YAMAHA

2009

⚠ Read this manual carefully before operating this vehicle.

OWNER'S SERVICE MANUAL

YZ125Y

LIT-11626-22-54

1C3-28199-14

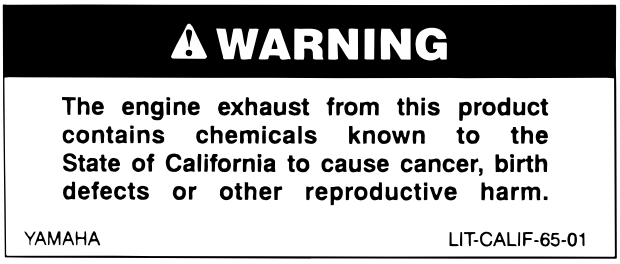

⚠ **Read this manual carefully before operating this vehicle. This manual should stay with this vehicle if it is sold.**

YZ125Y
OWNER'S SERVICE MANUAL
©2008 by Yamaha Motor Corporation, U.S.A.
1st Edition, April 2008
All rights reserved.
Any reprinting or unauthorized use
without the written permission of
Yamaha Motor Corporation U.S.A.
is expressly prohibited.
Printed in Japan
P/N. LIT-11626-22-54

INTRODUCTION

Congratulations on your purchase of a Yamaha YZ series. This model is the culmination of Yamaha's vast experience in the production of pacesetting racing machines. It represents the highest grade of craftsmanship and reliability that have made Yamaha a leader.
This manual explains operation, inspection, basic maintenance and tuning of your machine. If you have any questions about this manual or your machine, please contact your Yamaha dealer.

TIP

Yamaha continually seeks advancements in product design and quality. Therefore, while this manual contains the most current product information available at the time of printing, there may be minor discrepancies between your machine and this manual. If you have any questions concerning this manual, please consult your Yamaha dealer.

⚠ WARNING

PLEASE READ THIS MANUAL CAREFULLY AND COMPLETELY BEFORE OPERATING THIS MACHINE. DO NOT ATTEMPT TO OPERATE THIS MACHINE UNTIL YOU HAVE ATTAINED A SATISFACTORY KNOWLEDGE OF ITS CONTROLS AND OPERATING FEATURES AND UNTIL YOU HAVE BEEN TRAINED IN SAFE AND PROPER RIDING TECHNIQUES. REGULAR INSPECTIONS AND CAREFUL MAINTENANCE, ALONG WITH GOOD RIDING SKILLS, WILL ENSURE THAT YOU SAFETY ENJOY THE CAPABILITIES AND THE RELIABILITY OF THIS MACHINE.

IMPORTANT MANUAL INFORMATION

Particularly important information is distinguished in this manual by the following notations.

⚠

This is the safety alert symbol. It is used to alert you to potential personal injury hazards. Obey all safety messages that follow this symbol to avoid possible injury or death.

⚠ WARNING

A WARNING indicates a hazardous situation which, if not avoided, could result in death or serious injury.

NOTICE

A NOTICE indicates special precautions that must be taken to avoid damage to the vehicle or other property.

TIP

A TIP provides key information to make procedures easier or clearer.

SAFETY INFORMATION

THIS MACHINE IS DESIGNED STRICTLY FOR COMPETITION USE, ONLY ON A CLOSED COURSE. It is illegal for this machine to be operated on any public street, road, or highway. Off-road use on public lands may also be illegal. Please check local regulations before riding.

- THIS MACHINE IS TO BE OPERATED BY AN EXPERIENCED RIDER ONLY.
  Do not attempt to operate this machine at maximum power until you are totally familiar with its characteristics.
- THIS MACHINE IS DESIGNED TO BE RIDDEN BY THE OPERATOR ONLY.
  Do not carry passengers on this machine.
- ALWAYS WEAR PROTECTIVE APPAREL.
  When operating this machine, always wear an approved helmet with goggles or a face shield. Also wear heavy boots, gloves, and protective clothing. Always wear proper fitting clothing that will not be caught in any of the moving parts or controls of the machine.
- ALWAYS MAINTAIN YOUR MACHINE IN PROPER WORKING ORDER.
  For safety and reliability, the machine must be properly maintained. Always perform the pre-operation checks indicated in this manual. Correcting a mechanical problem before you ride may prevent an accident.
- GASOLINE IS HIGHLY FLAMMABLE.
  Always turn off the engine while refueling. Take care to not spill any gasoline on the engine or exhaust system. Never refuel in the vicinity of an open flame, or while smoking.
- GASOLINE CAN CAUSE INJURY.
  If you should swallow some gasoline, inhale excess gasoline vapors, or allow any gasoline to get into your eyes, contact a doctor immediately. If any gasoline spills onto your skin or clothing, immediately wash skin areas with soap and water, and change your clothes.
- ONLY OPERATE THE MACHINE IN AN AREA WITH ADEQUATE VENTILATION.
  Never start the engine or let it run for any length of time in an enclosed area. Exhaust fumes are poisonous. These fumes contain carbon monoxide, which by itself is odorless and colorless. Carbon monoxide is a dangerous gas which can cause unconsciousness or can be lethal.
- PARK THE MACHINE CAREFULLY; TURN OFF THE ENGINE.
  Always turn off the engine if you are going to leave the machine. Do not park the machine on a slope or soft ground as it may fall over.
- THE ENGINE, EXHAUST PIPE, MUFFLER, AND OIL TANK WILL BE VERY HOT AFTER THE ENGINE HAS BEEN RUN.
  Be careful not to touch them or to allow any clothing item to contact them during inspection or repair.
- PROPERLY SECURE THE MACHINE BEFORE TRANSPORTING IT.
  When transporting the machine in another vehicle, always be sure it is properly secured and in an upright position and that the fuel cock is in the "OFF" position. Otherwise, fuel may leak out of the carburetor or fuel tank.

YAMAHA MOTOR CORPORATION, U.S.A. YZ MOTORCYCLE LIMITED WARRANTY

Yamaha Motor Corporation, U.S.A. hereby warrants to the original retail purchaser that the following components equipped on new Yamaha YZ motorcycles purchased from an authorized Yamaha motorcycle dealer in the continental United States will be free from defects in materiel and workmanship for the period of time stated herein, subject to certain stated limitations. YZ components included under this warranty are the engine, frame, swingarm, and monoshock. It is understood that the balance of the YZ components are not covered by any warranty, expressed or implied. The balance of the components equipped on the unit are sold on an "as is" basis. This warranty applies to the original purchaser only and is not transferable.

THE PERIOD OF WARRANTY for the above-listed Yamaha YZ components as originally installed on the unit shall be thirty (30) days from the date of purchase.

MODELS EXCLUDED FROM WARRANTY include those used for non-Yamaha-authorized renting, leasing, or other commercial purposes.

DURING THE PERIOD OF WARRANTY any authorized Yamaha motorcycle dealer will, free of charge, repair or replace, at Yamaha's option, any part adjudged defective by Yamaha due to faulty workmanship or material from the factory. Parts used in warranty repairs will be warranted for the balance of the product's warranty period. All parts replaced under warranty become property of Yamaha Motor Corporation, U.S.A.

GENERAL EXCLUSIONS from this warranty shall include any failures caused by:

a. Installation of parts or accessories that are not qualitatively equivalent to genuine Yamaha parts.
b. Abnormal strain, neglect, or abuse.
c. Accident or collision damage.
d. Modification to original parts.
e. Lack of proper maintenance.
f . Damage due to improper transportation.

SPECIFIC EXCLUSIONS from this warranty shall include parts replaced due to normal wear or routine maintenance.

THE CUSTOMER'S RESPONSIBILITY under this warranty shall be to:

1. Operate and maintain the YZ as specified in the appropriate Owner's Service Manual, and
2. Give notice to an authorized Yamaha motorcycle dealer of any and all apparent defects within ten (10) days after discovery, and make the machine available at that time for inspection and repairs at such dealer's place of business.

YAMAHA MOTOR CORPORATION, U.S.A. MAKES NO OTHER WARRANTY OF ANY KIND, EXPRESSED OR IMPLIED. ALL IMPLIED WARRANTIES OF MERCHANTABILITY AND FITNESS FOR A PARTICULAR PURPOSE WHICH EXCEED THE OBLIGATIONS AND TIME LIMITS STATED IN THIS WARRANTY ARE HEREBY DISCLAIMED BY YAMAHA MOTOR CORPORATION, U.S.A. AND EXCLUDED FROM THIS WARRANTY.

SOME STATES DO NOT ALLOW LIMITATIONS ON HOW LONG AN IMPLIED WARRANTY LASTS, SO THE ABOVE LIMITATION MAY NOT APPLY TO YOU. ALSO EXCLUDED FROM THIS WARRANTY ARE ANY INCIDENTAL OR CONSEQUENTIAL DAMAGES INCLUDING LOSS OF USE. SOME STATES DO NOT ALLOW THE EXCLUSION OR LIMITATION OF INCIDENTAL OR CONSEQUENTIAL DAMAGES, SO THE ABOVE EXCLUSION MAY NOT APPLY TO YOU.

THIS WARRANTY GIVES YOU SPECIFIC LEGAL RIGHTS, AND YOU MAY ALSO HAVE OTHER RIGHTS WHICH VARY FROM STATE TO STATE.

YAMAHA MOTOR CORPORATION, U.S.A.
Post Office Box 6555
Cypress, California 90630

WARRANTY QUESTIONS AND ANSWERS

Q. What costs are my responsibility during the warranty period?

A. The customer's responsibility includes all costs of normal maintenance services, non-warranty repairs, accident and collision damage, and oil, oil filters, air filters, spark plugs, and brake shoes or pads.

Q. What are some examples of "abnormal" strain, neglect, or abuse?

A. These terms are general and overlap each other in areas. Specific examples include: Running the machine without oil; operating the machine with a broken or damaged part which causes another part to fail, damage or failure due to improper or careless transportation and or tie down; and so on. If you have any specific questions on operation or maintenance, please contact your dealer for advice.

Q. Does the warranty cover incidental costs such as towing or transportation due to a failure?

A. No. The warranty is limited to repair of the machine itself.

Q. May I perform any or all of the recommended maintenance shown in the Owner's Service Manual instead of having the dealer do them?

A. Yes, if you are a qualified mechanic and follow the procedures specified in the Owner's Service Manual. We do recommend, however, that items requiring special tools or equipment be done by a Yamaha motorcycle dealer.

Q. Will the warranty be void or canceled if I do not operate or maintain my new YZ exactly as specified in the Owner's Service Manual?

A. No. The warranty on a new motorcycle cannot be "voided" or "cancelled." **However, if a particular failure is caused by operation or maintenance other than as shown in the Owner's Service Manual, that failure may not be covered under warranty.**

Q. What responsibility does my dealer have under this warranty?

A. Each Yamaha motorcycle dealer is expected to:

1. Completely set up every new machine before sale.
2. Explain the operation, maintenance, and warranty requirements to your satisfaction at the time of sale, and upon your request at any later date.
   In addition, each Yamaha motorcycle dealer is held responsible for his setup, service and warranty repair work.

Q. Does the warranty on the engine include the carburetor, air filter, air box, and exhaust pipe?

A. No. The warranty covers only the engine components.

CUSTOMER SERVICE

If your machine requires warranty service, you must take it to any authorized Yamaha motorcycle dealer within the continental United States. Be sure to bring your warranty registration identification or other valid proof of the original date of purchase. If a question or problem arises regarding warranty, first contact the owner of the dealer-ship. Since all warranty matters are handled at the dealer level, this person is in the best position to help you. If you are still not satisfied and require additional assistance, please write:

YAMAHA MOTOR CORPORATION U.S.A.
CUSTOMER RELATIONS DEPARTMENT
P.O. Box 6555
Cypress, California 90630

When contacting Yamaha Motor Corporation, U.S.A. don't forget to include any important information such as names, addresses, model, V.I.N. (frame number), dates, and receipts.

CHANGE OF ADDRESS

The federal government requires each manufacturer of a motor vehicle to maintain a complete, up-to-date list of all first purchasers against the possibility of a safety-related defect and recall. This list is compiled from the purchase registrations sent to Yamaha Motor Corporation, U.S.A. by the selling dealer at the time of your purchase.

If you should move after you have purchased your new motorcycle, please advise us of your new address by sending a postcard listing your motorcycle model name, V.I.N. (frame number), dealer number (or deale's name) as it is shown on your warranty identification, your name and new mailing address. Mail to:

YAMAHA MOTOR CORPORATION, U.S.A.
WARRANTY DEPARTMENT
P.O.Box 6555
Cypress, California 90630

This will ensure that Yamaha Motor Corporation, U.S.A. has an up-to-date registration record in accordance with federal law.

F.I.M. MACHINE WEIGHTS

Weights of machines without fuel

The minimum weights for motocross machines are:

for the class 125 cc: minimum 88 kg (194 lb)
for the class 250 cc: minimum 98 kg (216 lb)
for the class 500 cc: minimum 102 kg (225 lb)

In modifying your machine (e.g., for weight reduction), take note of the above limits of weight.

HOW TO USE THIS MANUAL

FINDING THE REQUIRED PAGE

1. This manual consists of seven chapters; "General Information", "Specifications", "Regular inspection and adjustments", "Engine", "Chassis", "Electrical" and "Tuning"
2. The table of contents is at the beginning of the manual. Look over the general layout of the book before finding then required chapter and item.
   Bend the book at its edge, as shown, to find the required fore edge symbol mark and go to a page for required item and description.

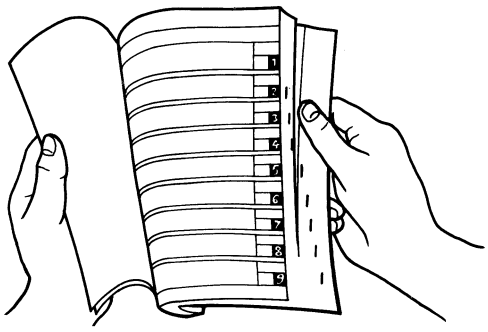

MANUAL FORMAT

All of the procedures in this manual are organized in a sequential, step-by-step format. The information has been complied to provide the mechanic with an easy to read, handy reference that contains comprehensive explanations of all disassembly, repair, assembly, and inspection operations.
In this revised format, the condition of a faulty component will precede an arrow symbol and the course of action required will follow the symbol, e.g.,

- Bearings
  Pitting/damage → Replace.

HOW TO READ DESCRIPTIONS

To help identify parts and clarify procedure steps, there are exploded diagrams at the start of each removal and disassembly section.

1. An easy-to-see exploded diagram "1" is provided for removal and disassembly jobs.
2. Numbers "2" are given in the order of the jobs in the exploded diagram. A number that is enclosed by a circle indicates a disassembly step.
3. An explanation of jobs and notes is presented in an easy-to-read way by the use of symbol marks "3". The meanings of the symbol marks are given on the next page.
4. A job instruction chart "4" accompanies the exploded diagram, providing the order of jobs, names of parts, notes in jobs, etc.
5. For jobs requiring more information, the step-by-step format supplements "5" are given in addition to the exploded diagram and job instruction chart.

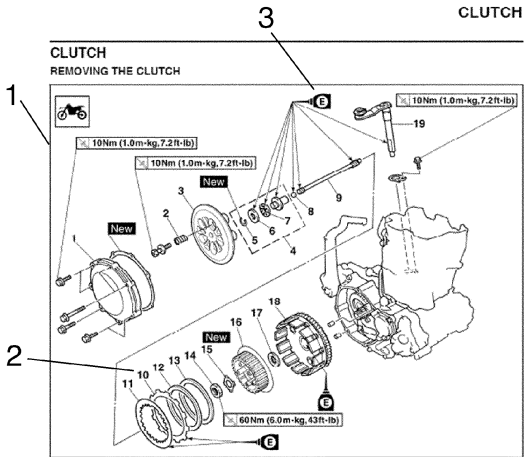

CLUTCH

CLUTCH

REMOVING THE CLUTCH

Order	Part name	Q'ty	Remarks
	Drain the engine oil.		Refer to "ENGINE OIL REPLACEMENT" section in the CHAPTER 3.
	Brake pedal		Refer to "ENGINE REMOVAL" section.
	Clutch cable		Disconnect at engine side.
1	Clutch cover	1	
2	Clutch spring	5	
3	Pressure plate	1	
4	Push rod 1	1	
5	Circlip	1	
6	Washer	1	
7	Bearing	1	
8	Ball	1	
9	Push rod 2	1	
10	Friction plate	9	

5

REMOVING THE CLUTCH BOSS

1. Remove:
   - Nut "1"
   - Lock washer "2"
   - Clutch boss "3"

NOTE:
Straighten the lock washer tab and use the clutch holding tool "4" to hold the clutch boss.

Clutch holding tool: YM-91042/90890-04086

A. For USA and CDN
B. Except for USA and CDN

CHECKING THE CLUTCH HOUSING AND BOSS

1. Inspect:
   - Clutch housing "1"
     Cracks/wear/damage → Replace.
   - Clutch boss "2"
     Scoring/wear/damage → Replace.

CHECKING THE PRIMARY DRIVEN GEAR

1. Check:
   - Circumferential play
     Free play exists → Replace.
   - Gear teeth "a"
     Wear/damage → Replace.

CHECKING THE CLUTCH SPRING

1. Measure:
   - Clutch spring free length "a"
     Out of specification → Replace springs as a set.

Clutch spring free length: 37.0 mm (1.46 in) <Limit>: 36.0 mm (1.42 in)

CHECKING THE FRICTION PLATES

1. Measure:
   - Friction plate thickness
     Out of specification → Replace friction plate as a set.
     Measure at all four points.

Friction plate thickness: 2.9–3.1 mm (0.114–0.122 in) <Limit>: 2.7 mm (0.106 in)

ILLUSTRATED SYMBOLS (Refer to the illustration)

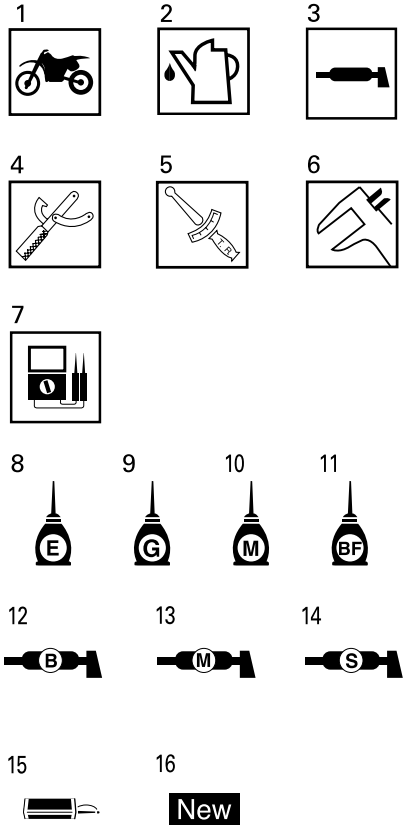

Illustrated symbols "1" to "7" are used to identify the specifications appearing in the text.

1. With engine mounted
2. Filling fluid
3. Lubricant
4. Special tool
5. Tightening
6. Specified value, Service limit
7. Resistance (Ω), Voltage (V), Electric current (A)

Illustrated symbols "8" to "14" in the exploded diagrams indicate grade of lubricant and location of lubrication point.

8. Apply engine mixing oil
9. Apply transmission oil
10. Apply molybdenum disulfide oil
11. Apply brake fluid
12. Apply lightweight lithium-soap base grease
13. Apply molybdenum disulfide grease
14. Apply silicone grease

Illustrated symbols "15" to "16" in the exploded diagrams indicate where to apply a locking agent and where to install new parts.

15. Apply locking agent (LOCTITE®)
16. Use new one

TABLE OF CONTENTS

GENERAL INFORMATION	1
SPECIFICATIONS	2
REGULAR INSPECTION AND ADJUSTMENTS	3
ENGINE	4
CHASSIS	5
ELECTRICAL	6
TUNING	7

CONTENTS

CHAPTER 1
GENERAL INFORMATION

LOCATION OF IMPORTANT LABELS 1-1
DESCRIPTION 1-2
MACHINE IDENTIFICATION 1-3
INCLUDED PARTS 1-4
IMPORTANT INFORMATION 1-5
CHECKING OF CONNECTION 1-7
SPECIAL TOOLS 1-8
CONTROL FUNCTIONS 1-11
STARTING AND BREAK-IN 1-13
TORQUE-CHECK POINTS 1-15
CLEANING AND STORAGE 1-16

CHAPTER 2
SPECIFICATIONS

GENERAL SPECIFICATIONS 2-1
MAINTENANCE SPECIFICATIONS 2-3
TIGHTENING TORQUES 2-9
CABLE ROUTING DIAGRAM 2-15

CHAPTER 3
REGULAR INSPECTION AND ADJUSTMENTS

MAINTENANCE INTERVALS 3-1
PRE-OPERATION INSPECTION AND MAINTENANCE 3-5
ENGINE 3-6
CHASSIS 3-13
ELECTRICAL 3-29

CHAPTER 4
ENGINE

SEAT, FUEL TANK AND SIDE COVERS . 4-2
EXHAUST PIPE AND SILENCER 4-4
RADIATOR..... 4-6
CARBURETOR AND REED VALVE 4-9
CYLINDER HEAD, CYLINDER AND
PISTON 4-17
CLUTCH..... 4-28
KICK SHAFT AND SHIFT SHAFT..... 4-34
YPVS GOVERNOR 4-42
WATER PUMP 4-45
CDI MAGNETO 4-48
ENGINE REMOVAL..... 4-51
CRANKCASE AND CRANKSHAFT..... 4-55
TRANSMISSION, SHIFT CAM AND
SHIFT FORK 4-62

CHAPTER 5
CHASSIS

FRONT WHEEL AND REAR WHEEL 5-2
FRONT BRAKE AND REAR BRAKE..... 5-9
FRONT FORK 5-23
HANDLEBAR..... 5-36
STEERING 5-43
SWINGARM 5-48
REAR SHOCK ABSORBER..... 5-55

CHAPTER 6
ELECTRICAL

ELECTRICAL COMPONENTS AND WIRING DIAGRAM 6-2
IGNITION SYSTEM 6-4

CHAPTER 7
TUNING

ENGINE 7-1
CHASSIS 7-10

GENERAL INFORMATION

LOCATION OF IMPORTANT LABELS

Please read the following important labels carefully before operating this vehicle.

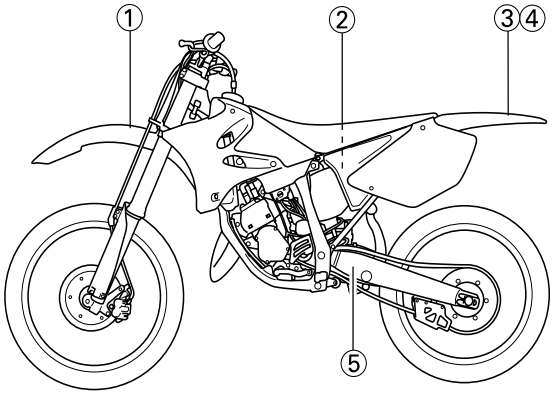

1

Use premium unleaded gasoline / oil premix only.

3XJ-2415E-A1

2

⚠ WARNING

This unit contains high pressure nitrogen gas.
Mishandling can cause explosion.
- Read owner's manual for instructions.
- Do not incinerate, puncture or open.

4AA-22259-80

3

⚠ WARNING

- BEFORE YOU OPERATE THIS VEHICLE, READ THE OWNER'S MANUAL AND ALL LABELS.
- NEVER CARRY A PASSENGER. You increase your risk of losing control if you carry a passenger.
- NEVER OPERATE THIS VEHICLE ON PUBLIC ROADS. You can collide with another vehicle if you operate this vehicle on a public road.
- ALWAYS WEAR AN APPROVED MOTORCYCLE HELMET, eye protection, and protective clothing.
- EXPERIENCED RIDER ONLY.

5PA-2118K-00

4

⚠ WARNING

Riding as a passenger can cause the vehicle to go out of control.

Loss of control can cause a collision or rollover, which can result in severe injury or death.

NEVER ride as a passenger.

3XJ-2151H-A1

5

TIRE INFORMATION

Cold tire normal pressure should be set as follows.
FRONT: 100kPa, {1.00kgf/cm^2}, 15psi
REAR : 100kPa, {1.00kgf/cm^2}, 15psi

3RV-21668-A0

DESCRIPTION

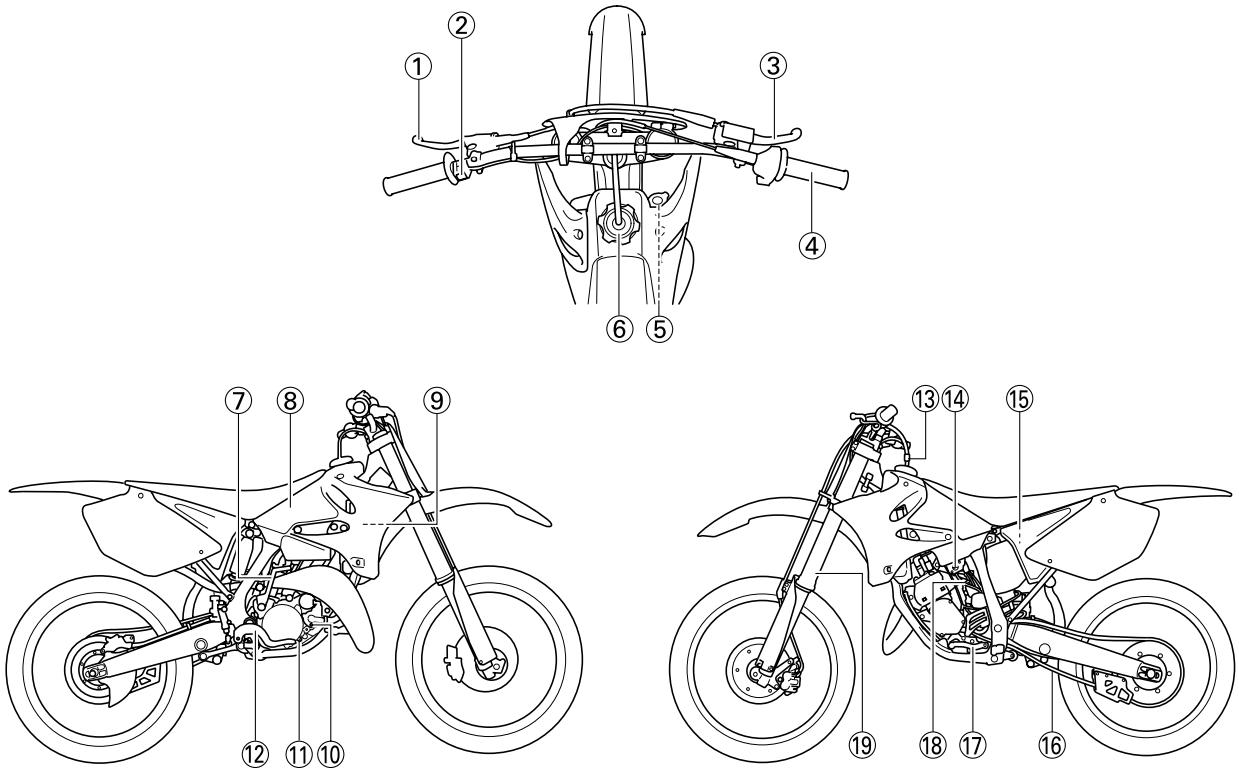

1. Clutch lever
2. Engine stop switch
3. Front brake lever
4. Throttle grip
5. Radiator cap
6. Fuel tank cap
7. Kickstarter crank
8. Fuel tank
9. Radiator
10. Coolant drain bolt
11. Check bolt (Transmission oil level)
12. Rear brake pedal
13. Valve joint
14. Fuel cock
15. Air filter
16. Drive chain
17. Shift pedal
18. Starter knob
19. Front fork

TIP

• The machine you have purchased may differ slightly from those shown in the following.
• Designs and specifications are subject to change without notice.

MACHINE IDENTIFICATION

There are two significant reasons for knowing the serial number of your machine:

1. When ordering parts, you can give the number to your Yamaha dealer for positive identification of the model you own.
2. If your machine is stolen, the authorities will need the number to search for and identify your machine.

VEHICLE IDENTIFICATION NUMBER

The vehicle identification number "1" is stamped on the right of the steering head pipe.

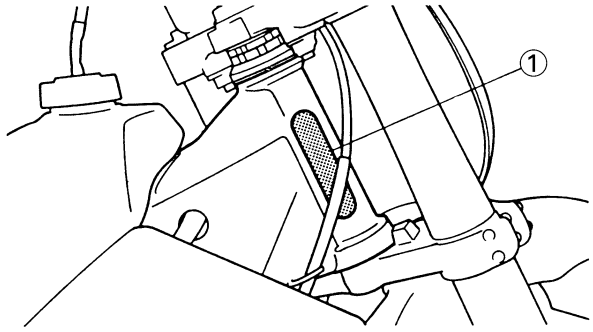

ENGINE SERIAL NUMBER

The engine serial number "1" is stamped into the elevated part of the right-side of the engine.

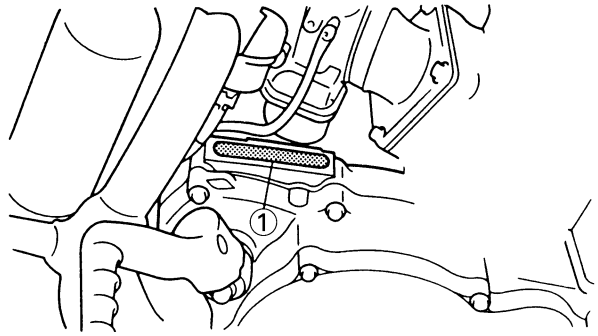

MODEL LABEL

The model label "1" is affixed to the frame under the rider's seat. This information will be needed to order spare parts.

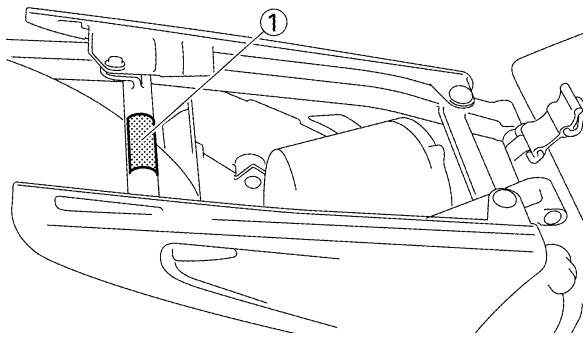

INCLUDED PARTS

DETACHABLE SIDESTAND

This sidestand "1" is used to support only the machine when standing or transporting it.

⚠ WARNING

- **Never apply additional force to the sidestand.**
- **Remove this sidestand before starting out.**

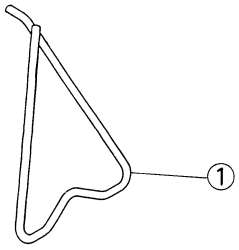

VALVE JOINT

This valve joint "1" prevents fuel from flowing out and is installed to the fuel tank breather hose.

NOTICE

In this installation, make sure the arrow faces the fuel tank and also downward.

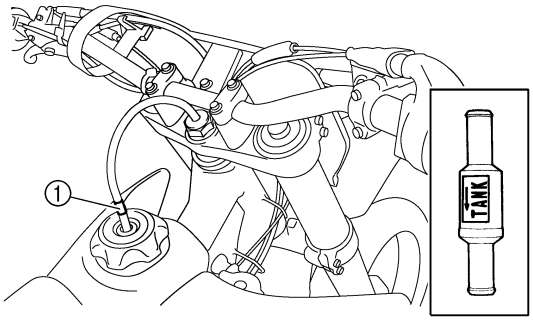

COLLAR (tool for YPVS)

This collar "1" is used to remove and install the push rod of the engine.

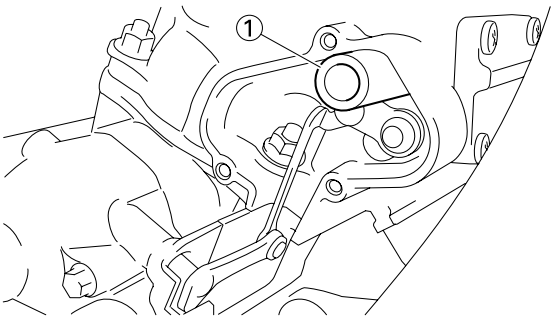

NIPPLE WRENCH

This nipple wrench "1" is used to tighten the spoke.

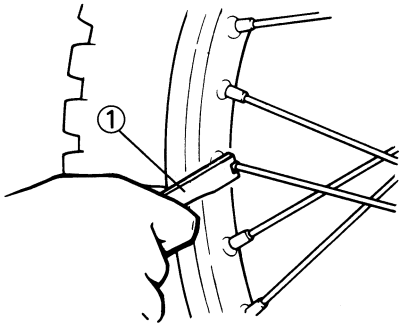

IMPORTANT INFORMATION

PREPARATION FOR REMOVAL AND DISASSEMBLY

1. Remove all dirt, mud, dust, and foreign material before removal and disassembly.
   - When washing the machine with high pressured water, cover the parts follows.
     Silencer exhaust port
     Side cover air intake port
     Crankcase cover hole at the bottom
     Water pump housing hole at the bottom
     End of each hose



2. Use proper tools and cleaning equipment. Refer to "SPECIAL TOOLS" section.

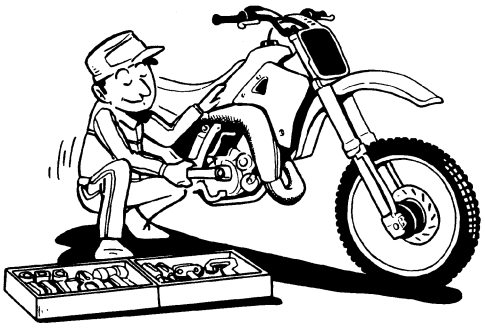

3. When disassembling the machine, keep mated parts together. They include gears, cylinders, pistons, and other mated parts that have been "mated" through normal wear. Mated parts must be reused as an assembly or replaced.

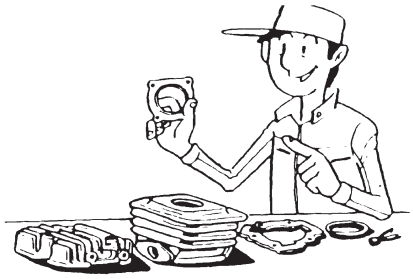

4. During the machine disassembly, clean all parts and place them in trays in the order of disassembly. This will speed up assembly time and help assure that all parts are correctly reinstalled.



5. Keep away from fire.

ALL REPLACEMENT PARTS

1. We recommend to use Yamaha genuine parts for all replacements. Use oil and/or grease recommended by Yamaha for assembly and adjustment.

GASKETS, OIL SEALS AND O-RINGS

1. All gaskets, oil seals, and O-rings should be replaced when an engine is overhauled. All gasket surfaces, oil seal lips, and O-rings must be cleaned.
2. Properly oil all mating parts and bearings during reassembly. Apply grease to the oil seal lips.

LOCK WASHERS/PLATES AND COTTER PINS

1. All lock washers/plates "1" and cotter pins must be replaced when they are removed. Lock tab(s) should be bent along the bolt or nut flat(s) after the bolt or nut has been properly tightened.

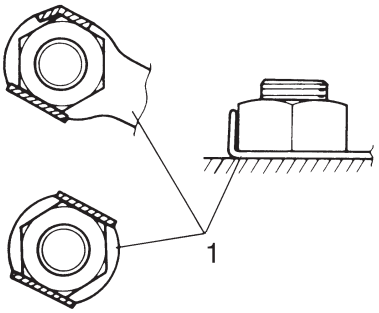

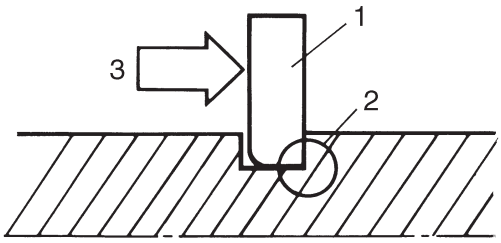

BEARINGS AND OIL SEALS

1. Install the bearing(s) "1" and oil seal(s) "2" with their manufacturer's marks or numbers facing outward. (In other words, the stamped letters must be on the side exposed to view.) When installing oil seal(s), apply a light coating of lightweight lithium base grease to the seal lip(s). Oil the bearings liberally when installing.

NOTICE

Do not use compressed air to spin the bearings dry. This causes damage to the bearing surfaces.

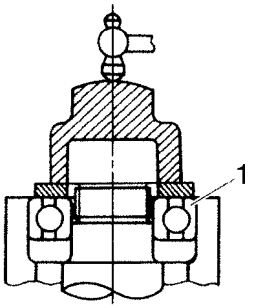

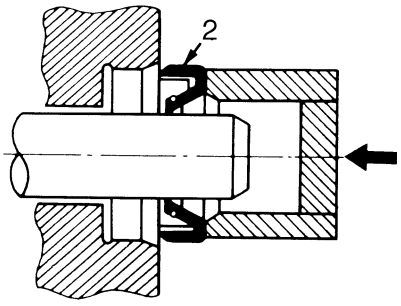

CIRCLIPS

1. All circlips should be inspected carefully before reassembly. Always replace piston pin clips after one use. Replace distorted circlips. When installing a circlip "1", make sure that the sharp-edged corner "2" is positioned opposite to the thrust "3" it receives. See the sectional view.

CHECKING OF CONNECTION

Dealing with stains, rust, moisture, etc. on the connector.

1. Disconnect:
   • Connector
2. Dry each terminal with an air blower.

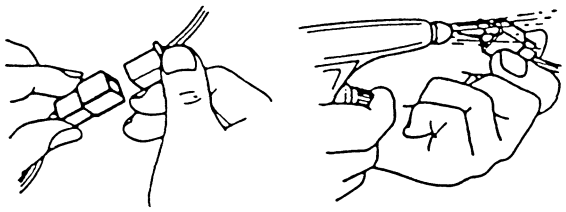

3. Connect and disconnect the connector two or three times.
4. Pull the lead to check that it will not come off.
5. If the terminal comes off, bend up the pin "1" and reinsert the terminal into the connector.

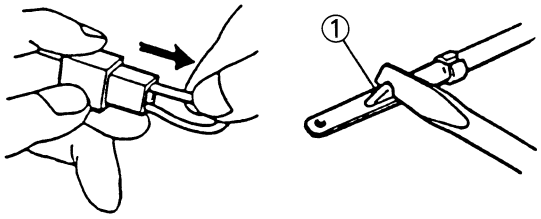

6. Connect:
   • Connector

TIP

The two connectors "click" together.

7. Check for continuity with a tester.

TIP

- If there in no continuity, clean the terminals.
- Be sure to perform the steps 1 to 7 listed above when checking the wire harness.
- For a field remedy, use a contact revitalizer available on the market.
- Use the tester on the connector as shown.

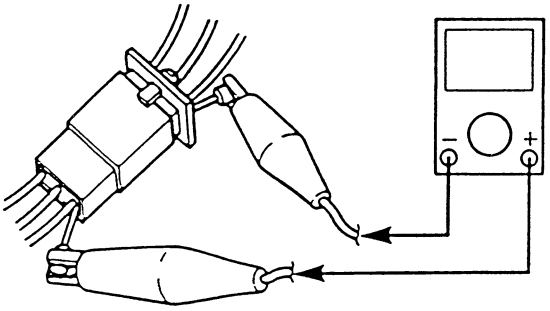

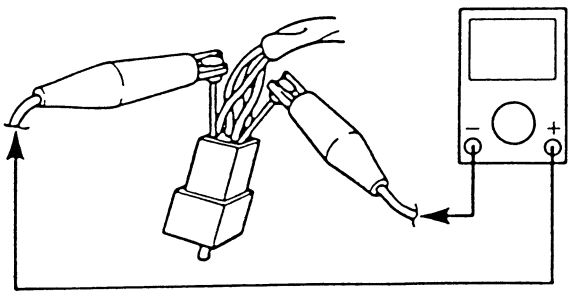

SPECIAL TOOLS

The proper special tools are necessary for complete and accurate tune-up and assembly. Using the correct special tool will help prevent damage caused by the use of improper tools or improvised techniques. The shape and part number used for the special tool differ by country, so two types are provided. Refer to the list provided to avoid errors when placing an order.

TIP

- For U.S.A. and Canada, use part number starting with "YM-", "YU-" or "ACC-".
- For others, use part number starting with "90890-".

Tool name/Part number	How to use	Illustration
Crankcase separating tool YU-1135-A, 90890-01135	These tool is used to remove the crankshaft from either case.	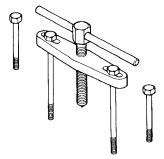
Flywheel puller YM-1189, 90890-01189	This tool is used to remove the flywheel magneto.	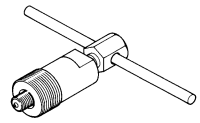
Rotor holding tool YU-1235, 90890-01235	This tool is used when loosening or tightening the flywheel magneto securing nut.	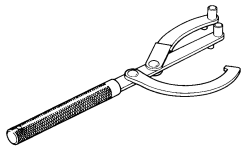
Dial gauge and stand YU-3097, 90890-01252 Stand YU-1256	These tools are used to check each part for runout or bent.	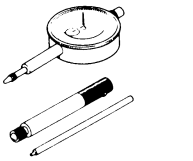 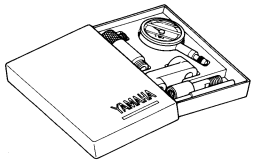
Crankshaft installing tool Crankshaft installing pot YU-90050, 90890-01274 Crankshaft installing bolt YU-90050, 90890-01275 Adapter YU-90063, 90890-01278 Adapter YU-01499, 90890-01499	These tools are used to install the crankshaft.	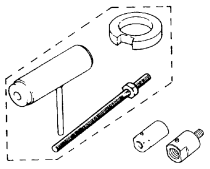 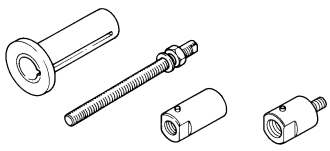

Tool name/Part number	How to use	Illustration
Piston pin puller set YU-1304, 90890-01304	This tool is used to remove the piston pin.	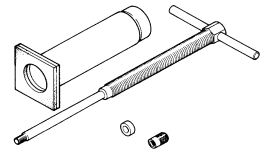
Fuel level gauge "1" YM-1312-A, 90890-01312 Fuel level gauge adaptor "2" YM-01470, 90890-01470	This gauge is used to measure the fuel level in the float chamber.	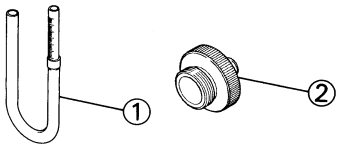
Radiator cap tester YU-24460-01, 90890-01325 Radiator cap tester adapter YU-33984, 90890-01352	These tools are used for checking the cooling system.	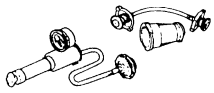 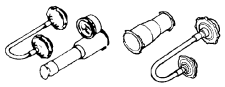
Flywheel puller YU-33270-B, 90890-01362	These tool is used to split the crankcase.	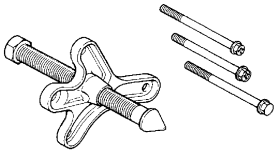 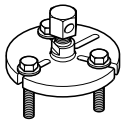
Steering nut wrench YU-33975, 90890-01403	This tool is used when tighten the steering ring nut to specification.	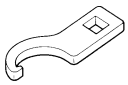
Cap bolt wrench YM-01500, 90890-01500	This tool is used to loosen or tighten the base valve.	
Cap bolt ring wrench YM-01501, 90890-01501	This tool is used to loosen or tighten the damper assembly.	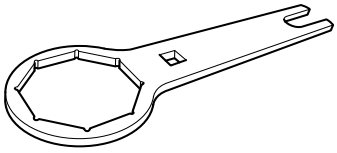

Tool name/Part number	How to use	Illustration
Fork seal driver YM-A0948, 90890-01502	This tool is used when install the fork oil seal.	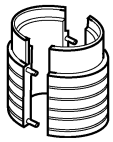 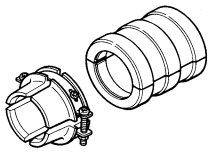
Spoke nipple wrench YM-01521, 90890-01521	This tool is used to tighten the spoke.	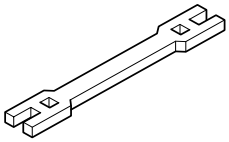
Pocket tester YU-3112-C, 90890-03112	Use this tool to inspect the coil resistance, output voltage and amperage.	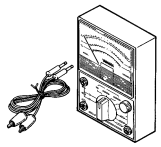
Clutch holding tool YM-91042, 90890-04086	This tool is used to hold the clutch when removing or installing the clutch boss securing nut.	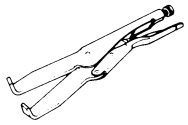 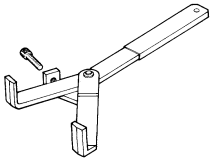
Dynamic spark tester YM-34487 Ignition checker 90890-06754	This instrument is necessary for checking the ignition system components.	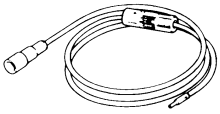 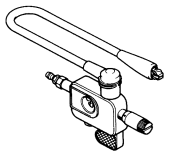
YAMAHA Bond No. 1215 (ThreeBond® No. 1215) 90890-85505	This sealant (Bond) is used for crankcase mating surface, etc.	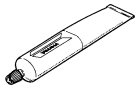

CONTROL FUNCTIONS

ENGINE STOP SWITCH
The engine stop switch "1" is located on the left handlebar. Continue pushing the engine stop switch till the engine comes to a stop.

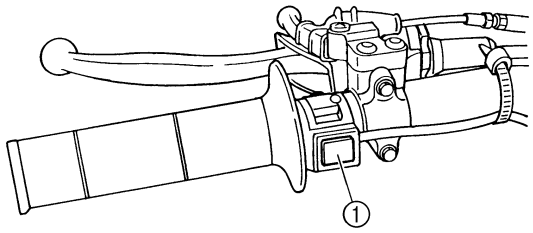

CLUTCH LEVER
The clutch lever "1" is located on the left handlebar; it disengages or engages the clutch. Pull the clutch lever to the handlebar to disengage the clutch, and release the lever to engage the clutch. The lever should be pulled rapidly and released slowly for smooth starts.

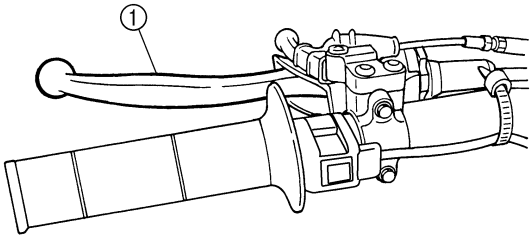

SHIFT PEDAL
The gear ratios of the constant-mesh 6 speed transmission are ideally spaced. The gears can be shifted by using the shift pedal "1" on the left side of the engine.

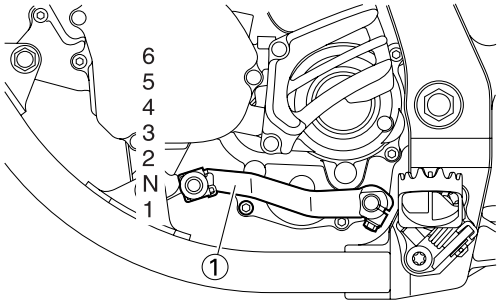

KICKSTARTER CRANK
Rotate the kickstarter crank "1" away from the engine. Push the starter down lightly with your foot until the gears engage, then kick smoothly and forcefully to start the engine. This model has a primary kickstarter crank so the engine can be started in any gear if the clutch is disengaged. In normal practices, however, shift to neutral before starting.

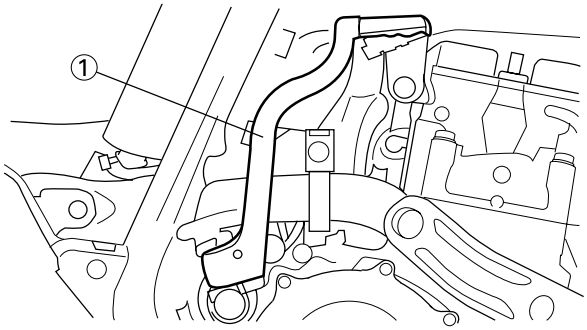

THROTTLE GRIP
The throttle grip "1" is located on the right handlebar; it accelerates or decelerates the engine. For acceleration, turn the grip toward you; for deceleration, turn it away from you.

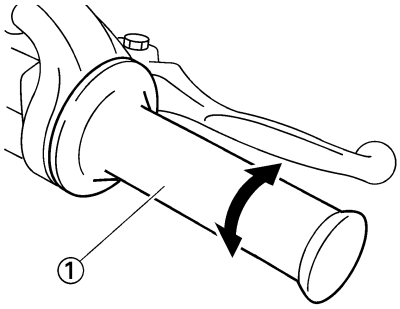

FRONT BRAKE LEVER
The front brake lever "1" is located on the right handlebar. Pull it toward the handlebar to activate the front brake.

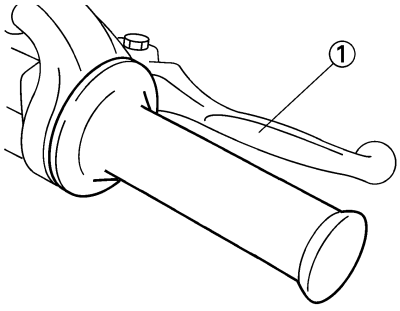

REAR BRAKE PEDAL

The rear brake pedal "1" is located on the right side of the machine. Press down on the brake pedal to activate the rear brake.



FUEL COCK

The fuel cock supplies fuel from the tank to carburetor and also filters the fuel. The fuel cock has the two positions:

OFF:

With the lever in this position, fuel will not flow. Always return the lever to this position when the engine is not running.

ON:

With the lever in this position, fuel flows to the carburetor. Normal riding is done with the lever in this position.

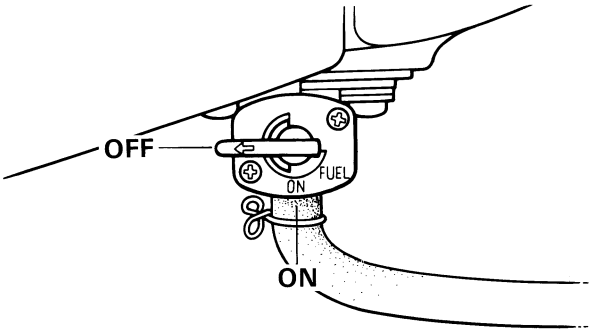

STARTER KNOB (CHOKE)

When cold, the engine requires a richer air-fuel mixture for starting. A separate starter circuit, which is controlled by the starter knob "1", supplies this mixture. Pull the starter knob out to open the circuit for starting. When the engine has warmed up, push it in to close the circuit.

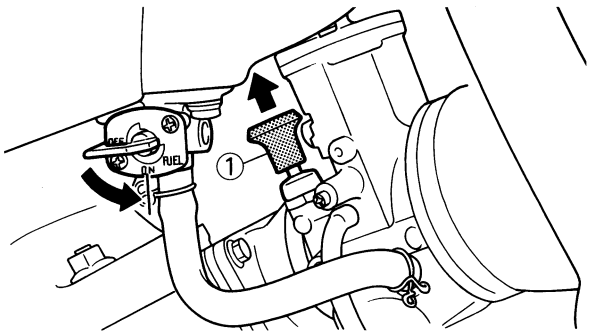

STARTING AND BREAK-IN

FUEL

Mix oil with the gas at the ratio specified below. Always use fresh, name-brand gasoline, and mix the oil and gas the day of the race. Do not use premix that is more than a few hours old.

Recommended fuel:
Premium unleaded gasoline only with a research octane number of 95 or higher.

TIP

If knocking or pinging occurs, use a different brand of gasoline or higher octane grade.

NOTICE

Never mix two types of oil in the same batch; clotting of the oil could result. If you wish to change oil types, be sure to drain the fuel tank and the carburetor float bowl of old premix prior to filling with the new type.

Fuel tank capacity:
8.0 L (1.76 Imp gal, 2.11 US gal)

Mixing oil:
Recommended oil:
Yamalube "2-R"
(Yamalube racing 2-cycle oil)
Mixing ratio: 30:1
If unavailable, use an equivalent type of oil.

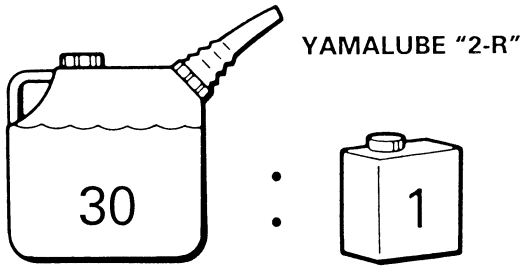

HANDLING NOTE

NOTICE

Before starting the machine, perform the checks in the pre-operation check list.

⚠ WARNING

Never start or run the engine in a closed area. The exhaust fumes are poisonous; they can cause loss of consciousness and death in a very short time. Always operate the machine in a well-ventilated area.

AIR FILTER MAINTENANCE

According to "CLEANING THE AIR FILTER ELEMENT" section in the CHAPTER 3, apply the foam-air-filter oil or its equivalent to the element. (Excess oil in the element may adversely affect engine starting.)

STARTING A COLD ENGINE

1. Shift the transmission into neutral.
2. Turn the fuel cock to "ON" and full open the starter knob (CHOKE).
3. With the throttle completely closed start the engine by kicking the kick starter forcefully with firm stroke.
4. Run the engine at idle or slightly higher until it warms up: this usually takes about one or two minutes.
5. The engine is warmed up when it responds normally to the throttle with the starter knob (CHOKE) turned off.

NOTICE

Do not warm up the engine for extended periods of time.

STARTING A WARM ENGINE

Do not operate the starter knob (CHOKE). Open the throttle slightly and start the engine by kicking the kick starter forcefully with firm stroke.

NOTICE

Observe the following break-in procedures during initial operation to ensure optimum performance and avoid engine damage.

BREAK-IN PROCEDURES

1. Before starting the engine, fill the fuel tank with a break-in oil-fuel mixture as follows.

Mixing oil:
Yamalube "2-R"
Mixing ratio:
15:1

2. Perform the pre-operation checks on the machine.
3. Start and warm up the engine. Check the idle speed, and check the operation of the controls and the "ENGINE STOP" button.
4. Operate the machine in the lower gears at moderate throttle openings for five to eight minutes. Stop and check the spark plug condition; it will show a rich condition during break-in.

5. Allow the engine to cool. Restart the engine and operate the machine as in the step above for five minutes. Then, very briefly shift to the higher gears and check full-throttle response. Stop and check the spark plug.
6. After again allowing the engine to cool, restart and run the machine for five more minutes. Full throttle and the higher gears may be used, but sustained full-throttle operation should be avoided. Check the spark plug condition.
7. Allow the engine to cool, remove the top end, and inspect the piston and cylinder. Remove any high spots on the piston with #600 grit wet sandpaper. Clean all components and carefully reassemble the top end.
8. Drain the break-in oil-fuel mixture from the fuel tank and refill with the specified mix.
9. Restart the engine and check the operation of the machine throughout its entire operating range. Stop and check the spark plug condition. Restart the machine and operate it for about 10 to 15 more minutes. The machine will now be ready to race.

NOTICE

- **After the break-in or before each race, you must check the entire machine for loose fittings and fasteners as per "TORQUE-CHECK POINTS". Tighten all such fasteners as required.**
- **When any of the following parts have been replaced, they must be broken in.**
  CYLINDER AND CRANKSHAFT:
  About one hour of break-in operation is necessary.
  PISTON, RING AND GEARS:
  These parts require about 30 minutes of break-in operation at half-throttle or less. Observe the condition of the engine carefully during operation.

TORQUE-CHECK POINTS

Frame construction				Frame to rear frame
		Combined seat and fuel tank		Fuel tank to frame
Exhaust system				Silencer to rear frame
Engine mounting				Frame to engine
				Engine bracket to engine
				Engine bracket to frame
Steering		Steering stem to handlebar		Steering stem to frame
				Steering stem to upper bracket
				Upper bracket to handlebar
Suspension	Front	Steering stem to front fork		Front fork to upper bracket
				Front fork to lower bracket
	Rear	For link type		Assembly of links
				Link to frame
				Link to rear shock absorber
				Link to swingarm
		Installation of rear shock absorber		Rear shock absorber to frame
		Installation of swingarm		Tightening of pivot shaft
Wheel		Installation of wheel	Front	Tightening of wheel axle
				Tightening of axle holder
			Rear	Tightening of wheel axle
				Wheel to rear wheel sprocket
Brake			Front	Brake caliper to front fork
				Brake disc to wheel
				Tightening of union bolt
				Brake master cylinder to handlebar
				Tightening of bleed screw
				Tightening of brake hose holder
			Rear	Brake pedal to frame
				Brake disc to wheel
				Tightening of union bolt
				Brake master cylinder to frame
				Tightening of bleed screw
				Tightening of brake hose holder
Fuel system				Fuel tank to fuel cock

TIP
Concerning the tightening torque, refer to "TIGHTENING TORQUES" section in the CHAPTER 2.

CLEANING AND STORAGE

CLEANING

Frequent cleaning of your machine will enhance its appearance, maintain good overall performance, and extend the life of many components.

1. Before washing the machine, block off the end of the exhaust pipe to prevent water from entering. A plastic bag secured with a rubber band may be used for this purpose.
2. If the engine is excessively greasy, apply some degreaser to it with a paint brush. Do not apply degreaser to the chain, sprockets, or wheel axles.
3. Rinse the dirt and degreaser off with a garden hose; use only enough pressure to do the job.

NOTICE

Excessive hose pressure may cause water seepage and contamination of wheel bearings, front forks, brakes and transmission seals. Many expensive repair bills have resulted from improper high pressure detergent applications such as those available in coin-operated car washers.

4. After the majority of the dirt has been hosed off, wash all surfaces with warm water and a mild detergent. Use an old toothbrush to clean hard-to-reach places.
5. Rinse the machine off immediately with clean water, and dry all surfaces with a soft towel or cloth.
6. Immediately after washing, remove excess water from the chain with a paper towel and lubricate the chain to prevent rust.
7. Clean the seat with a vinyl upholstery cleaner to keep the cover pliable and glossy.
8. Automotive wax may be applied to all painted or chromed surfaces. Avoid combination cleaner-waxes, as they may contain abrasives.
9. After completing the above, start the engine and allow it to idle for several minutes.

STORAGE

If your machine is to be stored for 60 days or more, some preventive measures must be taken to avoid deterioration. After cleaning the machine thoroughly, prepare it for storage as follows:

1. Drain the fuel tank, fuel lines, and the carburetor float bowl.
2. Remove the spark plug, pour a tablespoon of SAE 10W-40 motor oil in the spark plug hole, and reinstall the plug. With the engine stop switch pushed in, kick the engine over several times to coat the cylinder walls with oil.
3. Remove the drive chain, clean it thoroughly with solvent, and lubricate it. Reinstall the chain or store it in a plastic bag tied to the frame.
4. Lubricate all control cables.
5. Block the frame up to raise the wheels off the ground.
6. Tie a plastic bag over the exhaust pipe outlet to prevent moisture from entering.
7. If the machine is to be stored in a humid or salt-air environment, coat all exposed metal surfaces with a film of light oil. Do not apply oil to rubber parts or the seat cover.

TIP

Make any necessary repairs before the machine is stored.

SPECIFICATIONS
GENERAL SPECIFICATIONS

Model name:	YZ125Y (USA, CDN) YZ125 (EUROPE, ZA) YZ125Y (AUS, NZ)	
Model code number:	1C3H (USA, CDN) 1C3J (EUROPE) 1C3L (AUS, NZ, ZA)	
Dimensions:	USA, AUS, NZ, ZA	EUROPE, CDN
Overall length	2,135 mm (84.1 in)	2,139 mm (84.2 in)
Overall width	827 mm (32.6 in)	←
Overall height	1,315 mm (51.8 in)	1,318 mm (51.9 in)
Seat height	997 mm (39.3in)	998 mm (39.3 in)
Wheelbase	1,443 mm (56.8 in)	←
Minimum ground clearance	386 mm (15.2 in)	388 mm (15.3 in)
Dry weight:		
Without oil and fuel	86.0kg (189.6 lb)	
Engine:		
Engine type	Liquid cooled 2-stroke, gasoline	
Cylinder arrangement	Single cylinder, forward inclined	
Displacement	124 cm^3 (4.36 Imp oz, 4.19 US oz)	
Bore × stroke	54 × 54.5 mm (2.126 × 2.146 in)	
Compression ratio	8.6–10.7 : 1	
Starting system	Kick starter	
Lubrication system:	Premix (30 : 1)(Yamalube 2-R)	
Oil type or grade (2-stroke):		
Transmission oil	Yamalube 4 (10W-40) or SAE 10W-40 type SE motor oil	
Periodic oil change	0.66 L (0.58 Imp qt, 0.69 US qt)	
Total amount	0.70 L (0.62 Imp qt, 0.74 US qt)	
Coolant capacity (including all routes):	0.9 L (0.79 Imp qt, 0.95 US qt)	
Air filter:	Wet type element	
Fuel:		
Type	Premium unleaded gasoline only with a research octane number of 95 or higher.	
Tank capacity	8.0 L (1.76 Imp gal, 2.11 US gal)	
Carburetor:		
Type/Manufacturer	TMX χ 38SS/MIKUNI	
Spark plug:		
Type/Manufacturer	BR9EVX/NGK (resistance type)	
Gap	0.6–0.7 mm (0.024–0.028 in)	

Clutch type:	Wet, multiple-disc	
Transmission:		
Primary reduction system	Gear	
Primary reduction ratio	64/19 (3.368)	
Secondary reduction system	Chain drive	
Secondary reduction ratio	48/13 (3.692)	
Transmission type	Constant mesh, 6-speed	
Operation	Left foot operation	
Gear ratio:		
1st	31/13 (2.385)	
2nd	29/15 (1.933)	
3rd	27/17 (1.588)	
4th	23/17 (1.353)	
5th	24/20 (1.200)	
6th	23/21 (1.095)	
Chassis:	USA, ZA, AUS, NZ	EUROPE, CDN
Frame type	Semi double cradle	←
Caster angle	25.5 °	25.6 °
Trail	105 mm (4.13 in)	107 mm (4.21 in)
Tire:		
Type	With tube	
Size (front)	80/100-21 51M	
Size (rear)	100/90-19 57M	
Tire pressure (front and rear)	100 kPa (1.0 kgf/cm^2, 15 psi)	
Brake:		
Front brake type	Single disc brake	
Operation	Right hand operation	
Rear brake type	Single disc brake	
Operation	Right foot operation	
Suspension:		
Front suspension	Telescopic fork	
Rear suspension	Swingarm (link type monocross suspension)	
Shock absorber:		
Front shock absorber	Coil spring/oil damper	
Rear shock absorber	Coil spring/gas, oil damper	
Wheel travel:		
Front wheel travel	300 mm (11.8 in)	
Rear wheel travel	315 mm (12.4 in)	
Electrical:		
Ignition system	CDI magneto	

MAINTENANCE SPECIFICATIONS

ENGINE

Item	Standard	Limit
Cylinder head:		
Combustion chamber capacity	8.4 cm^3 (0.296 Imp oz, 0.284 US oz)	----
Warp limit	----	0.03 mm (0.0012 in)
Cylinder:		
Bore size	54.000–54.014 mm (2.1260–2.1265 in)	54.1 mm (2.130 in)
Taper limit	----	0.05 mm (0.0020 in)
Out of round limit	----	0.01 mm (0.0004 in)
Piston:		
Piston size/	53.957–53.972 mm (2.1243–2.1249 in)	----
Measuring point "H"	17.5 mm (0.69 in)	----
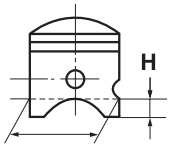		
Piston clearance	0.040–0.045 mmm (0.0016–0.0018 in)	0.1 mm (0.004 in)
Piston offset	0.5 mm (0.019 in)/EX-side	----
Piston pin:		
Piston pin outside diameter	14.995–15.000 mm (0.5904–0.5906 in)	14.975 mm (0.5896 in)
Piston ring:		
Sectional sketch	Plain	----
	B=1.0 mm (0.039 in)	----
	T=2.35 mm (0.093 in)	----
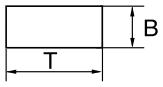		
End gap (installed)	0.5–0.7 mm (0.020–0.028 in)	1.2 mm (0.047 in)
Side clearance (installed)	0.035–0.070 mm (0.0014~0.0028 in)	0.1 mm (0.004 in)

Item	Standard	Limit
Crankshaft:		
Crank width "A"	55.90–55.95 mm (2.201–2.203 in)	----
Runout limit "C"	0.03 mm (0.0012 in)	0.05 mm (0.0020 in)
Connecting rod big end side clearance "D"	0.06–0.64 mm (0.002–0.025 in)	----
Small end free play "F"	0.8–1.0 mm (0.031–0.039 in)	2.0 mm (0.08 in)
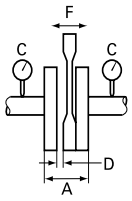		
Clutch:		
Friction plate thickness	2.9–3.1 mm (0.114–0.122 in)	2.8 mm (0.110 in)
Quantity	8	----
Clutch plate thickness	1.5–1.7 mm (0.059–0.067 in)	----
Quantity	7	----
Warp limit	----	0.2 mm (0.008 in)
Clutch spring free length	40.1 mm (1.579 in)	38.1 mm (1.500 in)
Quantity	5	----
Clutch housing thrust clearance	0.15–0.26 mm (0.006–0.010 in)	----
Clutch housing radial clearance	0.014–0.046 mm (0.0006–0.0018 in)	----
Clutch release method	Inner push, cam push	----
Transmission:		
Main axle deflection limit	----	0.01 mm (0.0004 in)
Drive axle deflection limit	----	0.01 mm (0.0004 in)
Shifter:		
Shifting type	Cam drum and guide bar	----
Guide bar bending limit	----	0.05 mm (0.0020 in)
Kick starter type:	Kick and mesh type	----
Kick clip friction force	P=0.8–1.2 kg (1.8–2.6 lb)	----
Air filter oil grade (oiled filter):	Foam-air-filter oil or equivalent oil	----

Item	Standard			Limit
Carburetor:	USA, CDN	EUROPE	AUS, NZ, ZA	
Type/Manufacturer	TMX χ 38SS /MIKUNI	←	←	
I.D. mark	1C35 30	1C36 40	←	----
Main jet (M.J.)	#410	#430	←	----
Jet needle-clip position (J.N.)	6BFY42-74-3	6BFY43-74-3	←	----
Cutaway (C.A.)	4.0	←	←	----
Pilot jet (P.J.)	#40	#45	←	----
Pilot air screw (P.A.S.)	2-1/4	←	←	----
Valve seat size (V.S.)	ø3.8 mm (0.15 in)	←	←	----
Starter jet (G.S.)	#80	←	←	----
Fuel level (F.L.)	9.5–10.5 mm (0.37–0.41 in)	←	←	----
Reed valve:				
Thickness	0.47 mm (0.019 in)			----
Valve stopper height	8.2–8.6 mm (0.323–0.339 in)			----
Valve bending limit	----			0.2 mm (0.008 in)
Cooling:				
Radiator core size:				
Width	107.8 mm (4.24 in)			----
Height (left)	240 mm (9.45 in)			----
Height (right)	220 mm (8.66 in)			----
Thickness	32 mm (1.26 in)			----
Radiator cap opening pressure	95–125 kPa (0.95–1.25 kg/cm^2, 13.5–17.8 psi)			----
Radiator capacity (total)	0.56 L (0.49 Imp qt, 0.59 US qt)			----
Water pump:				
Type	Single-suction centrifugal pump			----

CHASSIS

Item	Standard		Limit
Steering system:			
Steering bearing type	Taper roller bearing		----
Front suspension:	USA, CDN, ZA, AUS, NZ	EUROPE	
Front fork travel	300 mm (11.8 in)	←	----
Fork spring free length	454 mm (17.9 in)	←	449 mm (17.7 in)
Spring rate, STD	K=4.1 N/mm (0.418 kg/mm, 23.4 lb/in)	←	----
Optional spring	Yes	←	----
Oil capacity	524 cm^3 (18.4 Imp oz, 17.7 US oz)	526 cm^3 (18.5 Imp oz, 17.8 US oz)	----
Oil grade	Suspension oil "S1"	←	----
Inner tube outer diameter	48 mm (1.89 in)	←	----
Front fork top end	5 mm (0.2 in)	←	----
Rear suspension:	USA, CDN, ZA, AUS, NZ	EUROPE	
Shock absorber travel	131.5 mm (5.18 in)	←	----
Spring free length	Approx.265 mm (10.43 in)	←	----
Fitting length*			----
I.D. mark (Red/1)	258 mm (10.16 in)	252 mm (9.92 in)	----
I.D. mark (Red/2)	264 mm (10.39 in)	258 mm (10.16 in)	----
I.D. mark (Red/3)	255.5 mm (10.06 in)	249.5 mm (9.82 in)	----
Preload length			
<Min.–Max>	1.5–13 mm (0.06–0.51 in)	←	----
Spring rate, STD	K=46.0 N/mm (4.70 kg/mm, 263.2 lb/in)	←	----
Optional spring	Yes	←	----
Enclosed gas pressure	1,000 kPa (10 kg/cm^2, 142 psi)	←	----
* Spring specification varies according to the difference in the production lot.			
Swingarm:			
Swingarm free play limit			
End	----		1.0 mm (0.04 in)
Side clearance	----		0.2–0.9 mm (0.008–0.035 in)

Item	Standard	Limit
Wheel:		
Front wheel type	Spoke wheel	----
Rear wheel type	Spoke wheel	----
Front rim size/material	21 × 1.60/Aluminum	----
Rear rim size/material	19 × 1.85/Aluminum	----
Rim runout limit:		
Radial	----	2.0 mm (0.08 in)
Lateral	----	2.0 mm (0.08 in)
Drive chain:		
Type/manufacturer	DID520DMA2 SDH G&B/DAIDO	----
Number of links	111 links + joint	----
Chain slack	48–58 mm (1.9–2.3 in)	----
Chain length (15 links)	----	242.9 mm (9.563 in)
Front disc brake:		
Disc outside dia.×Thickness	250 × 3.0 mm (9.84 × 0.12 in)	250 × 2.5 mm (9.84 × 0.10 in)
Pad thickness	4.4 mm (0.17 in)	1.0 mm (0.04 in)
Master cylinder inside dia.	9.52 mm (0.375 in)	----
Caliper cylinder inside dia.	22.65 mm (0.892 in) × 2	----
Brake fluid type	DOT #4	----
Rear disc brake:		
Disc outside dia.×Thickness	245 × 4.0 mm (9.65 × 0.16 in)	245 × 3.5 mm (9.65 × 0.14 in)
Deflection limit	----	0.15 mm (0.006 in)
Pad thickness	6.4 mm (0.25 in)	1.0 mm (0.04 in)
Master cylinder inside dia.	11.0 mm (0.433 in)	----
Caliper cylinder inside dia.	25.4 mm (1.000 in) × 1	----
Brake fluid type	DOT #4	----
Brake lever and brake pedal:		
Brake lever position	95 mm (3.74 in)	----
Brake pedal height (vertical height above footrest top)	Zero mm (Zero in)	----
Clutch lever free play (lever end)	8–13 mm (0.31–0.51 in)	----
Throttle grip free play	3–5 mm (0.12–0.20 in)	----

ELECTRICAL

Item	Standard	Limit
Ignition system:		
Ignition timing (B.T.D.C.)	0.48 mm (0.019 in)	----
Advancer type	Electrical	----
CDI:		
Magneto-model (stator)/Manufacturer	1C3-10/YAMAHA	----
Charging coil 1 resistance (color)	720–1,080 Ω at 20 °C (68 °F) (Green/White-Black/Red)	----
Charging coil 2 resistance (color)	44–66 Ω at 20 °C (68 °F) (Black-Green/Blue)	----
Pickup coil resistance (color)	248–372 Ω at 20 °C (68 °F) (White/Blue-White/Red)	----
CDI unit-model/manufacturer	1C3-10/YAMAHA	----
Ignition coil:		
Model/manufacturer	1C3-00/YAMAHA	----
Minimum spark gap	6 mm (0.24 in)	----
Primary winding resistance	0.24–0.36 Ω at 20 °C (68 °F)	----
Secondary winding resistance	5.7–8.5 kΩ at 20 °C (68 °F)	----
Spark plug cap:		
Resistance	4–6 kΩ at 20 °C (68 °F)	----

TIGHTENING TORQUES

ENGINE

TIP

△ - marked portion shall be checked for torque tightening after break-in or before each race.

	Part to be tightened	Thread size	Q'ty	Tightening torque		
				Nm	m•kg	ft•lb
	Spark plug	M14S × 1.25	1	20	2.0	14
	Cylinder head (nut)	M8 × 1.25	5	28	2.8	20
	Cylinder head (stud)	M8 × 1.25	5	13	1.3	9.4
	Cylinder (nut)	M8 × 1.25	4	30	3.0	22
	Cylinder (stud)	M10 × 1.25	4	13	1.3	9.4
	Power valve:					
	Cover	M5 × 0.8	4	5	0.5	3.6
	Link lever	M4 × 0.7	1	4	0.4	2.9
	Holder (power valve)	M5 × 0.8	4	8	0.8	5.8
	Push rod	M5 × 0.8	1	5	0.5	3.6
	Thrust plate	M5 × 0.8	1	4	0.4	2.9
	Governor fork	M4 × 0.7	2	5	0.5	3.6
	Housing	M5 × 0.8	3	4	0.4	2.9
	Water pump housing cover	M6 × 1.0	4	10	1.0	7.2
	Coolant drain bolt	M6 × 1.0	1	10	1.0	7.2
	Radiator	M6 × 1.0	6	10	1.0	7.2
	Radiator panel	M6 × 1.0	2	10	1.0	7.2
	Radiator hose clamp	M6 × 1.0	8	2	0.2	1.4
	Air filter element	M6 × 1.0	1	2	0.2	1.4
	Carburetor joint	M6 × 1.0	4	10	1.0	7.2
	Carburetor joint clamp	M4 × 0.7	1	2	0.2	1.4
	Air filter joint clamp	M4 × 0.7	1	2	0.2	1.4
△	Air filter case	M6 × 1.0	4	8	0.8	5.8
	Air filter guide clamp	M5 × 0.8	1	4	0.4	2.9
	Reed valve	M3 × 0.5	6	1	0.1	0.7
	Throttle cable adjust bolt and locknut	M8 × 1.25	1	7	0.7	5.1
	Throttle cable	M6 × 0.75	1	4	0.4	2.9
	Crankcase	M6 × 1.0	12	14	1.4	10
	Right crankcase cover	M6 × 1.0	8	10	1.0	7.2
	Left crankcase cover	M6 × 1.0	4	5	0.5	3.6
	Drive chain sprocket cover	M6 × 1.0	2	5	0.5	3.6
	Bearing plate cover	M6 × 1.0	4	10	1.0	7.2
	Holder	M6 × 1.0	1	10	1.0	7.2
	Oil check bolt	M6 × 1.0	1	10	1.0	7.2

	Part to be tightened	Thread size	Q'ty	Tightening torque		
				Nm	m•kg	ft•lb
	Oil drain bolt	M10 × 1.25	1	20	2.0	14
	Kickstarter crank	M6 × 1.0	1	10	1.0	7.2
	Clutch cover	M6 × 1.0	6	10	1.0	7.2
	Primary drive gear	M8 × 1.25	1	48	4.8	35
	Clutch boss	M16 × 1.0	1	80	8.0	58
	Clutch spring	M6 × 1.0	5	10	1.0	7.2
	Clutch cable adjust bolt and locknut	M6 × 0.75	1	4	0.4	2.9
	Drive sprocket	M18 × 1.0	1	75	7.5	54
	Shift pedal	M6 × 1.0	1	12	1.2	8.7
	Bearing plate cover (shift cam)	M6 × 1.0	2	10	1.0	7.2
	Shift guide	M6 × 1.0	2	10	1.0	7.2
	Stopper lever	M6 × 1.0	1	10	1.0	7.2
	Segment	M8 × 1.25	1	30	3.0	22
△	Exhaust pipe	M6 × 1.0	2	12	1.2	8.7
△	Exhaust pipe stay (front)	M6 × 1.0	1	12	1.2	8.7
△	Exhaust pipe stay (rear)	M6 × 1.0	1	12	1.2	8.7
	Silencer:					
△	Silencer and frame	M6 × 1.0	2	12	1.2	8.7
	Fiber (For USA and CDN)	M6 × 1.0	2	10	1.0	7.2
	Fiber (Except for USA and CDN)	M6 × 1.0	4	10	1.0	7.2

CHASSIS

TIP

△ - marked portion shall be checked for torque tightening after break-in or before each race.

	Part to be tightened	Thread size	Q'ty	Tightening torque		
				Nm	m•kg	ft•lb
△	Upper bracket and outer tube	M8 × 1.25	4	21	2.1	15
△	Lower bracket and outer tube	M8 × 1.25	4	21	2.1	15
△	Upper bracket and steering stem	M24 × 1.0	1	145	14.5	105
△	Handlebar upper holder	M8 × 1.25	4	28	2.8	20
△	Handlebar lower holder	M12 × 1.25	2	40	4.0	29
△	Steering ring nut	M28 × 1.0	1	Refer to TIP.		
	Front fork and damper assembly	M51 × 1.5	2	30	3.0	22
	Front fork and adjuster	M22 × 1.25	2	55	5.5	40
	Damper assembly and base valve	M42 × 1.5	2	29	2.9	21
	Adjuster and damper assembly	M12 × 1.25	2	29	2.9	21
	Bleed screw (front fork) and base valve	M5 × 0.8	2	1	0.1	0.7
△	Front fork and front fork protector	M6 × 1.0	6	5	0.5	3.6
△	Cable guide (front brake hose) and lower bracket	M6 × 1.0	1	4	0.4	2.9

	Part to be tightened	Thread size	Q'ty	Tightening torque		
				Nm	m•kg	ft•lb
△	Front fork protector and brake hose holder	M6 × 1.0	2	8	0.8	5.8
	Throttle cable cap	M4 × 0.7	2	1	0.1	0.7
△	Front brake master cylinder and bracket	M6 × 1.0	2	9	0.9	6.5
	Brake lever mounting bolt	M6 × 1.0	1	6	0.6	4.3
	Brake lever mounting nut	M6 × 1.0	1	6	0.6	4.3
	Brake lever position locknut	M6 × 1.0	1	5	0.5	3.6
	Clutch lever mounting nut	M6 × 1.0	1	4	0.4	2.9
	Clutch lever holder	M5 × 0.8	2	4	0.4	2.9
	Front brake master cylinder cap	M4 × 0.7	2	2	0.2	1.4
△	Front brake hose union bolt (brake master cylinder)	M10 × 1.25	1	30	3.0	22
△	Front brake hose union bolt (caliper)	M10 × 1.25	1	30	3.0	22
△	Front brake caliper and front fork	M8 × 1.25	2	28	2.8	20
	Grip cap upper and lower	M6 × 1.0	2	4	0.4	2.9
	Brake caliper (front and rear) and pad pin plug	M10 × 1.0	2	3	0.3	2.2
△	Brake caliper (front and rear) and pad pin	M10 × 1.0	2	18	1.8	13
△	Brake caliper (front and rear) and bleed screw	M8 × 1.25	2	6	0.6	4.3
△	Front wheel axle and axle nut	M16 × 1.5	1	105	10.5	75
△	Front wheel axle holder	M8 × 1.25	4	21	2.1	15
△	Front brake disc and wheel hub	M6 × 1.0	6	12	1.2	8.7
△	Rear brake disc and wheel hub	M6 × 1.0	6	14	1.4	10
	Footrest bracket and frame	M10 × 1.25	4	55	5.5	40
△	Brake pedal mounting	M8 × 1.25	1	26	2.6	19
△	Rear brake master cylinder and frame	M6 × 1.0	2	10	1.0	7.2
	Rear brake master cylinder cap	M4 × 0.7	2	2	0.2	1.4
△	Rear brake hose union bolt (caliper)	M10 × 1.25	1	30	3.0	22
△	Rear brake hose union bolt (master cylinder)	M10 × 1.25	1	30	3.0	22
△	Rear wheel axle and axle nut	M20 × 1.5	1	125	12.5	90
△	Nipple (spoke)	—	72	3	0.3	2.2
△	Driven sprocket and wheel hub	M8 × 1.25	6	42	4.2	30
△	Disc cover and rear brake caliper	M6 × 1.0	2	10	1.0	7.2
△	Protector and rear brake caliper	M6 × 1.0	2	7	0.7	5.1
	Drive chain puller adjust bolt and locknut	M8 × 1.25	2	19	1.9	13
	Engine :					
△	Engine and frame (front)	M10 × 1.25	1	64	6.4	46
△	Engine and frame (lower)	M10 × 1.25	1	64	6.4	46
△	Engine bracket and frame	M8 × 1.25	2	34	3.4	24
△	Engine bracket and engine	M8 × 1.25	1	34	3.4	24
△	Pivot shaft and nut	M16 × 1.5	1	85	8.5	61

	Part to be tightened	Thread size	Q'ty	Tightening torque		
				Nm	m•kg	ft•lb
△	Relay arm and swingarm	M14 × 1.5	1	70	7.0	50
△	Relay arm and connecting rod	M14 × 1.5	1	80	8.0	58
△	Connecting rod and frame	M14 × 1.5	1	80	8.0	58
△	Rear shock absorber and frame	M10 × 1.25	1	56	5.6	40
△	Rear shock absorber and relay arm	M10 × 1.25	1	53	5.3	38
△	Rear frame and frame (upper)	M8 × 1.25	1	32	3.2	23
△	Rear frame and frame (lower)	M8 × 1.25	2	29	2.9	21
△	Swingarm and brake hose holder	M5 × 0.8	4	3	0.3	2.2
	Swingarm and patch	M4 × 0.7	4	2	0.2	1.4
	Drive chain tensioner	M8 × 1.25	2	16	1.6	11
	Drive chain support and swingarm	M6 × 1.0	3	7	0.7	5.1
	Seal guard and swingarm	M5 × 0.8	4	6	0.6	4.3
	Cable guide and frame	M5 × 0.8	2	4	0.4	2.9
△	Fuel tank boss and frame	M10 × 1.25	2	20	2.0	14
△	Fuel tank	M6 × 1.0	2	10	1.0	7.2
△	Fuel tank and fuel cock	M6 × 1.0	2	4	0.4	2.9
	Fuel tank and seat set bracket	M6 × 1.0	1	7	0.7	5.1
	Fuel tank and hooking screw (fitting band)	M6 × 1.0	1	7	0.7	5.1
	Fuel tank and fuel tank bracket	M6 × 1.0	4	7	0.7	5.1
△	Air scoop and fuel tank	M6 × 1.0	4	7	0.7	5.1
△	Air scoop and radiator guard (lower)	M6 × 1.0	2	6	0.6	4.3
△	Front fender	M6 × 1.0	4	7	0.7	5.1
△	Rear fender (front)	M6 × 1.0	2	7	0.7	5.1
△	Rear fender (rear)	M6 × 1.0	2	12	1.2	8.7
△	Side cover	M6 × 1.0	2	7	0.7	5.1
	Seat	M8 × 1.25	2	19	1.9	13
△	Number plate	M6 × 1.0	1	7	0.7	5.1

TIP

1. First, tighten the steering ring nut approximately 38 Nm (3.8 m•kg, 27 ft•lb) by using the steering nut wrench, then loosen the steering ring nut one turn.
2. Retighten the steering ring nut 7 Nm (0.7 m•kg, 5.1 ft•lb).

ELECTRICAL

Part to be tightened	Thread size	Q'ty	Tightening torque		
			Nm	m•kg	ft•lb
Stator	M6 × 1.0	3	7	0.7	5.1
Rotor	M12 × 1.25	1	56	5.6	40
Ignition coil	M6 × 1.0	2	7	0.7	5.1

GENERAL TORQUE SPECIFICATIONS

This chart specifies torque for standard fasteners with standard I.S.O. pitch threads. Torque specifications for special components or assemblies are included in the applicable sections of this book. To avoid warpage, tighten multi-fastener assemblies in a crisscross fashion, in progressive stages, until full torque is reached. Unless otherwise specified, torque specifications call for clean, dry threads. Components should be at room temperature.

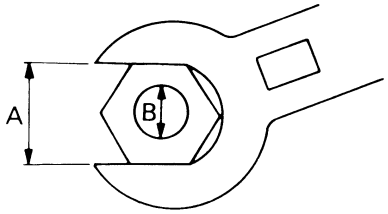

A. Distance between flats
B. Outside thread diameter

A (Nut)	B (Bolt)	TORQUE SPECIFICATION		
		Nm	m•kg	ft•lb
10 mm	6 mm	6	0.6	4.3
12 mm	8 mm	15	1.5	11
14 mm	10 mm	30	3.0	22
17 mm	12 mm	55	5.5	40
19 mm	14 mm	85	8.5	61
22 mm	16 mm	130	13	94

DEFINITION OF UNITS

Unit	Read	Definition	Measure
mm	millimeter	10^{-3} meter	Length
cm	centimeter	10^{-2} meter	Length
kg	kilogram	10^{3} gram	Weight
N	Newton	1 kg × m/sec^2	Force
Nm	Newton meter	N × m	Torque
m•kg	Meter kilogram	m × kg	Torque
Pa	Pascal	N/m^2	Pressure
N/mm	Newton per millimeter	N/mm	Spring rate
L	Liter	—	Volume or capacity
cm^3	Cubic centimeter	—	Volume or capacity
r/min	Revolution per minute	—	Engine speed

MEMO

CABLE ROUTING DIAGRAM

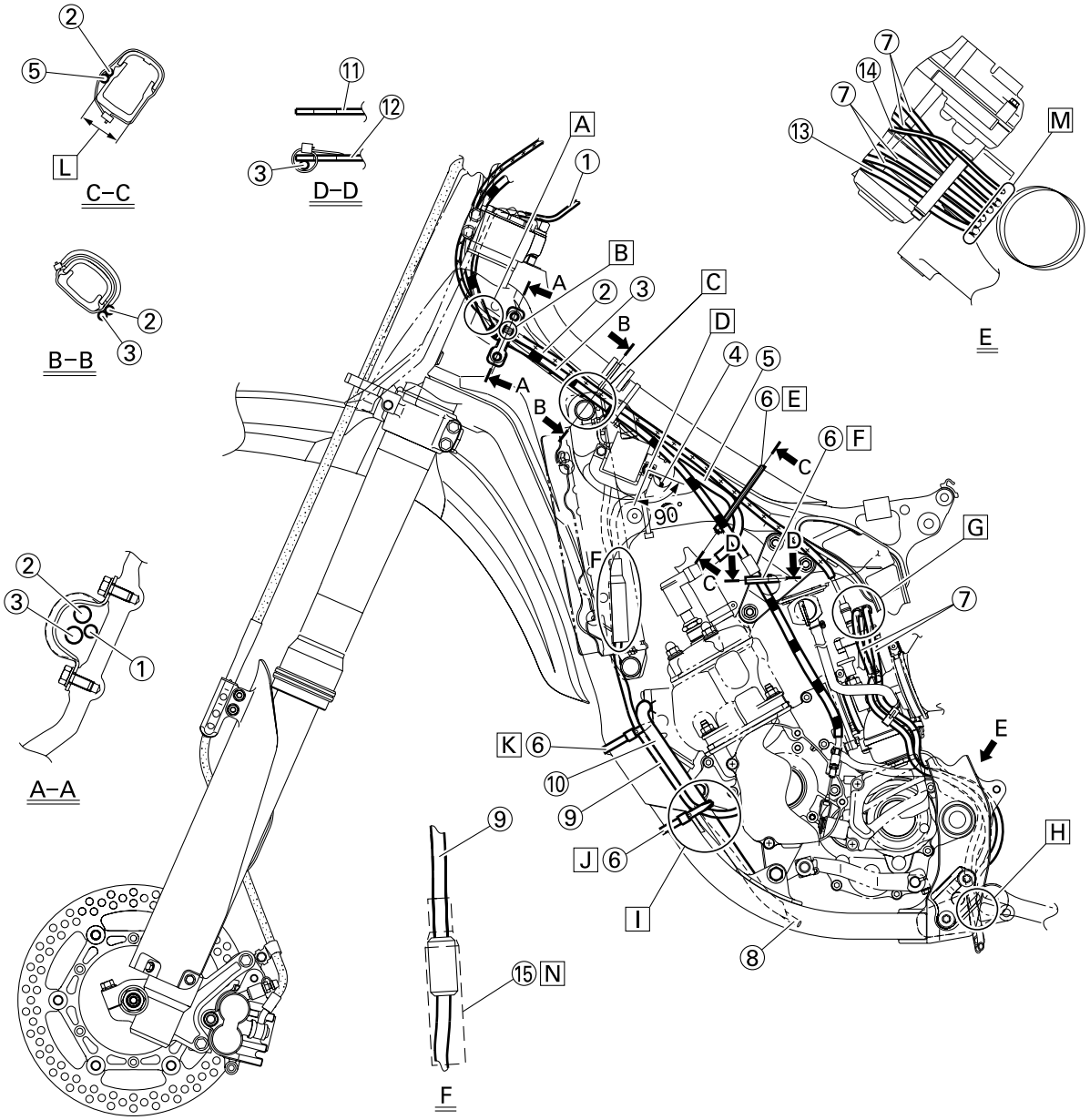

1. "ENGINE STOP" button lead
2. Throttle cable
3. Clutch cable
4. Ground lead
5. High tension cord
6. Clamp
7. Air vent hose
8. Radiator breather hose
9. CDI magneto lead
10. YPVS breather hose
11. Engine bracket (right)
12. Engine bracket (left)
13. Crankcase breather hose
14. Overflow hose
15. Connector cover

A. Pass the clutch cable on the outside of the throttle cable and "ENGINE STOP" button lead.
B. Align the throttle cable locating tape with the cable guide.
C. Pass the throttle cable, clutch cable and "ENGINE STOP" button lead above the radiator hose.
D. Install the ignition coil, side core and ground lead together to the frame. Take care to fasten the ground lead so that its terminal is within the indicated range.
E. Clamp the throttle cable and high tension cord to the frame.
F. Clamp the clutch cable to the left engine bracket. Clamp the clutch cable below the positioning grommet.
G. Pass the air vent hose back of the throttle cable.
H. Pass the air vent hose, overflow hose and crankcase breather hose between the frame and connecting rod.
I. Pass the radiator breather hose and YPVS breather hose outside the engine bracket and inside the down tube. Then pass the radiator breather hose inside the YPVS breather hose.
J. Clamp the CDI magneto lead, radiator breather hose and YPVS breather hose to the frame.
K. Clamp to the frame the CDI magneto lead and radiator breather hose. Take care to clamp them above the projection on the frame.
L. Locate the clamp ends in the arrowed range.
M. Pass the air vent hose, overflow hose and crankcase breather hose so that they do not contact the rear shock absorber.
N. Bring the connector cover into contact with the coupler.

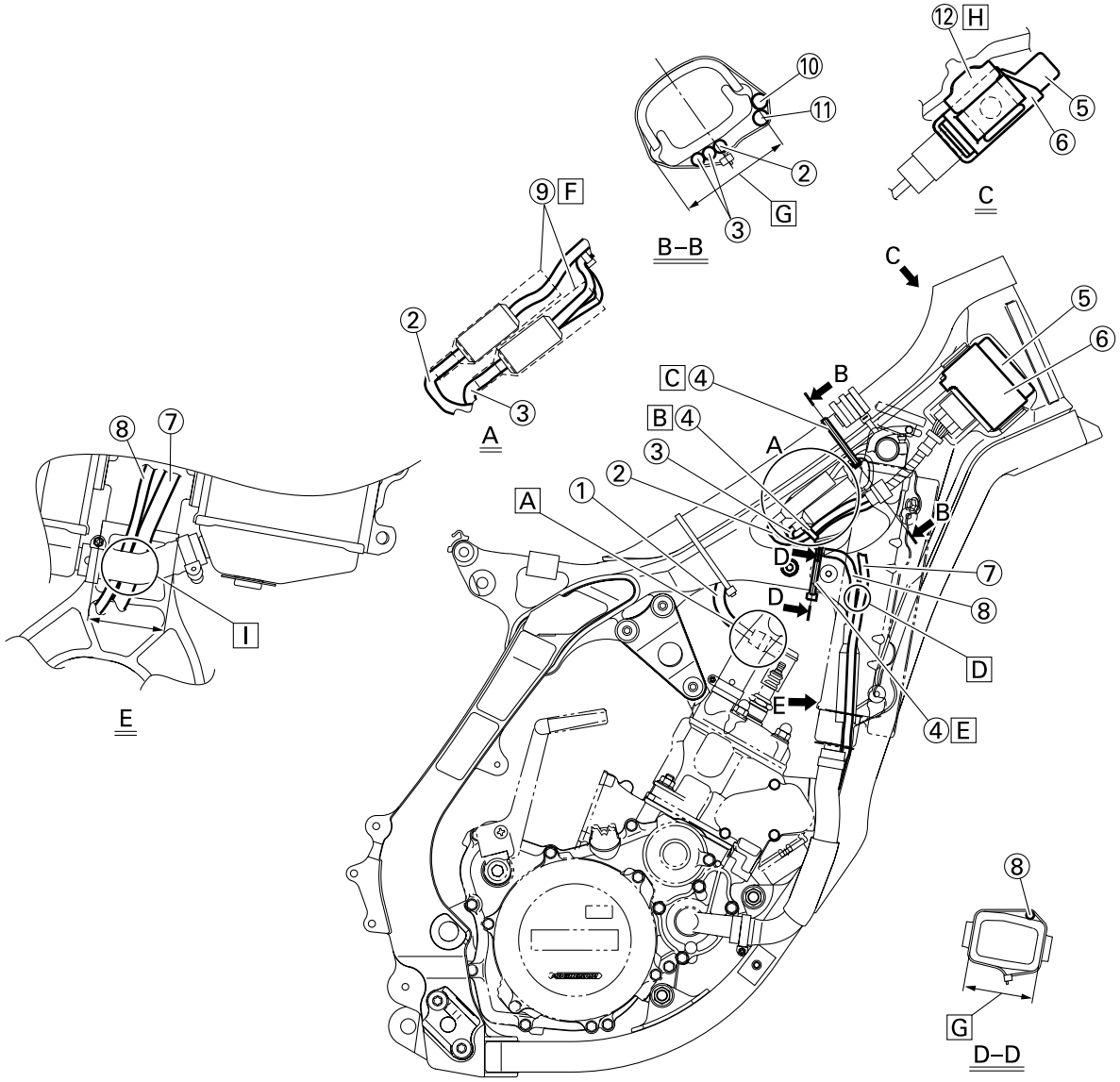
⑫ H
⑩
⑪
⑤
⑥
②
G
③
C
B–B
⑨ F
②
③
A
C
⑤
⑥
C ④
B
B ④
A
③
②
①
A
B
D
⑦
D
⑧
D
E
④ E
⑧
⑦
I
E
⑧
G
D–D

1. High tension cord
2. "ENGINE STOP" button lead
3. Ignition coil lead
4. Clamp
5. CDI unit
6. CDI unit band
7. Radiator breather hose
8. CDI magneto lead
9. Connector cover
10. Throttle cable
11. Clutch cable
12. CDI unit stay

A. Pass the high tension cord to the left of the radiator hose.
B. Using a plastic locking tie, clamp the "ENGINE STOP" button lead, ignition coil lead and CDI magneto lead together with the clamp ends backward and then cut off the tie end.
C. Clamp to the frame the throttle cable, clutch cable, ignition coil lead and "ENGINE STOP" button lead. In so doing, clamp the ignition coil lead and "ENGINE STOP" button lead at their protecting tubes. Tighten the clamp so that the "ENGINE STOP" button lead is not pulled when the handlebar is turned to the right and left.
D. Pass the CDI magneto lead and radiator breather hose between the frame and the radiator(right).
E. Clamp the CDI magneto lead to the frame at its locating tape.
F. Bring the connector cover into contact with the coupler.
G. Locate the clamp ends in the arrowed range.
H. Insert the CDI unit band until it stops at the CDI unit stay.
I. Pass the CDI magneto lead and radiator breather hose between the frame and the radiator hose so that they come within the arrow-indicated range. Also take care so that the CDI magneto lead passes on the left of the radiator breather hose.

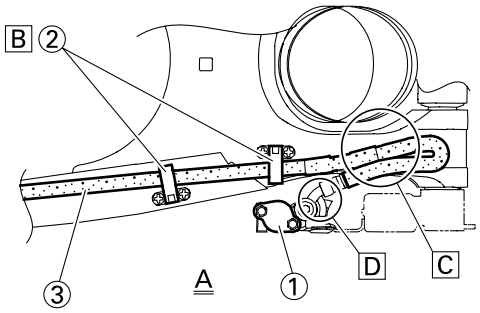
B
2
3
A
1
D
C

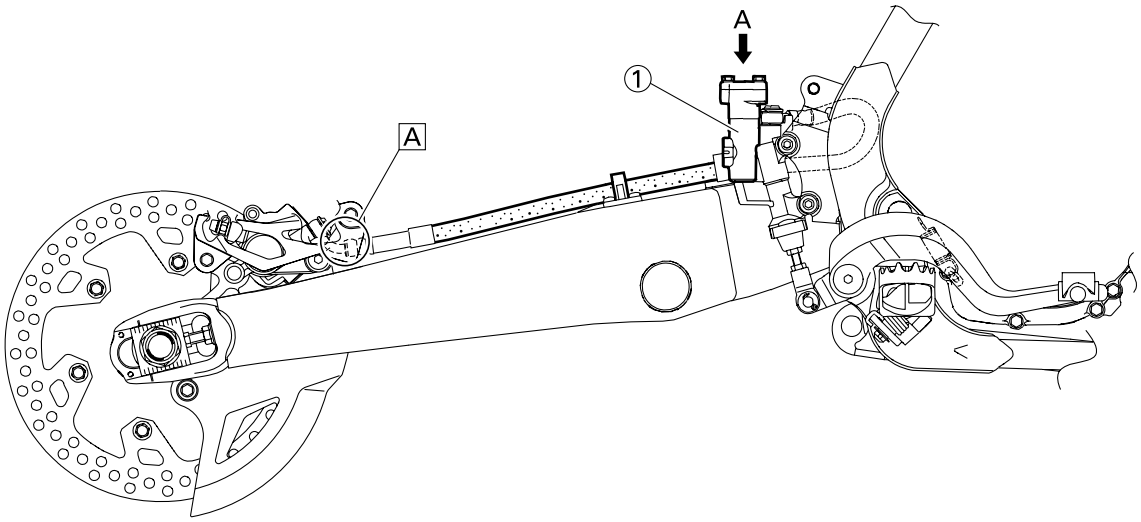
A
1
A

1. Master cylinder
2. Brake hose holder
3. Brake hose

A. Install the brake hose so that its pipe portion directs as shown and lightly touches the projection on the caliper.
B. Pass the brake hose into the brake hose holders.
C. If the brake hose contacts the spring (rear shock absorber), correct its twist.
D. Install the brake hose so that its pipe portion directs as shown and lightly touches the projection on the master cylinder.

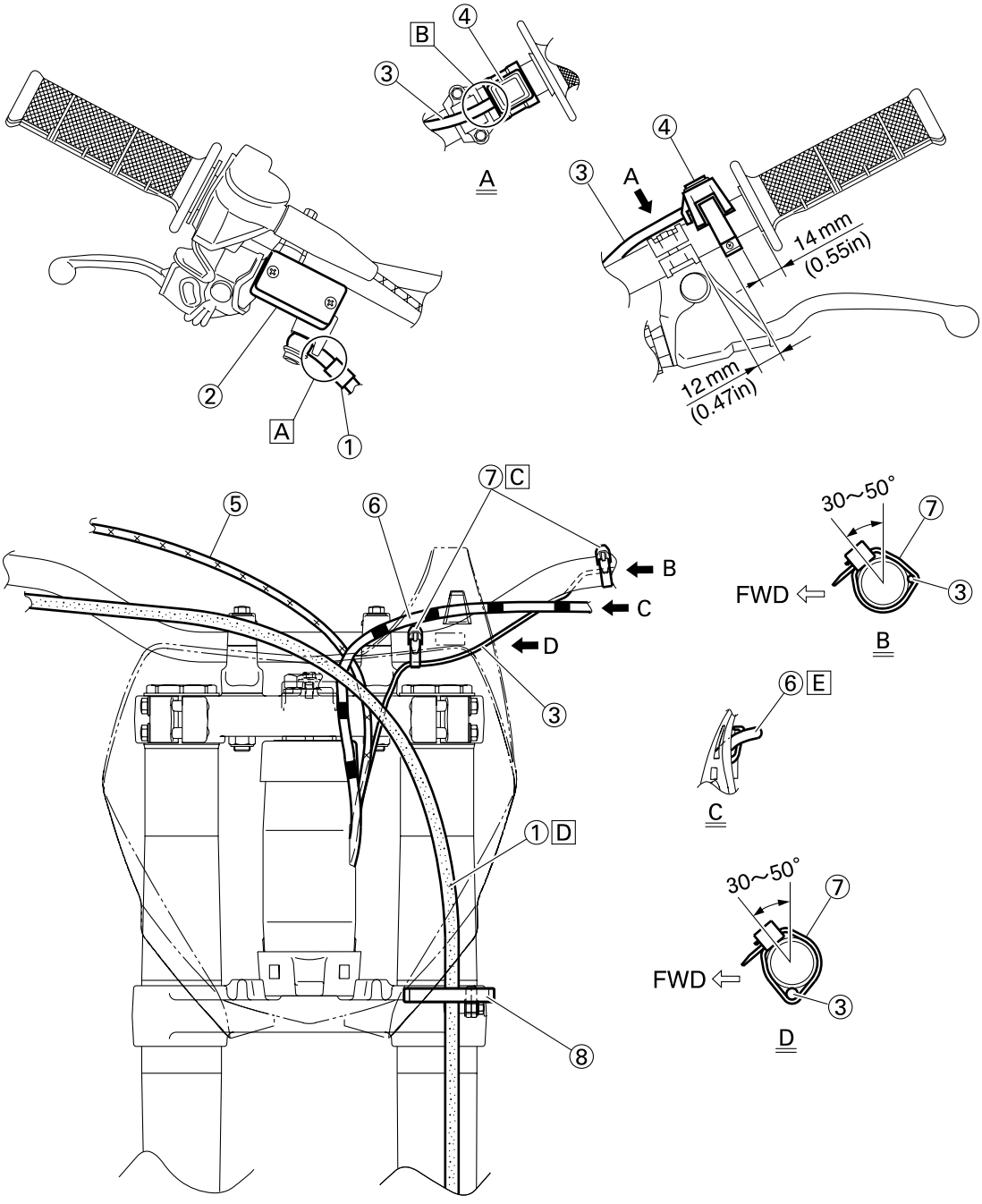
B
④
③
A
A
④
③
A
14 mm
(0.55in)
12 mm
(0.47in)
②
A
①
⑦ C
⑤
⑥
B
C
D
③
① D
⑧
30~50°
⑦
FWD
③
B
⑥ E
C
30~50°
⑦
FWD
③
D

1. Brake hose
2. Master cylinder
3. "ENGINE STOP" button lead
4. "ENGINE STOP" button
5. Throttle cable
6. Clutch cable
7. Clamp
8. Cable guide

A. Install the brake hose so that its pipe portion directs as shown and lightly touches the projection on the master cylinder.
B. Pass the "ENGINE STOP" button lead in the middle of the clutch holder.
C. Clamp the "ENGINE STOP" button lead to the handlebar.
D. Pass the brake hose in front of the number plate and through the cable guide.
E. Pass the clutch cable through the cable guide on the number plate.

REGULAR INSPECTION AND ADJUSTMENTS

MAINTENANCE INTERVALS

The following schedule is intended as a general guide to maintenance and lubrication. Bear in mind that such factors as weather, terrain, geographical location, and individual usage will alter the required maintenance and lubrication intervals. If you are a doubt as to what intervals to follow in maintaining and lubricating your machine, consult your Yamaha dealer.

Item	After break-in	Every race	Every third	Every fifth	As required	Remarks
PISTON						
Inspect and clean	●	●				Inspect crack.
Replace				●	●	Inspect carbon deposits and eliminate them.
PISTON RING						
Inspect	●	●				Check ring end gap.
Replace			●		●	
PISTON PIN, SMALL END BEARING						
Inspect		●				
Replace					●	
CYLINDER HEAD						Inspect carbon deposits and eliminate them.
Inspect and clean	●	●				Check gasket.
Retighten	●	●				
CYLINDER						
Inspect and clean	●	●				Inspect score marks.
Replace					●	Inspect wear.
YPVS						
Inspect and clean	●	●				Inspect carbon deposits and eliminate them.
CLUTCH						
Inspect and adjust	●	●				Inspect housing, friction plate, clutch plate and spring.
Replace					●	
TRANSMISSION						
Replace oil	●			●		Yamalube 4 (10W-40) or SAE 10W-40 SE motor oil
Inspect					●	
Replace bearing					●	
SHIFT FORK, SHIFT CAM, GUIDE BAR						
Inspect					●	Inspect wear

Item	After break-in	Every race	Every third	Every fifth	As required	Remarks
ROTOR NUT						
Retighten	●			●		
MUFFLER						
Inspect	●	●				
Clean				●		
Retighten	●	●				
CRANK						
Inspect and clean				●	●	
CARBURETOR						
Inspect, adjust and clean	●	●				
SPARK PLUG						
Inspect and clean	●		●			
Replace					●	
DRIVE CHAIN						Use chain lube.
Lubricate, slack, alignment	●	●				Chain slack: 48–58 mm (1.9–2.3 in)
Replace					●	
COOLING SYSTEM						
Check coolant level and leakage	●	●				
Check radiator cap operation					●	
Replace coolant					●	Every two years
Inspect hoses		●				
OUTSIDE NUTS AND BOLTS						
Retighten	●	●				Refer to "STARTING AND BREAK-IN" section in the CHAPTER 1.
AIR FILTER						
Clean and lubricate	●	●				Use foam air-filter oil or equivalent oil.
Replace					●	
FRAME						
Clean and inspect	●	●				
FUEL TANK, COCK						
Clean and inspect	●		●			

Item	After break-in	Every race	Every third	Every fifth	As required	Remarks
BRAKES						
Adjust lever position and pedal height	●	●				
Lubricate pivot point	●	●				
Check brake disc surface	●	●				
Check fluid level and leakage	●	●				
Retighten brake disc bolts, caliper bolts, master cylinder bolts and union bolts	●	●				
Replace pads					●	
Replace brake fluid					●	Every one year
FRONT FORKS						
Inspect and adjust	●	●				
Replace oil	●			●		Suspension oil "S1"
Replace oil seal					●	
FRONT FORK OIL SEAL AND DUST SEAL						
Clean and lube	●	●				Lithium base grease
PROTECTOR GUIDE						
Replace					●	
REAR SHOCK ABSORBER						
Inspect and adjust	●	●				
					(After rain ride)	
Lube			●		●	Molybdenum disulfide grease
Replace spring seat					●	Every one year
Retighten	●	●				
DRIVE CHAIN GUIDE AND ROLLERS						
Inspect	●	●				
SWINGARM						
Inspect, lube and retighten	●	●				Molybdenum disulfide grease
RELAY ARM, CONNECTING ROD						
Inspect, lube and retighten	●	●				Molybdenum disulfide grease

Item	After break-in	Every race	Every third	Every fifth	As required	Remarks
STEERING HEAD						
Inspect free play and retighten	●	●				
Clean and lube				●		Lithium base grease
Replace bearing					●	
TIRE, WHEELS						
Inspect air pressure, wheel run-out, tire wear and spoke looseness	●	●				
Retighten sprocket bolt	●	●				
Inspect bearings			●			
Replace bearings					●	
Lubricate			●			Lithium base grease
THROTTLE, CONTROL CABLE						
Check routing and connection	●	●				
Lubricate	●	●				Yamaha cable lube or SAE 10W-40 motor oil

PRE-OPERATION INSPECTION AND MAINTENANCE

Before riding for break-in operation, practice or a race, make sure the machine is in good operating condition.
Before using this machine, check the following points.

GENERAL INSPECTION AND MAINTENANCE

Item	Routine	Page
Coolant	Check that coolant is filled up to the radiator cap. Check the cooling system for leakage.	P.3-6 – 8
Fuel	Check that a fresh mixture of oil and gasoline is filled in the fuel tank. Check the fuel line for leakage.	P.1-13
Transmission oil	Check that the oil level is correct. Check the crankcase for leakage.	P.3-11 – 12
Gear shifter and clutch	Check that gears can be shifted correctly in order and that the clutch operates smoothly.	P.3-8 – 9
Throttle grip/Housing	Check that the throttle grip operation and free play are correctly adjusted. Lubricate the throttle grip and housing, if necessary.	P.3-9
Brakes	Check the play of front brake and effect of front and rear brake.	P.3-13 – 18
Drive chain	Check drive chain slack and alignment. Check that the drive chain is lubricated properly.	P.3-18 – 20
Wheels	Check for excessive wear and tire pressure. Check for loose spokes and have no excessive play.	P.3-24 – 25
Steering	Check that the handlebar can be turned smoothly and have no excessive play.	P.3-25 – 27
Front forks and rear shock absorber	Check that they operate smoothly and there is no oil leakage.	P.3-20 – 24
Cables (wires)	Check that the clutch and throttle cables move smoothly. Check that they are not caught when the handlebars are turned or when the front forks travel up and down.	—
Muffler	Check that the muffler is tightly mounted and has no cracks.	P.4-4 – 5
Rear wheel sprocket	Check that the rear wheel sprocket tightening bolt is not loose.	P.3-18
Lubrication	Check for smooth operation. Lubricate if necessary.	P.3-28
Bolts and nuts	Check the chassis and engine for loose bolts and nuts.	P.1-15
Lead connectors	Check that the CDI magneto, CDI unit, and ignition coil are connected tightly.	P.1-7
Settings	Is the machine set suitably for the condition of the racing course and weather or by taking into account the results of test runs before racing? Are inspection and maintenance completely done?	P.7-1 – 16

ENGINE

CHECKING THE COOLANT LEVEL

⚠ WARNING

Do not remove the radiator cap "1", drain bolt and hoses when the engine and radiator are hot. Scalding hot fluid and steam may be blown out under pressure, which could cause serious injury. When the engine has cooled, place a thick towel over the radiator cap, slowly rotate the cap counterclockwise to the detent. This procedure allows any residual pressure to escape. When the hissing sound has stopped, press down on the cap while turning counterclockwise and remove it.

NOTICE

Hard water or salt water is harmful to the engine parts. You may use distilled water, if you can't get soft water.

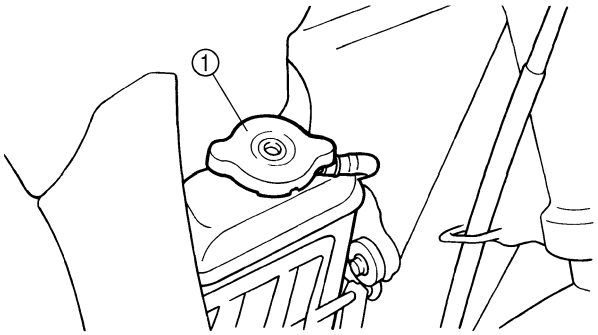

1. Place the machine on a level place, and hold it in an upright position.
2. Remove:
   - Radiator cap
3. Check:
   - Coolant level "a"
     Coolant level low → Add coolant.

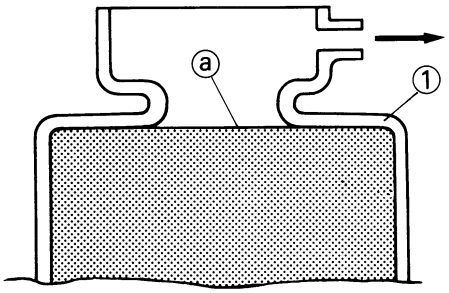

1. Radiator

CHANGING THE COOLANT

⚠ WARNING

Do not remove the radiator cap when the engine is hot.

NOTICE

Take care so that coolant does not splash on painted surfaces. If it splashes, wash it away with water.

1. Place a container under the engine.
2. Remove:
   - Coolant drain bolt "1"

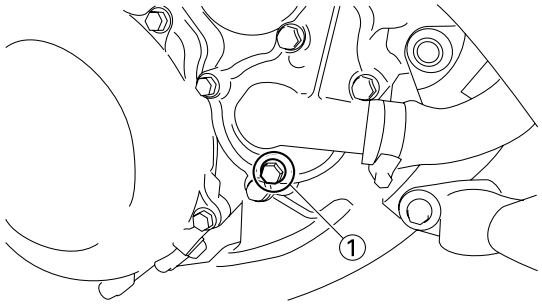

3. Remove:
   - Radiator cap
     Drain the coolant completely.
4. Clean:
   - Cooling system
     Thoroughly flush the cooling system with clean tap water.
5. Install:
   - Copper washer New
   - Coolant drain bolt

	Coolant drain bolt: **10 Nm (1.0 m•kg, 7.2 ft•lb)**

6. Fill:
   - Radiator
   - Engine
     To specified level.

	Recommended coolant: **High quality ethylene glycol antifreeze containing anti-corrosion for aluminum engine** **Coolant "1" and water (soft water) "2" mixing ratio:** **50%/50%** **Coolant capacity:** **0.9 L (0.79 Imp qt, 0.95 US qt)**

NOTICE

- **Do not mix more than one type of ethylene glycol antifreeze containing corrosion inhibitors for aluminum engine.**
- **Do not use water containing impurities or oil.**

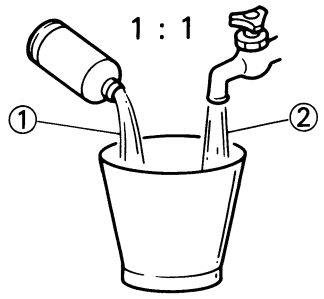

▼▼▼▼▼▼▼▼▼▼▼▼▼▼▼▼▼▼▼▼▼▼▼▼▼▼▼▼▼▼▼▼

Handling notes of coolant:
The coolant is harmful so it should be handled with special care.

⚠ WARNING

- **When coolant splashes to your eye. Thoroughly wash your eye with water and see your doctor.**
- **When coolant splashes to your clothes. Quickly wash it away with water and then with soap.**
- **When coolant is swallowed. Quickly make him vomit and take him to a doctor.**

▲▲▲▲▲▲▲▲▲▲▲▲▲▲▲▲▲▲▲▲▲▲▲▲▲▲▲▲▲▲▲▲

7. Install:
   - Radiator cap
     Start the engine and warm it up for a several minutes.
8. Check:
   - Coolant level
     Coolant level low → Add coolant.

CHECKING THE RADIATOR CAP

1. Inspect:
   - Seal (radiator cap) "1"
   - Valve and valve seat "2"
     Crack/damage → Replace.
     Exist fur deposits "3" → Clean or replace.

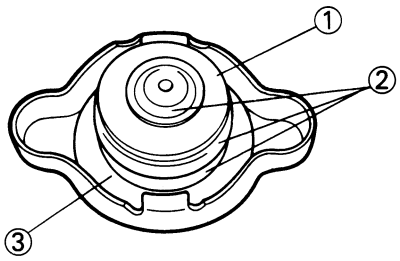

CHECKING THE RADIATOR CAP OPENING PRESSURE

1. Attach:
   - Radiator cap tester "1" and adapter "2"

	Radiator cap tester: YU-24460-01/90890-01325 **Radiator cap tester adapter: YU-33984/90890-01352**

TIP
Apply water on the radiator cap seal.

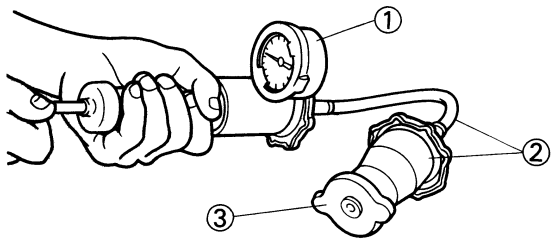

   3. Radiator cap
2. Apply the specified pressure.

	Radiator cap opening pressure: 95–125 kPa (0.95–1.25 kg/cm^2, 13.5–17.8 psi)

3. Inspect:
   - Pressure
     Impossible to maintain the specified pressure for 10 seconds → Replace.

CHECKING THE COOLING SYSTEM

1. Inspect:
   - Coolant level
2. Attach:
   - Radiator cap tester "1" and adapter "2"

	Radiator cap tester: YU-24460-01/90890-01325 **Radiator cap tester adapter: YU-33984/90890-01352**

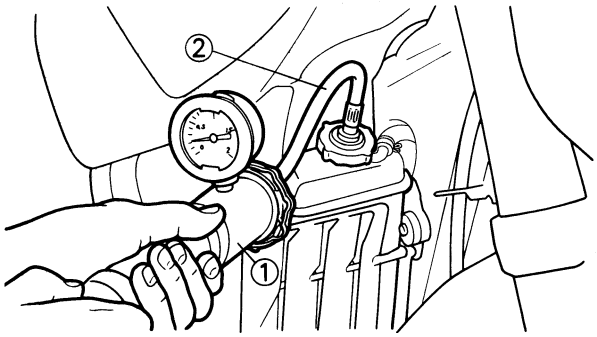

3. Apply the specified pressure.

	Standard pressure: **180 kPa (1.8 kg/cm^2, 25.6 psi)**

TIP
- Do not apply pressure more than specified pressure.
- Radiator should be filled fully.

4. Inspect:
   - Pressure
     Impossible to maintain the specified pressure for 10 seconds → Repair.
   - Radiator "1"
   - Radiator hose joint "2"
     Coolant leakage → Repair or replace.
   - Radiator hose "3"
     Swelling → Replace.

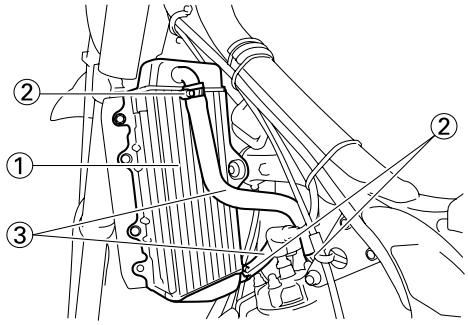

ADJUSTING THE CLUTCH CABLE FREE PLAY

1. Check:
   - Clutch lever free play "a"
     Out of specification → Adjust.

	Clutch lever free play "a" : **8–13 mm (0.31–0.51 in)**

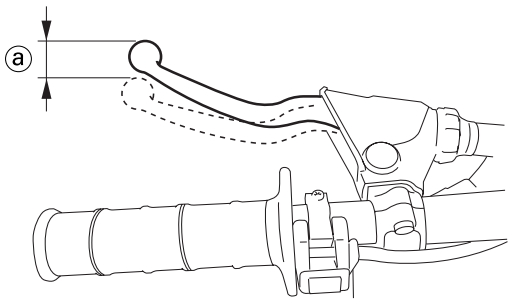

2. Adjust:
   - Clutch lever free play

▼▼▼▼▼▼▼▼▼▼▼▼▼▼▼▼▼▼▼▼▼▼▼▼▼▼▼▼▼▼▼▼

Clutch lever free play adjustment steps:

a. Loosen the locknuts "1".
b. Turn the adjuster "2" until free play "a" is within the specified limits.
c. Tighten the locknuts.

	Locknut: **4 Nm (0.4 m•kg, 2.9 ft•lb)**

▲▲▲▲▲▲▲▲▲▲▲▲▲▲▲▲▲▲▲▲▲▲▲▲▲▲▲▲▲▲▲▲

TIP
- Before adjustment, expose the adjuster by moving the boot "3" and cap "4" away.
- Make minute adjustment on the lever side using the adjuster "5".
- After adjustment, check proper operation of clutch lever.

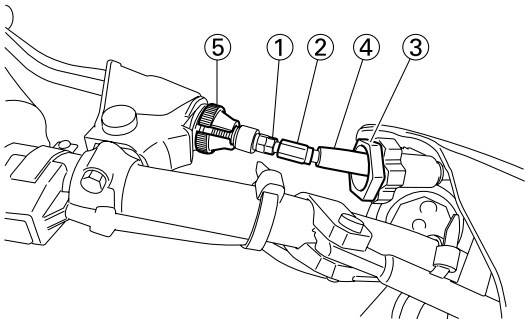

3. Install:
   - Cap "1"
   - Boot "2"

TIP
Place the tip "a" of the cap in the boot.

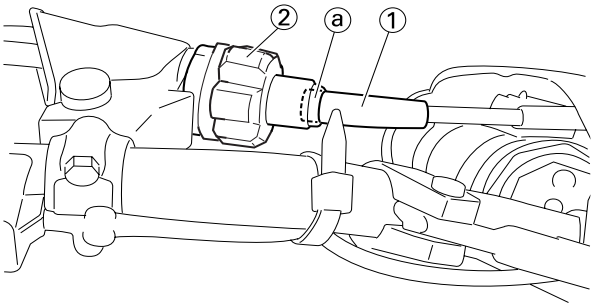

ADJUSTING THE THROTTLE CABLE FREE PLAY

1. Check:
   • Throttle grip free play "a"
   Out of specification → Adjust.

	Throttle grip free play "a": **3–5 mm (0.12–0.20 in)**

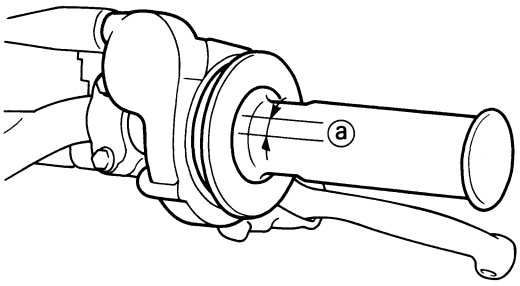

2. Adjust:
   • Throttle grip free play

▼▼▼▼▼▼▼▼▼▼▼▼▼▼▼▼▼▼▼▼▼▼▼▼▼▼▼▼▼▼▼▼▼▼

Throttle grip free play adjustment steps:

a. Slide the adjuster cover.
b. Loosen the locknut "1".
c. Turn the adjuster "2" until the specified free play is obtained.
d. Tighten the locknut.

	Locknut: **7 Nm (0.7 m•kg, 5.1 ft•lb)**

TIP

Before adjusting the throttle cable free play, the engine idle speed should be adjusted.

⚠ WARNING

After adjusting the throttle cable free play, start the engine and turn the handlebar to right and left and make sure that the engine idling does not run faster.

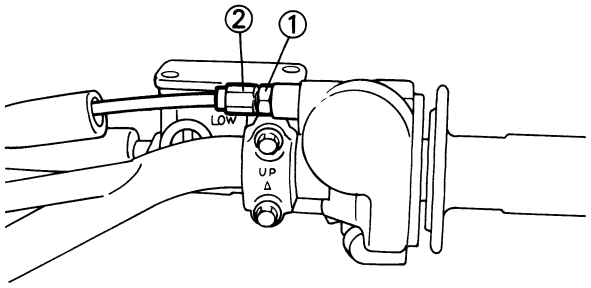

▲▲▲▲▲▲▲▲▲▲▲▲▲▲▲▲▲▲▲▲▲▲▲▲▲▲▲▲▲▲▲▲▲▲

LUBRICATING THE THROTTLE

1. Remove:
   • Cap cover "1"
   • Throttle cable cap "2"

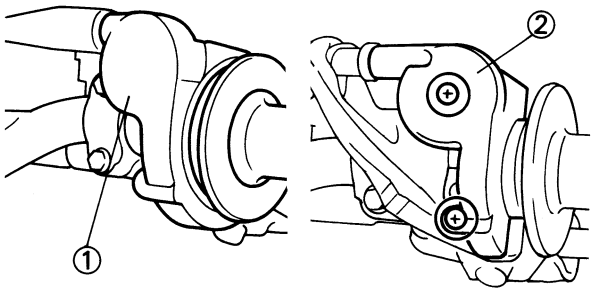

2. Apply:
   • Lithium soap base grease
   On the throttle cable end "a", tube guide cable winding portion "b" and roller sliding surface "c".

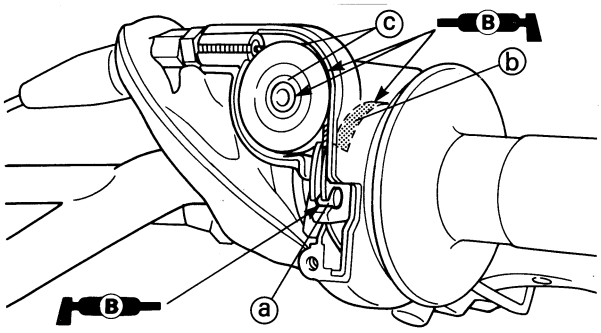

3. Install:
   • Throttle cable cap

	Throttle cable cap: **1 Nm (0.1 m•kg, 0.7 ft•lb)**

   • Cap cover

CLEANING THE AIR FILTER ELEMENT

TIP

Proper air filter maintenance is the biggest key to preventing premature engine wear and damage.

NOTICE

Never run the engine without the air filter element in place; this would allow dirt and dust to enter the engine and cause rapid wear and possible engine damage.

1. Remove:
   - Seat
   - Fitting bolt "1"
   - Washer "2"
   - Air filter element "3"
   - Air filter guide "4"

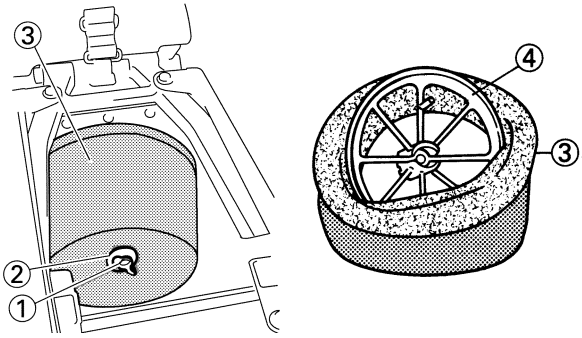

2. Clean:
   - Air filter element
     Clean them with solvent.

TIP

After cleaning, remove the remaining solvent by squeezing the element.

NOTICE

- **Do not twist the element when squeezing the element.**
- **Leaving too much of solvent in the element may result in poor starting.**

3. Inspect:
   - Air filter element
     Damage → Replace.
4. Apply:
   - Foam-air-filter oil or equivalent oil to the element

TIP

Squeeze out the excess oil. Element should be wet but not dripping.

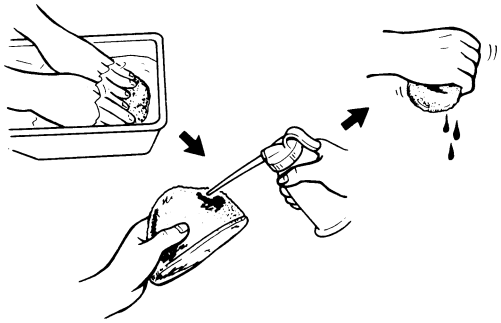

5. Install:
   - Air filter guide "1"

TIP

Align the projection "a" on filter guide with the hole "b" in air filter element.

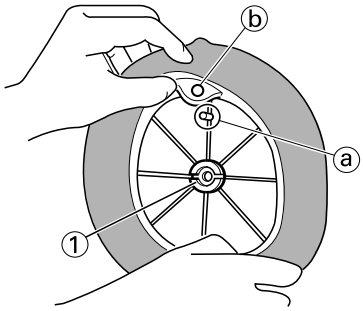

6. Apply:
   - Lithium soap base grease
     On the matching surface "a" on air filter element.

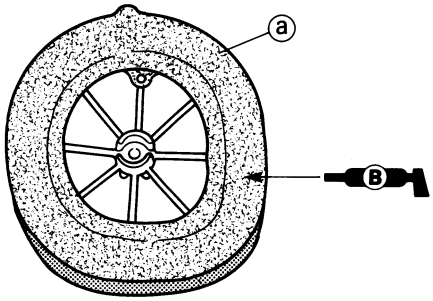

7. Install:
   - Air filter element "1"
   - Washer
   - Fitting bolt

	**Fitting bolt:** **2 Nm (0.2 m•kg, 1.4 ft•lb)**

TIP

Align the projection "a" on filter guide with the hole "b" in air filter case.

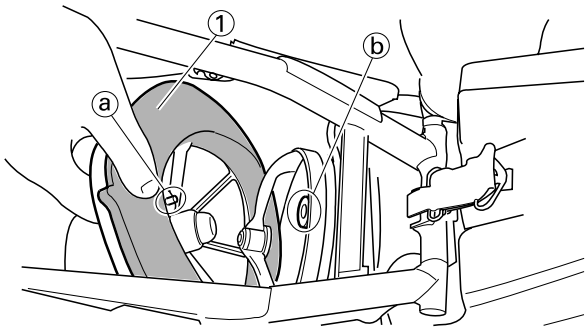

CHECKING THE TRANSMISSION OIL LEVEL

1. Start the engine, warm it up for several minutes and wait for five minutes.
2. Place the machine on a level place and hold it up on upright position by placing the suitable stand under the engine.
3. Check:
   • Transmission oil level

▼▼▼▼▼▼▼▼▼▼▼▼▼▼▼▼▼▼▼▼▼▼▼▼▼▼▼▼▼▼▼▼▼▼

Transmission oil level checking steps:

a. Remove the oil check bolt "1".
b. Inspect the oil level.

TIP

Be sure the machine is positioned straight up when inspecting the oil level.

⚠ WARNING

Never attempt to remove the oil check bolt just after high speed operation. The heated oil could spout out, causing danger. Wait until the oil cools down.

Oil flows out → Oil level is correct.
Oil does not flow out → Oil level is low. Add transmission oil until oil flows out.

	Recommended oil: **Yamalube 4 (SAE10W-40) or SAE10W-40 type SE motor oil**

c. Inspect the gasket (oil check bolt), replace if damaged.
d. Tighten the oil check bolt.

	Oil check bolt: **10 Nm (1.0 m•kg, 7.2 ft•lb)**

▲▲▲▲▲▲▲▲▲▲▲▲▲▲▲▲▲▲▲▲▲▲▲▲▲▲▲▲▲▲▲▲▲▲

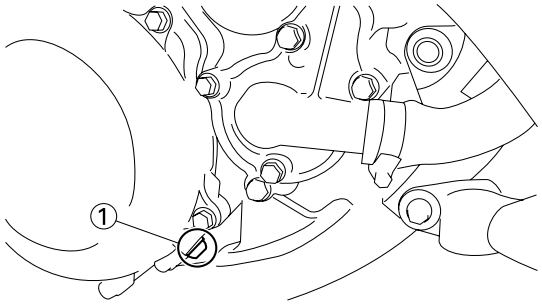

CHANGING THE TRANSMISSION OIL

1. Start the engine and warm it up for several minutes and wait for five minute.
2. Place the machine on a level place and hold it on upright position by placing the suitable stand under the engine.
3. Place a suitable container under the engine.
4. Remove:
   • Oil drain bolt "1"
   • Oil filler cap "2"
   Drain the transmission oil.

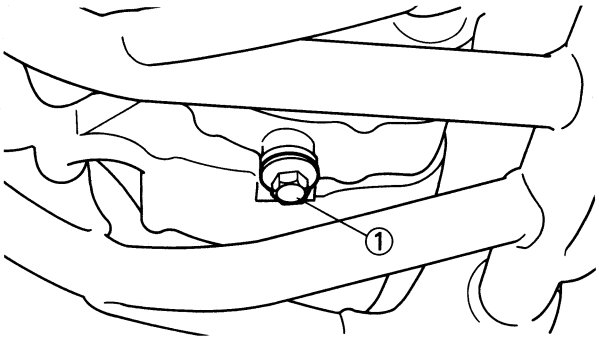

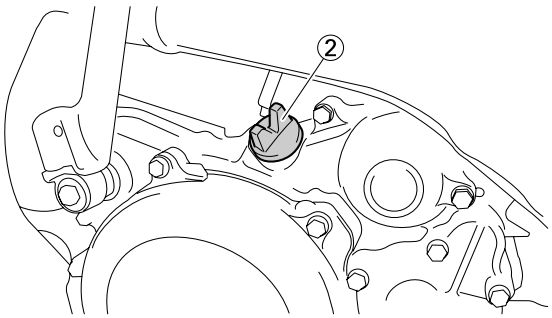

5. Install:
   • Aluminum washer New
   • Oil drain bolt "1"

	Oil drain bolt: **20 Nm (2.0 m•kg, 14 ft•lb)**

6. Fill:
   • Transmission oil

	Recommended oil: **Yamalube 4 (10W-40) or SAE 10W-40 type SE motor oil** **Oil capacity (periodic oil change):** **0.66 L (0.58 Imp qt, 0.69 US qt)**

7. Check:
   • Oil leakage
8. Check:
   • Transmission oil level
9. Install:
   • Oil filler cap "2"

ADJUSTING THE PILOT AIR SCREW

1. Adjust:
   • Pilot air screw "1"

▼▼▼▼▼▼▼▼▼▼▼▼▼▼▼▼▼▼▼▼▼▼▼▼▼▼▼▼▼▼

Adjustment steps:

a. Screw in the pilot air screw until it is lightly seated.
b. Back out by the specified number of turns.

	Pilot air screw: **2-1/4 turns out**

▲▲▲▲▲▲▲▲▲▲▲▲▲▲▲▲▲▲▲▲▲▲▲▲▲▲▲▲▲▲

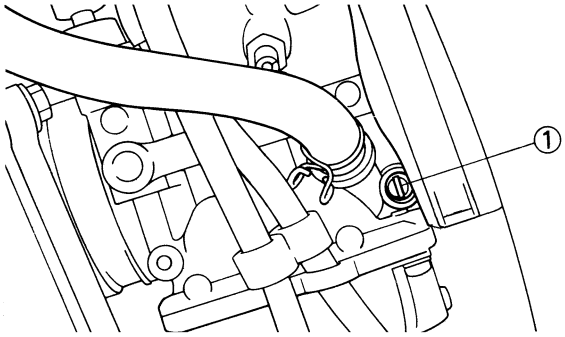

ADJUSTING THE ENGINE IDLING SPEED

1. Start the engine and thoroughly warm it up.
2. Adjust:
   • Engine idling speed

▼▼▼▼▼▼▼▼▼▼▼▼▼▼▼▼▼▼▼▼▼▼▼▼▼▼▼▼▼▼

Adjustment steps:

a. Loosen the locknut "1".
b. Turn the throttle stop screw "2" until the engine runs at the lowest possible speed.
c. Tighten the locknut.

To increase idle speed → Turn the throttle stop screw "2" in. **To decrease idle speed → Turn the throttle stop screw "2" out.**

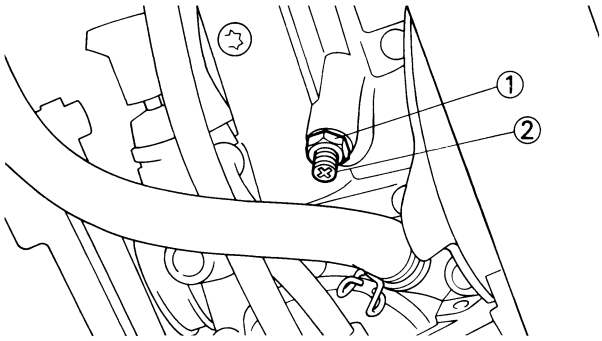

▲▲▲▲▲▲▲▲▲▲▲▲▲▲▲▲▲▲▲▲▲▲▲▲▲▲▲▲▲▲

CHECKING THE EXHAUST PIPE

1. Inspect:
   • O-ring "1"
   Damage → Replace.

TIP

Install the O-rings with their depressed "a" facing outward.

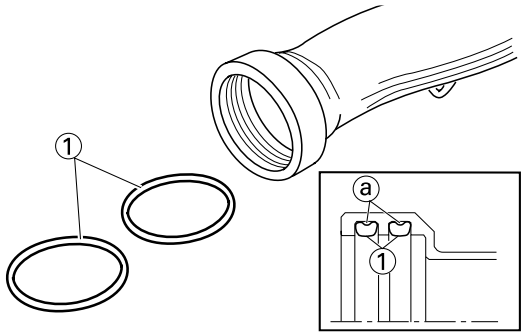

CHASSIS

BLEEDING THE HYDRAULIC BRAKE SYSTEM

⚠ WARNING

Bleed the brake system if:
- **The system has been disassembled.**
- **A brake hose has been loosened or removed.**
- **The brake fluid is very low.**
- **The brake operation is faulty.**

A dangerous loss of braking performance may occur if the brake system is not properly bled.

1. Remove:
   - Brake master cylinder cap
   - Diaphragm
   - Reservoir float (front brake)
   - Protector (rear brake)
2. Bleed:
   - Brake fluid

▼▼▼▼▼▼▼▼▼▼▼▼▼▼▼▼▼▼▼▼▼▼▼▼▼▼▼▼▼▼▼▼

Air bleeding steps:

a. Add proper brake fluid to the reservoir.
b. Install the diaphragm. Be careful not to spill any fluid or allow the reservoir to overflow.
c. Connect the clear plastic tube "2" tightly to the caliper bleed screw "1".

A

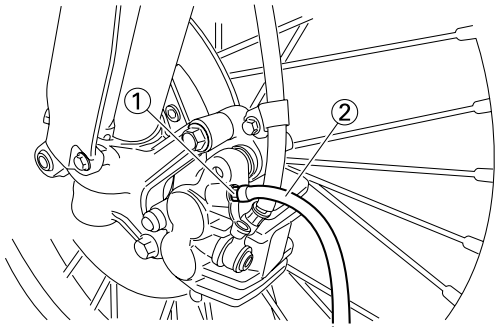

B

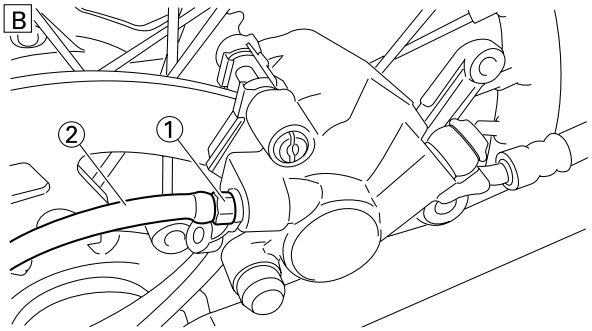

A. Front
B. Rear

d. Place the other end of the tube into a container.
e. Slowly apply the brake lever or pedal several times.
f. Pull the lever in or push down on the pedal. Hold the lever or pedal in position.
g. Loosen the bleed screw and allow the lever or pedal to travel towards its limit.
h. Tighten the bleed screw when the lever or pedal limit has been reached; then release the lever or pedal.

	Bleed screw: **6 Nm (0.6 m•kg, 4.3 ft•lb)**

i. Repeat steps (e) to (h) until of the air bubbles have been removed from the system.

TIP

If bleeding is difficult, it may be necessary to let the brake fluid system stabilize for a few hours. Repeat the bleeding procedure when the tiny bubbles in the system have disappeared.

j. Add brake fluid to the level line on the reservoir.

⚠ WARNING

Check the operation of the brake after bleeding the brake system.

▲▲▲▲▲▲▲▲▲▲▲▲▲▲▲▲▲▲▲▲▲▲▲▲▲▲▲▲▲▲▲▲

3. Install:
   - Protector (rear brake)
   - Reservoir float (front brake)
   - Diaphragm
   - Brake master cylinder cap

ADJUSTING THE FRONT BRAKE

1. Check:
   - Brake lever position "a"

	Brake lever position "a":
Standard position	**Extent of adjustment**
95 mm (3.74 in)	**86–105 mm (3.39–4.13 in)**

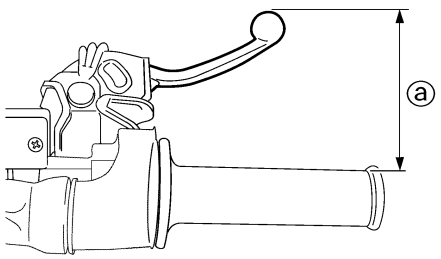

2. Remove:
   • Brake lever cover
3. Adjust:
   • Brake lever position

▼▼▼▼▼▼▼▼▼▼▼▼▼▼▼▼▼▼▼▼▼▼▼▼▼▼▼▼▼▼

Brake lever position adjustment steps:

a. Loosen the locknut "1".
b. Turn the adjusting bolt "2" until the lever position "a" is within specified position.

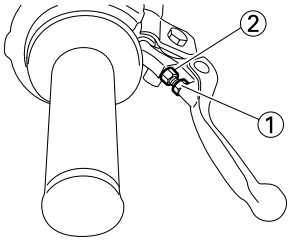

c. Tighten the locknut.

	Locknut: **5 Nm (0.5 m •kg, 3.6 ft•lb)**

⚠ WARNING

Be sure to tighten the locknut, as it will cause poor brake performance.

▲▲▲▲▲▲▲▲▲▲▲▲▲▲▲▲▲▲▲▲▲▲▲▲▲▲▲▲▲▲

4. Install:
   • Brake lever cover

ADJUSTING THE REAR BRAKE

1. Check:
   • Brake pedal height "a"
   Out of specification → Adjust.

	Brake pedal height "a": **Zero mm (Zero in)**



2. Adjust:
   • Brake pedal height

▼▼▼▼▼▼▼▼▼▼▼▼▼▼▼▼▼▼▼▼▼▼▼▼▼▼▼▼▼▼

Pedal height adjustment steps:

a. Loosen the locknut "1".
b. Turn the adjusting nut "2" until the pedal height "a" is within specified height.
c. Tighten the locknut.

⚠ WARNING

- **Adjust the pedal height between the maximum "A" and the minimum "B" as shown. (In this adjustment, the bolt "3" end "b" should protrude out of the threaded portion "4" but not be less than 2 mm (0.08 in) "c" away from the brake pedal "5").**
- **After the pedal height adjustment, make sure that the rear brake does not drag.**

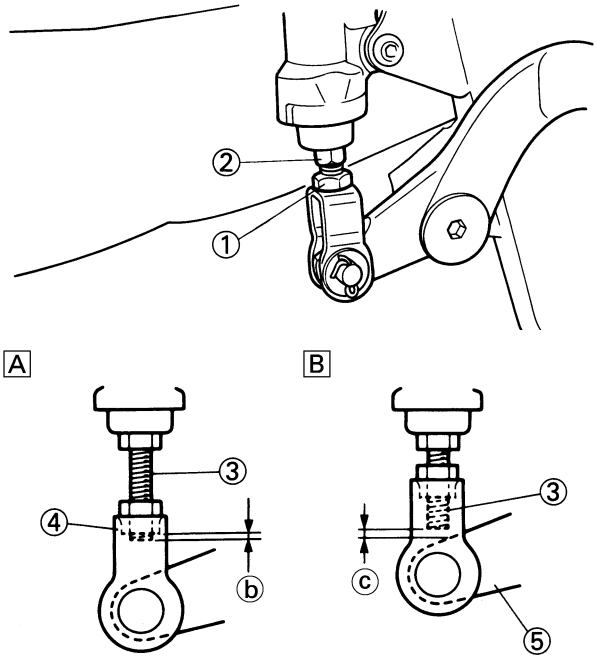

▲▲▲▲▲▲▲▲▲▲▲▲▲▲▲▲▲▲▲▲▲▲▲▲▲▲▲▲▲▲

CHECKING AND REPLACING THE FRONT BRAKE PADS

1. Inspect:
   • Brake pad thickness "a"
   Out of specification → Replace as a set.

	Brake pad thickness: **4.4 mm (0.17 in)** **<Limit>: 1.0 mm (0.04 in)**

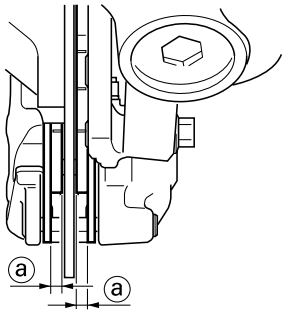

2. Replace:
   • Brake pad

▼▼▼▼▼▼▼▼▼▼▼▼▼▼▼▼▼▼▼▼▼▼▼▼▼▼▼▼▼▼▼▼

Brake pad replacement steps:

a. Remove the pad pin plug "1".

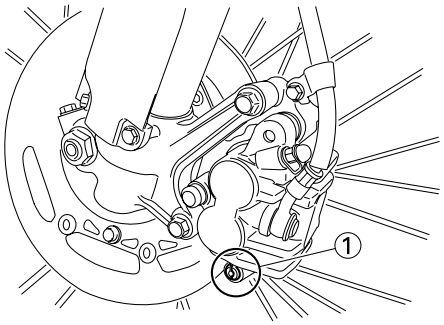

b. Loosen the pad pin "2".
c. Remove the brake caliper "3" from the front fork.

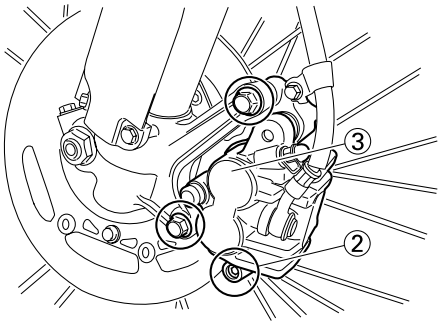

d. Remove the pad pin and brake pads "4".

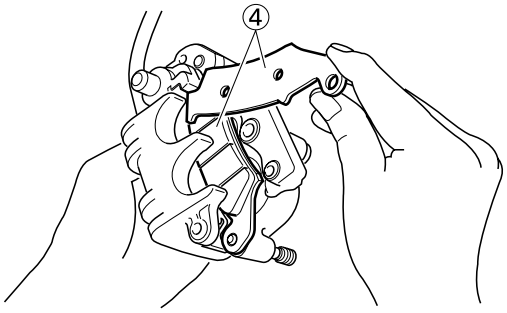

e. Connect the transparent hose "5" to the bleed screw "6" and place the suitable container under its end.

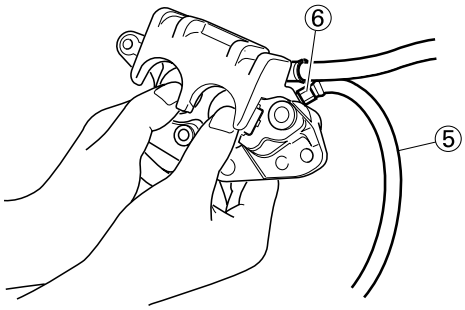

f. Loosen the bleed screw and push the brake caliper piston in.

⚠ WARNING

Do not reuse the drained brake fluid.

g. Tighten the bleed screw.

	Bleed screw: **6 Nm (0.6 m•kg, 4.3 ft•lb)**

h. Install the brake pads "7" and pad pin.

TIP

- Install the brake pads with their projections "a" into the brake caliper recesses "b".
- Temporarily tighten the pad pin at this point.

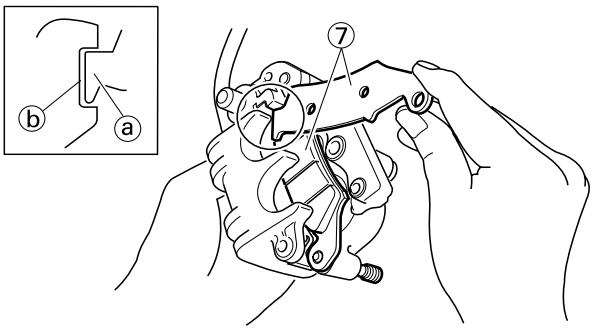

i. Install the brake caliper "8" and tighten the pad pin "9".

	Bolt (brake caliper): **28 Nm (2.8 m•kg, 20 ft•lb)** **Pad pin:** **18 Nm (1.8 m•kg, 13 ft•lb)**

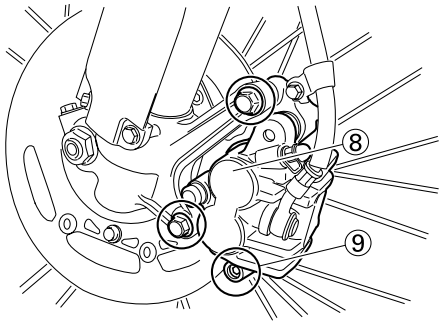

j. Install the pad pin plug "10".

	Pad pin plug: **3 Nm (0.3 m•kg, 2.2 ft•lb)**

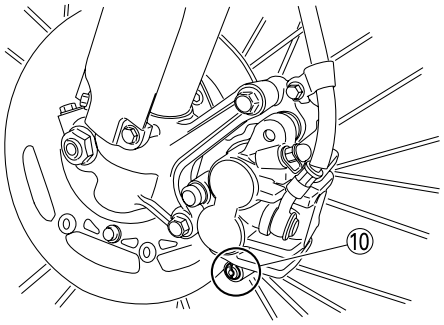

▲▲▲▲▲▲▲▲▲▲▲▲▲▲▲▲▲▲▲▲▲▲▲▲▲▲▲▲▲▲

3. Inspect:
   • Brake fluid level
   Refer to "CHECKING THE BRAKE FLUID LEVEL" section.
4. Check:
   • Brake lever operation
   A softy or spongy feeling → Bleed brake system.
   Refer to "BLEEDING THE HYDRAULIC BRAKE SYSTEM" section.

CHECKING AND REPLACING THE REAR BRAKE PADS

1. Inspect:
   • Brake pad thickness "a"
   Out of specification → Replace as a set.

	Brake pad thickness: **6.4 mm (0.25 in)** **<Limit>: 1.0 mm (0.04 in)**

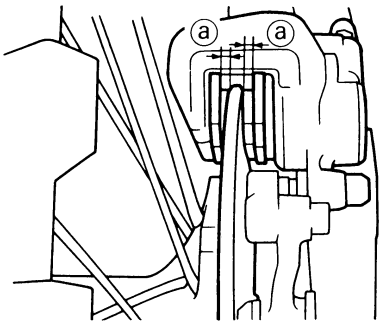

2. Replace:
   • Brake pad

▼▼▼▼▼▼▼▼▼▼▼▼▼▼▼▼▼▼▼▼▼▼▼▼▼▼▼▼▼▼

Brake pad replacement steps:

a. Remove the protector "1" and pad pin plug "2".

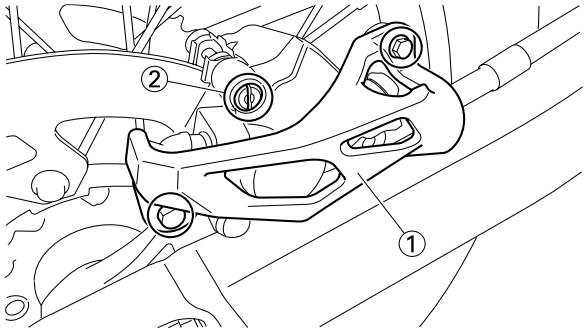

b. Loosen the pad pin "3".
c. Remove the rear wheel "4" and brake caliper "5".
   Refer to "FRONT WHEEL AND REAR WHEEL" section in the CHAPTER 5.

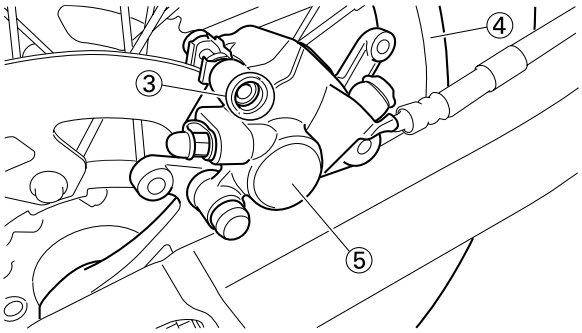

d. Remove the pad pin "6" and brake pads "7".

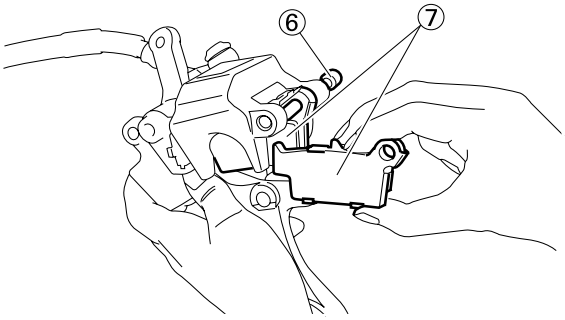

e. Connect the transparent hose "8" to the bleed screw "9" and place the suitable container under its end.

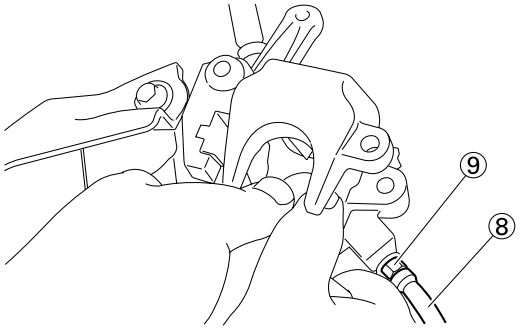

f. Loosen the bleed screw and push the brake caliper piston in.

⚠ WARNING

Do not reuse the drained brake fluid.

g. Tighten the bleed screw.

	Bleed screw: **6 Nm (0.6 m•kg, 4.3 ft•lb)**

h. Install the brake pad "10" and pad pin "11".

TIP

- Install the brake pads with their projections "a" into the brake caliper recesses "b".
- Temporarily tighten the pad pin at this point.

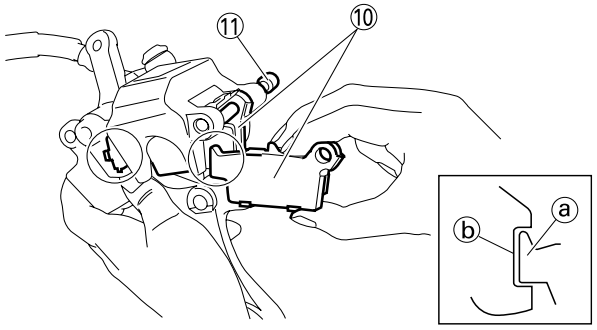

i. Install the brake caliper "12" and rear wheel "13".
Refer to "FRONT WHEEL AND REAR WHEEL" section in the CHAPTER 5.

j. Tighten the pad pin "14".

	Pad pin: **18 Nm (1.8 m•kg, 13 ft•lb)**

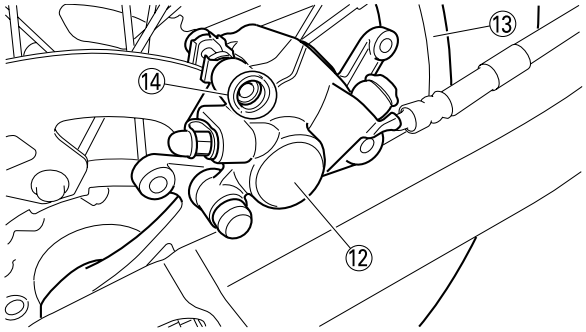

k. Install the pad pin plug "15" and protector "16".

	Pad pin plug: **3 Nm (0.3 m•kg, 2.2 ft•lb)** **Bolt (protector):** **7 Nm (0.7 m•kg, 5.1 ft•lb)**

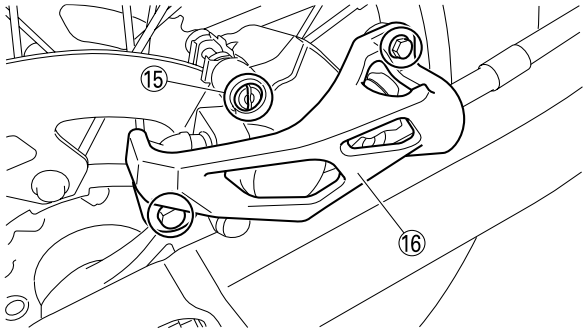

▲▲▲▲▲▲▲▲▲▲▲▲▲▲▲▲▲▲▲▲▲▲▲▲▲▲▲▲▲▲▲▲▲▲

3. Inspect:
   - Brake fluid level
     Refer to "CHECKING THE BRAKE FLUID LEVEL" section.
4. Check:
   - Brake pedal operation
     A softy or spongy feeling → Bleed brake system.
     Refer to "BLEEDING THE HYDRAULIC BRAKE SYSTEM" section.

CHECKING THE REAR BRAKE PAD INSULATOR

1. Remove:
   - Brake pad
     Refer to "CHECKING AND REPLACING THE REAR BRAKE PADS" section.
2. Inspect:
   - Rear brake pad insulator "1"
     Damage → Replace.

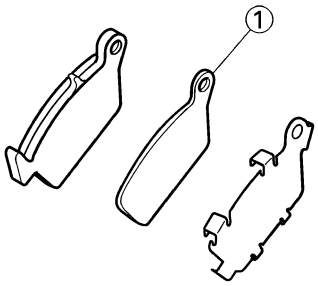

CHECKING THE BRAKE FLUID LEVEL

1. Place the brake master cylinder so that its top is in a horizontal position.
2. Inspect:
   - Brake fluid level
     Fluid at lower level → Fill up.

	Recommended brake fluid: **DOT #4**

⚠ WARNING

- **Use only designated quality brake fluid to avoid poor brake performance.**
- **Refill with same type and brand of brake fluid; mixing fluids could result in poor brake performance.**
- **Be sure that water or other contaminants do not enter master cylinder when refilling.**
- **Clean up spilled fluid immediately to avoid erosion of painted surfaces or plastic parts.**

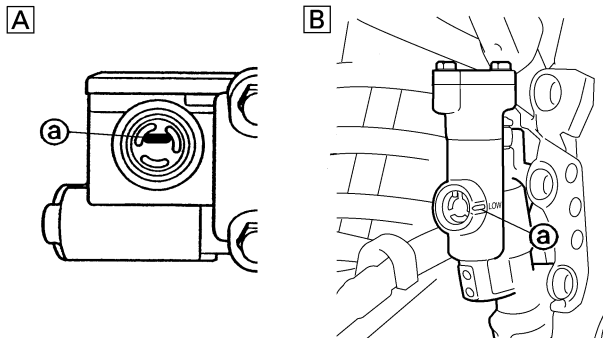

a. Lower level
A. Front
B. Rear

CHECKING THE SPROCKET

1. Inspect:
   - Sprocket teeth "a"
     Excessive wear → Replace.

TIP

Replace the drive sprocket, rear wheel sprocket and drive chain as a set.

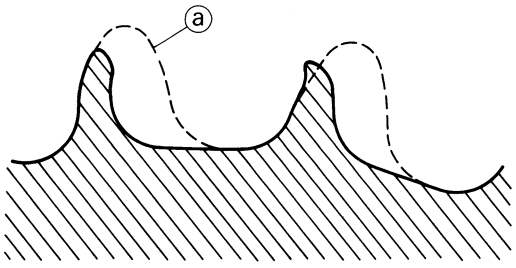

CHECKING THE DRIVE CHAIN

1. Measure:
   - Drive chain length (15 links) "a"
     Out of specification → Replace.

	Drive chain length (15 links): **<Limit>: 242.9 mm (9.563 in)**

TIP

- While measuring the drive chain length, push down on the drive chain to increase its tension.
- Measure the length between drive chain roller "1" and "16" as shown.
- Perform this measurement at two or three different places.

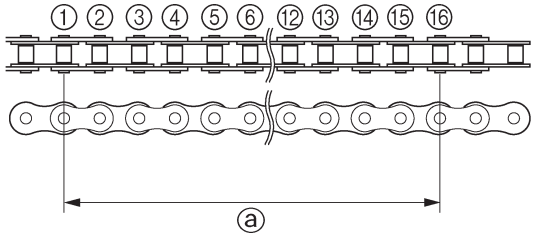

2. Remove:
   - Master link clip
   - Joint "1"
   - Drive chain "2"

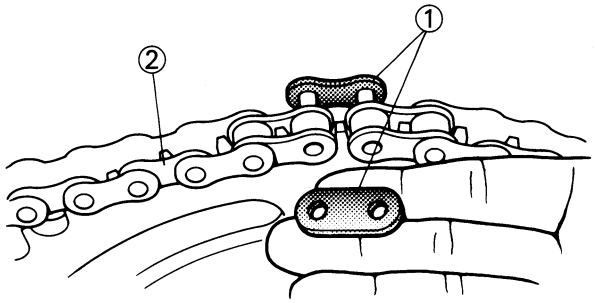

3. Clean:
   - Drive chain
     Place it in kerosene, and brush off as much dirt as possible. Then remove the drive chain from the kerosene and dry the drive chain.

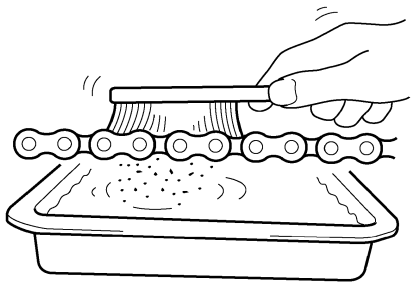

I2510301

4. Check:
   • Drive chain stiffness "a"
   Clean and oil the drive chain and hold as illustrated.
   Stiff → Replace the drive chain.

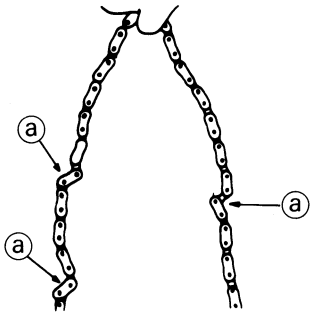

5. Install:
   • Drive chain "1"
   • Joint "2"
   • Master link clip "3" New

⚠ WARNING

Be sure to install the master link clip to the direction as shown.

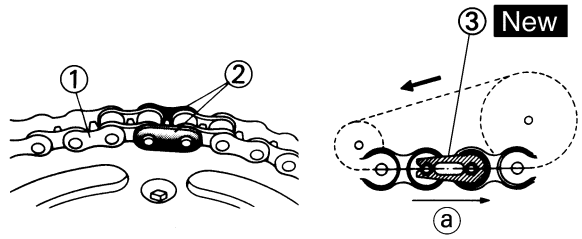

a. Turning direction

6. Lubricate:
   • Drive chain

	Drive chain lubricant: **SAE 10W-30 motor oil or suitable chain lubricants**

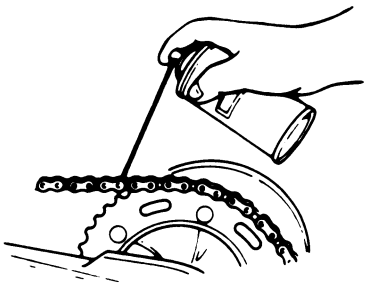

ADJUSTING THE DRIVE CHAIN SLACK

1. Elevate the rear wheel by placing the suitable stand under the engine.
2. Check:
   • Drive chain slack "a"
   Above the seal guard installation bolt.
   Out of specification → Adjust.

	Drive chain slack: **48–58 mm (1.9–2.3 in)**

TIP

Before checking and/or adjusting, rotate the rear wheel through several revolutions and check the slack several times to find the tightest point. Check and/or adjust the drive chain slack with the rear wheel in this "tight chain" position.

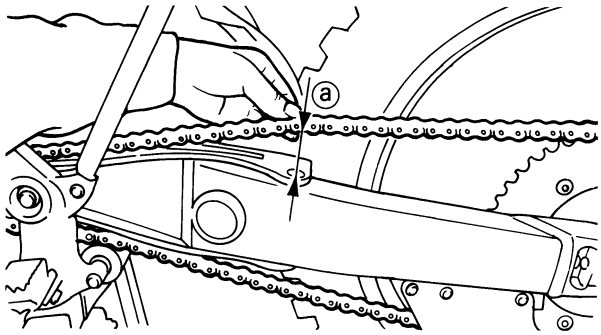

3. Adjust:
   • Drive chain slack

▼▼▼▼▼▼▼▼▼▼▼▼▼▼▼▼▼▼▼▼▼▼▼▼▼▼▼▼▼▼▼▼

Drive chain slack adjustment steps:

a. Loosen the axle nut "1" and locknuts "2".
b. Adjust the drive chain slack by turning the adjusters "3".

To tighten → Turn the adjuster "3" counterclockwise.
To loosen → Turn the adjuster "3" clockwise and push wheel forward.

c. Turn each adjuster exactly the same amount to maintain correct axle alignment. (There are marks "a" on each side of the drive chain puller alignment.) ***NOTICE:*** **Improper drive chain slack will overload the engine as well as other vital parts of the motorcycle and can lead to chain slippage or breakage. To prevent this from occurring, keep the drive chain slack within the specified limits.**

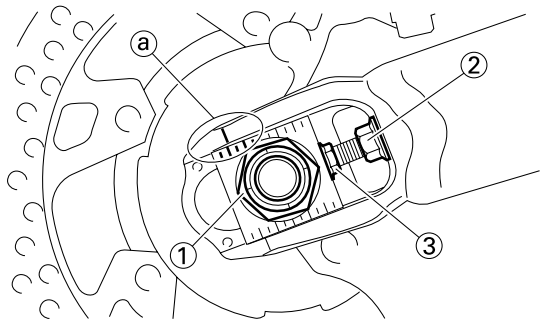

TIP
Turn the adjuster so that the drive chain is in line with the sprocket, as viewed from the rear.

d. Tighten the axle nut while pushing down the drive chain.

	Axle nut: **125 Nm (12.5 m•kg, 90 ft•lb)**

e. Tighten the locknuts.

	Locknut: **19 Nm (1.9 m•kg, 13 ft•lb)**

▲▲▲▲▲▲▲▲▲▲▲▲▲▲▲▲▲▲▲▲▲▲▲▲▲▲▲▲▲▲▲▲

CHECKING THE FRONT FORK

1. Inspect:
   - Front fork smooth action
     Operate the front brake and stroke the front fork.
     Unsmooth action/oil leakage → Repair or replace.

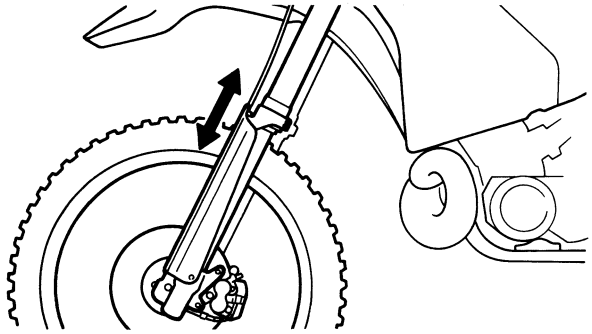

CLEANING THE FRONT FORK OIL SEAL AND DUST SEAL

1. Remove:
   - Protector
   - Dust seal "1"

TIP
Use a thin screw driver, and be careful not to damage the inner fork tube and dust seal.

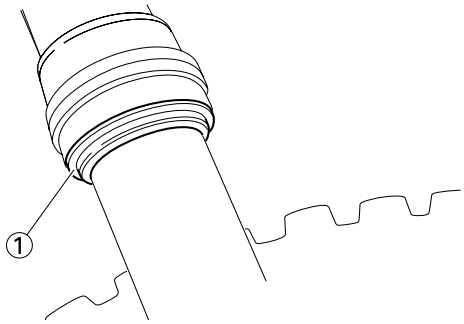

2. Clean:
   - Dust seal "a"
   - Oil seal "b"

TIP
- Clean the dust seal and oil seal after every run.
- Apply the lithium soap base grease on the inner tube.

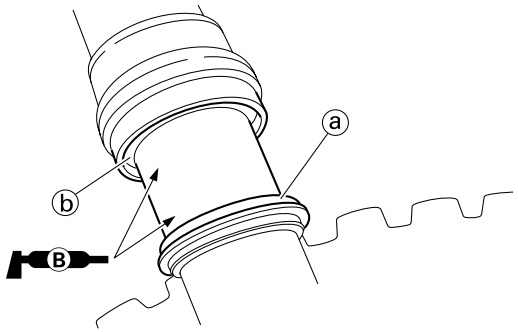

RELIEVING THE FRONT FORK INTERNAL PRESSURE

TIP
If the front fork initial movement feels stiff during a run, relieve the front fork internal pressure.

1. Elevate the front wheel by placing a suitable stand under the engine.
2. Remove the air bleed screw "1" and release the internal pressure from the front fork.
3. Install:
   - Air bleed screw

	Air bleed screw: **1 Nm (0.1 m•kg, 0.7 ft•lb)**

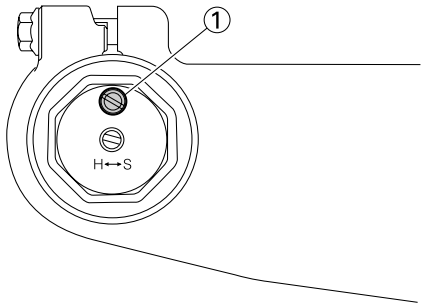

ADJUSTING THE FRONT FORK REBOUND DAMPING FORCE

1. Adjust:
   • Rebound damping force
   By turning the adjuster "1".

Stiffer "a" → Increase the rebound damping force. (Turn the adjuster "1" in.)
Softer "b" → Decrease the rebound damping force. (Turn the adjuster "1" out.)

	Extent of adjustment:	
	Maximum	**Minimum**
	Fully turned in position	**20 clicks out (from maximum position)**

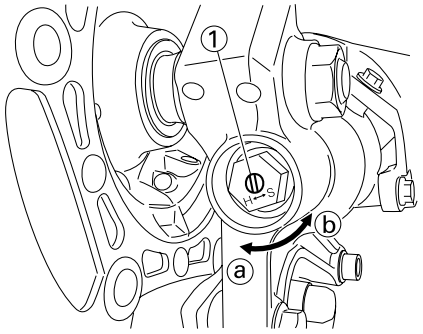

• STANDARD POSITION:
This is the position which is back by the specific number of clicks from the fully turned-in position.

Standard position:
14 clicks out
*** 13 clicks out**

* For EUROPE

NOTICE

Do not force the adjuster past the minimum or maximum extent of adjustment. The adjuster may be damaged.

⚠ WARNING

Always adjust each front fork to the same setting. Uneven adjustment can cause poor handling and loss of stability.

ADJUSTING THE FRONT FORK COMPRESSION DAMPING FORCE

1. Adjust:
   • Compression damping force
   By turning the adjuster "1".

Stiffer "a" → Increase the compression damping force. (Turn the adjuster "1" in.)
Softer "b" → Decrease the compression damping force. (Turn the adjuster "1" out.)

	Extent of adjustment:	
	Maximum	**Minimum**
	Fully turned in position	**20 clicks out (from maximum position)**

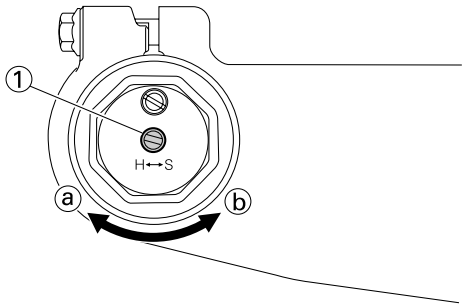

• STANDARD POSITION:
This is the position which is back by the specific number of clicks from the fully turned-in position.

Standard position:
13 clicks out
*** 12 clicks out**

* For EUROPE

NOTICE

Do not force the adjuster past the minimum or maximum extent of adjustment. The adjuster may be damaged.

⚠ WARNING

Always adjust each front fork to the same setting. Uneven adjustment can cause poor handling and loss of stability.

CHECKING THE REAR SHOCK ABSORBER

1. Inspect:
   • Swingarm smooth action
   Abnormal noise/unsmooth action → Grease the pivoting points or repair the pivoting points.
   Damage/oil leakage → Replace.

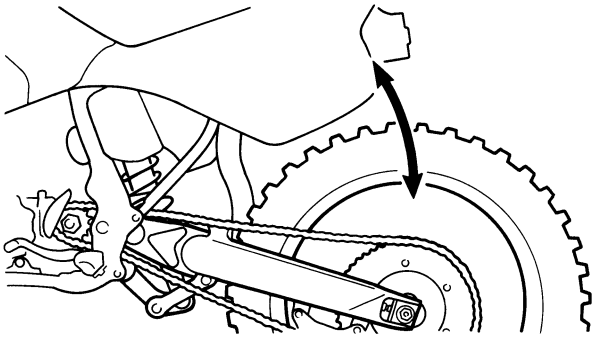

ADJUSTING THE REAR SHOCK ABSORBER SPRING PRELOAD

1. Elevate the rear wheel by placing the suitable stand under the engine.
2. Remove:
   • Rear frame
3. Measure:
   • Spring fitting length

Standard fitting length:	
I.D. MARK/ Q'TY	**Length**
Red/1	**258 mm (10.16 in)** ***252 mm (9.92 in)**
Red/2	**264 mm (10.39 in)** ***258 mm (10.16 in)**
Red/3	**255.5 mm (10.06 in)** ***249.5 mm (9.82 in)**

*For EUROPE

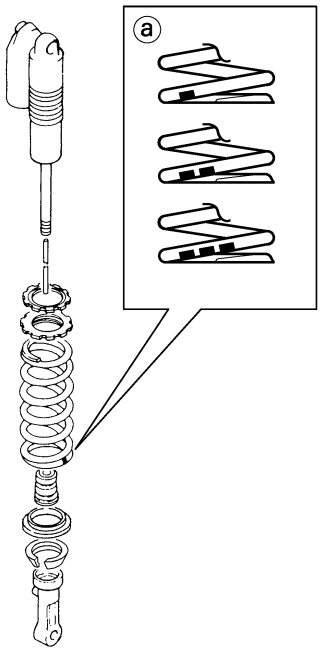

TIP

- The I.D. mark "a" is marked at the end of the spring.
- Spring specification varies according to the difference in the production lot.

4. Adjust:
   • Spring preload

▼▼▼▼▼▼▼▼▼▼▼▼▼▼▼▼▼▼▼▼▼▼▼▼▼▼▼▼▼▼▼▼▼▼

Adjustment steps:

a. Loosen the locknut "1".
b. Loosen the adjuster "2" until there is some clearance between the spring and adjuster.
c. Measure the spring free length "a".
d. Turn the adjuster "2".

Stiffer →Increase the spring preload. (Turn the adjuster "2" in.)
Softer → Decrease the spring preload. (Turn the adjuster "2" out.)

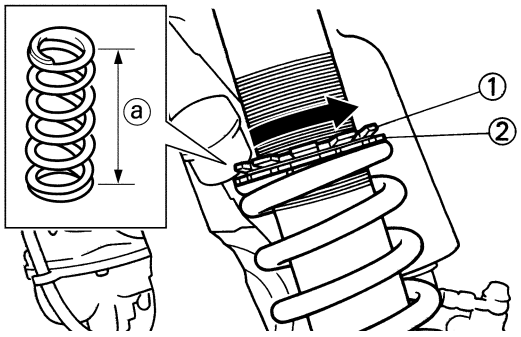

Extent of adjustment:	
Maximum	**Minimum**
Position in which the spring is turned in 13 mm (0.51 in) from its free length.	**Position in which the spring is turned in 1.5 mm (0.06 in) from its free length.**

TIP

- Be sure to remove all dirt and mud from around the locknut and adjuster before adjustment.
- The length of the spring (installed) changes 1.5 mm (0.06 in) per turn of the adjuster.

NOTICE

Never attempt to turn the adjuster beyond the maximum or minimum setting.

e. Tighten the locknut.

Locknut:
30 Nm (3.0 m•kg, 22 ft•lb)

▲▲▲▲▲▲▲▲▲▲▲▲▲▲▲▲▲▲▲▲▲▲▲▲▲▲▲▲▲▲▲▲▲▲

5. Install:
   • Rear frame (upper)

	Rear frame (upper): 32 Nm (3.2 m•kg, 23 ft•lb)

   • Rear frame (lower)

	Rear frame (lower): 29 Nm (2.9 m•kg, 21 ft•lb)

ADJUSTING THE REAR SHOCK ABSORBER REBOUND DAMPING FORCE

1. Adjust:
   • Rebound damping force
   By turning the adjuster "1".

Stiffer "a" → Increase the rebound damping force. (Turn the adjuster "1" in.)
Softer "b" → Decrease the rebound damping force. (Turn the adjuster "1" out.)

	Extent of adjustment:

Maximum	Minimum
Fully turned in position	20 clicks out (from maximum position)

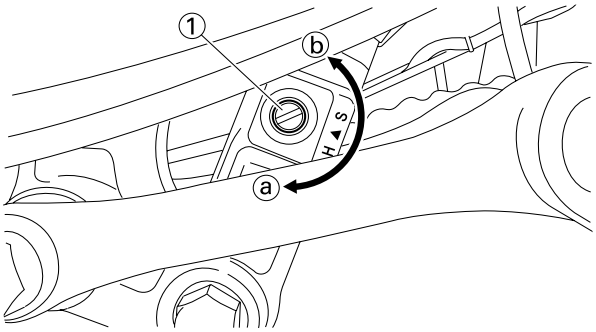

   • STANDARD POSITION:
   This is the position which is back by the specific number of clicks from the fully turned-in position. (Which align the punch mark "a" on the adjuster with the punch mark "b" on the bracket.)

	Standard position: About 11 clicks out * About 12 clicks out

* For EUROPE

NOTICE

Do not force the adjuster past the minimum or maximum extent of adjustment. The adjuster may be damaged.

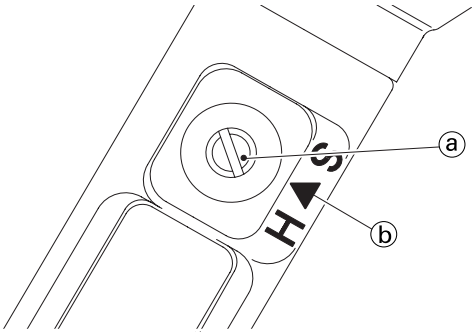

ADJUSTING THE REAR SHOCK ABSORBER LOW COMPRESSION DAMPING FORCE

1. Adjust:
   • Low compression damping force
   By turning the adjuster "1".

Stiffer "a" →Increase the low compression damping force. (Turn the adjuster "1" in.)
Softer "b" → Decrease the low compression damping force. (Turn the adjuster "1" out.)

	Extent of adjustment:

Maximum	Minimum
Fully turned in position	20 clicks out (from maximum position)

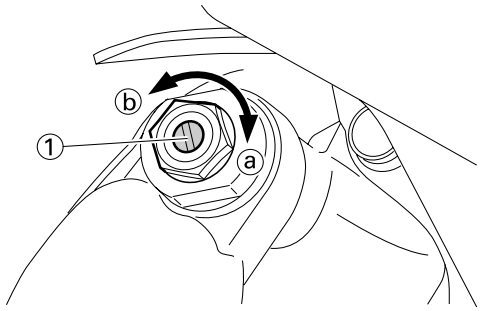

   • STANDARD POSITION:
   This is the position which is back by the specific number of clicks from the fully turned-in position. (Which align the punch mark "a" on the adjuster with the punch mark "b" on the high compression damping adjuster.)

	Standard position: About 13 clicks out

NOTICE

Do not force the adjuster past the minimum or maximum extent of adjustment. The adjuster may be damaged.

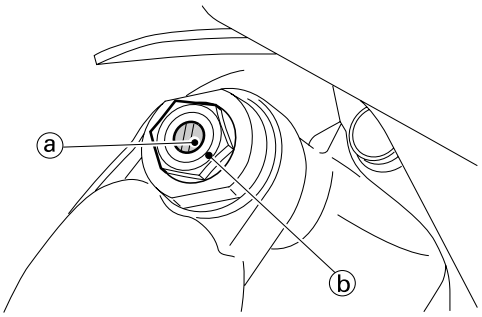

ADJUSTING THE REAR SHOCK ABSORBER HIGH COMPRESSION DAMPING FORCE

1. Adjust:
   - High compression damping force
     By turning the adjuster "1".

Stiffer "a" → Increase the high compression damping force. (Turn the adjuster "1" in.)
Softer "b" → Decrease the high compression damping force. (Turn the adjuster "1" out.)

Extent of adjustment:

Maximum	Minimum
Fully turned in position	2 turns out (from maximum position)

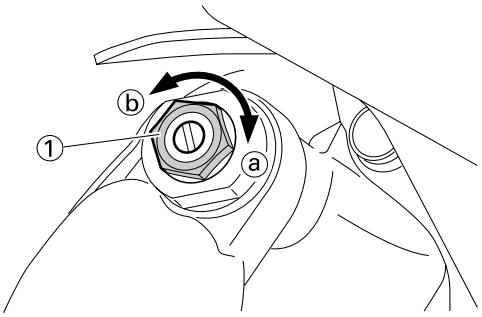

- STANDARD POSITION:
  This is the position which is back by the specific number of turns from the fully turned-in position. (Which align the punch mark "a" on the adjuster with the punch mark "b" on the adjuster body.)

Standard position:
About 1-1/2 turns out

NOTICE

Do not force the adjuster past the minimum or maximum extent of adjustment. The adjuster may be damaged.

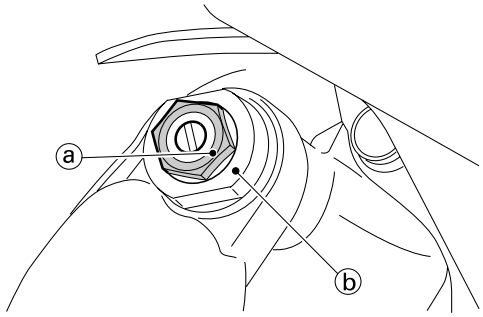

CHECKING THE TIRE PRESSURE

1. Measure:
   - Tire pressure
     Out of specification → Adjust.

Standard tire pressure:
100 kPa (1.0 kgf/cm^2, 15 psi)

TIP

- Check the tire while it is cold.
- Loose bead stoppers allow the tire to slip off its position on the rim when the tire pressure is low.
- A tilted tire valve stem indicates that the tire slips off its position on the rim.
- If the tire valve stem is found tilted, the tire is considered to be slipping off its position. Correct the tire position.

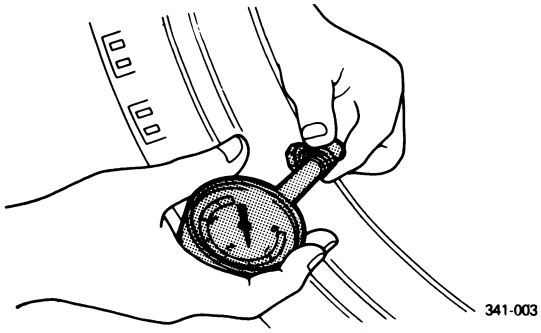

CHECKING AND TIGHTENING THE SPOKES

The following procedure applies to all of the spokes.

1. Check:
   • Spokes
   Bend/damage → Replace.
   Loose spoke → Retighten.
   Tap the spokes with a screwdriver.

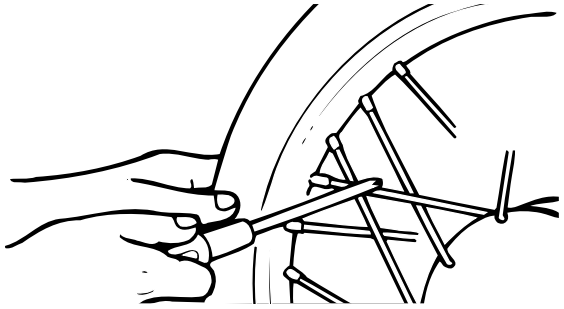

TIP
A tight spoke will emit a clear, ringing tone; a loose spoke will sound flat.

2. Tighten:
   • Spokes
   (with a spoke nipple wrench "1")

TIP
Be sure to tighten the spokes before and after break-in.

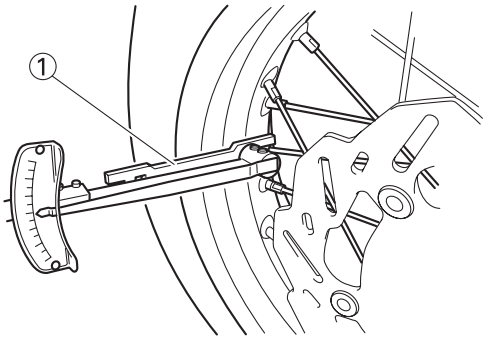

	Spoke nipple wrench: YM-01521/90980-01521
	Spokes: 3 Nm (0.3 m•kg, 2.2 ft•lb)

CHECKING THE WHEELS

1. Inspect:
   • Wheel runout
   Elevate the wheel and turn it.
   Abnormal runout → Replace.

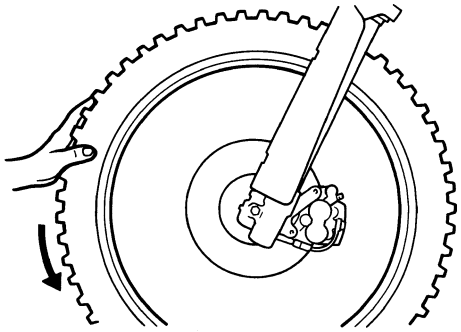

2. Inspect:
   • Bearing free play
   Exist play → Replace.

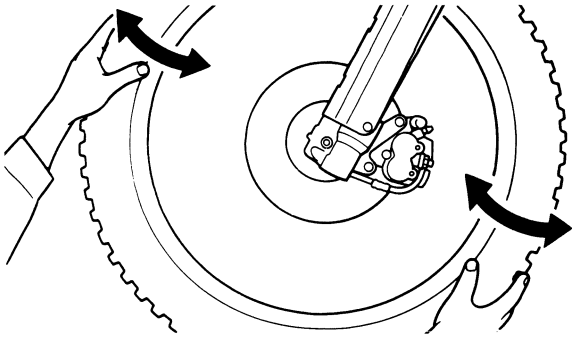

CHECKING AND ADJUSTING THE STEERING HEAD

1. Place a stand under the engine to raise the front wheel off theground. **WARNING! Securely support the vehicle so that there is no danger of it falling over.**
2. Check:
   • Steering stem
   Grasp the bottom of the forks and gently rock the fork assembly back and forth.
   Free play → Adjust steering head.

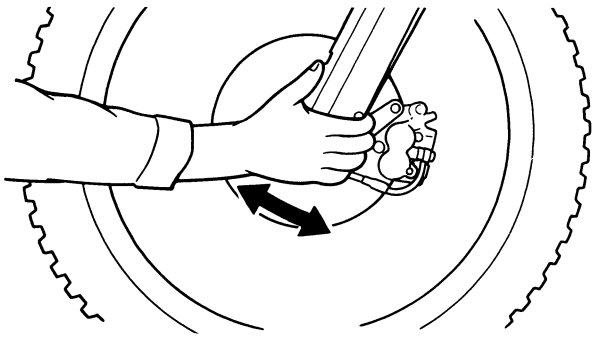

3. Check:
   • Steering smooth action
   Turn the handlebar lock to lock.
   Unsmooth action → Adjust steering ring nut.

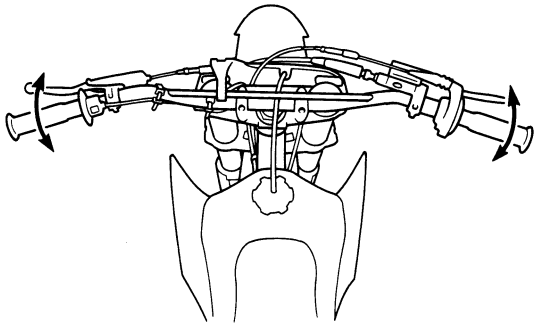

4. Adjust:
   • Steering ring nut

▼▼▼▼▼▼▼▼▼▼▼▼▼▼▼▼▼▼▼▼▼▼▼▼▼▼▼▼▼▼▼▼▼▼

Steering ring nut adjustment steps:

a. Remove the number plate.
b. Remove the handlebar and upper bracket.
c. Loosen the steering ring nut "1" using the steering nut wrench "2".

	Steering nut wrench: **YU-33975/90890-01403**

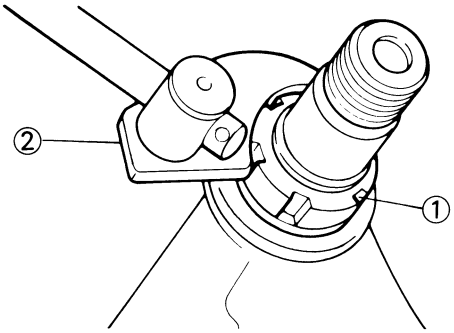

d. Tighten the steering ring nut "3" using steering nut wrench "4".

TIP

- Apply the lithium soap base grease on the thread of the steering stem.
- Set the torque wrench to the steering nut wrench so that they form a right angle.

	Steering nut wrench: **YU-33975/90890-01403**
	Steering ring nut (initial tightening): **38 Nm (3.8 m•kg, 27 ft•lb)**

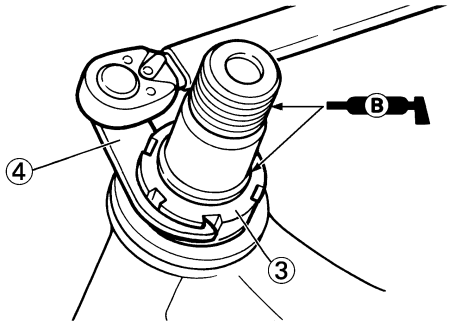

e. Loosen the steering ring nut one turn.
f. Retighten the steering ring nut using the steering nut wrench.

⚠ WARNING

Avoid over-tightening.

	Steering ring nut (final tightening): **7 Nm (0.7 m•kg, 5.1 ft•lb)**

g. Check the steering stem by turning it lock to lock. If there is any binding, remove the steering stem assembly and inspect the steering bearings.
h. Install the washer "5", upper bracket "6", washer "7", steering stem nut "8", handlebar "9", handlebar upper holder "10" and number plate "11".

TIP

- The handlebar upper holder should be installed with the punched mark "a" forward.
- Install the handlebar so that the marks "b" are in place on both sides.
- Install the handlebar so that the projection "c" of the handlebar upper holder is positioned at the mark on the handlebar as shown.
- Insert the end of the fuel breather hose "12" into the hole in the steering stem.

NOTICE

First tighten the bolts on the front side of the handlebar upper holder, and then tighten the bolts on the rear side.

	Steering stem nut: **145 Nm (14.5 m•kg, 105 ft•lb)** **Handlebar upper holder:** **28 Nm (2.8 m•kg, 20 ft•lb)** **Pinch bolt (upper bracket):** **21 Nm (2.1 m•kg, 15 ft•lb)** **Number plate:** **7 Nm (0.7 m•kg, 5.1 ft•lb)**

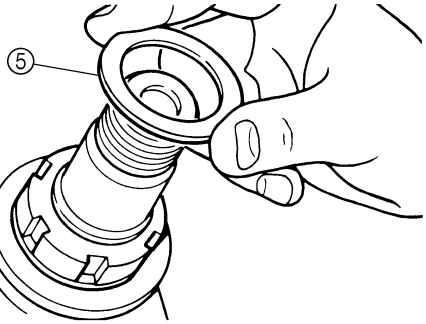
⑤

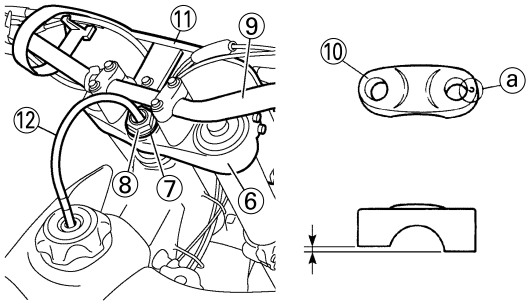
⑪
⑨
⑩
ⓐ
⑫
⑧
⑦
⑥

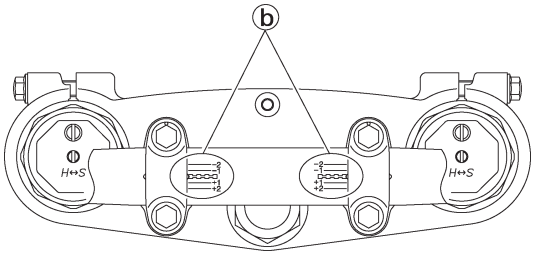
ⓑ
H↔S
H↔S

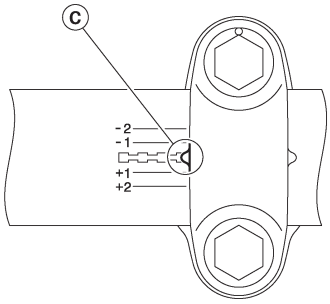
ⓒ
-2
-1
+1
+2

▲▲▲▲▲▲▲▲▲▲▲▲▲▲▲▲▲▲▲▲▲▲▲▲▲▲▲▲▲▲▲▲▲▲

LUBRICATION

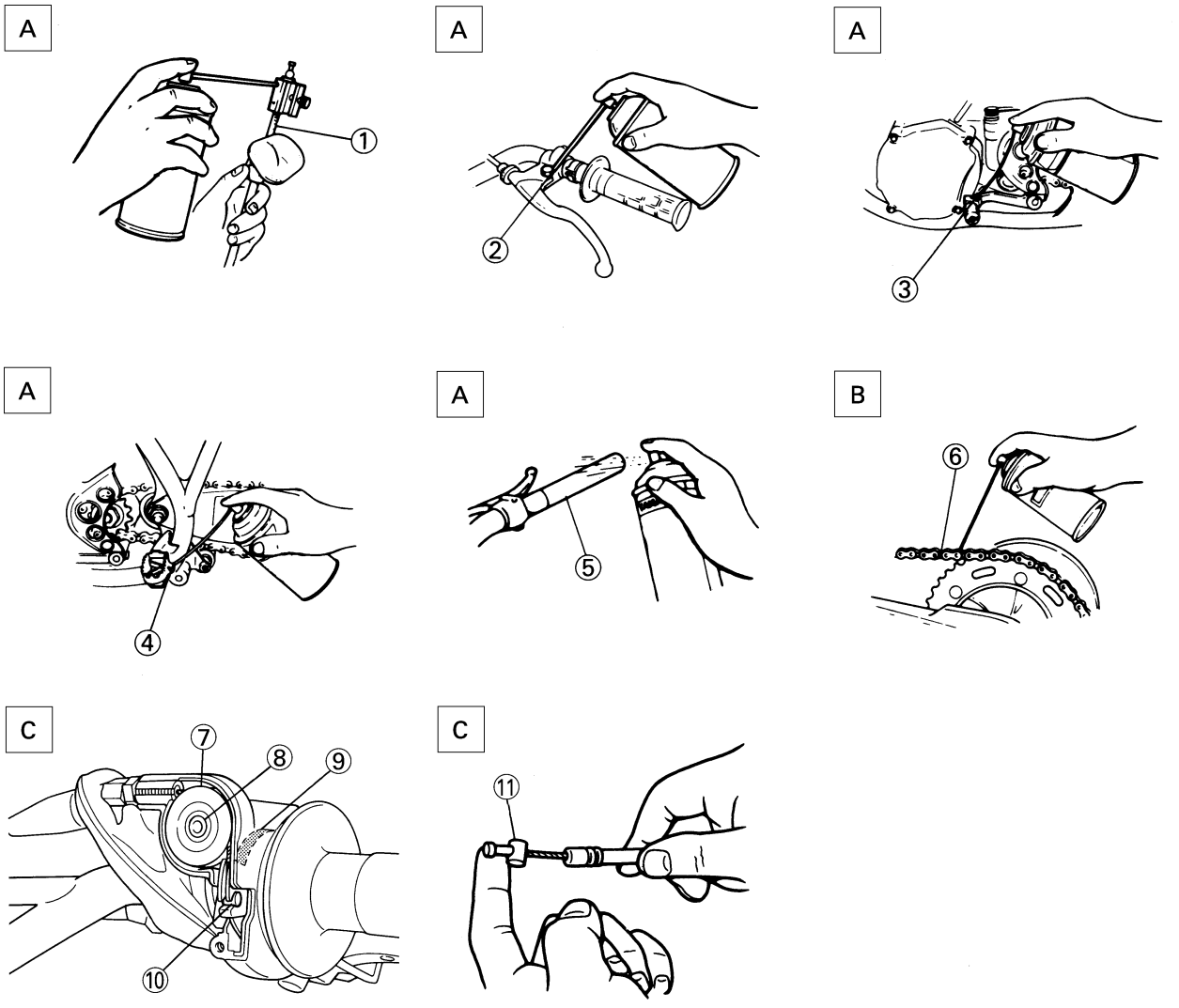

To ensure smooth operation of all components, lubricate your machine during setup, after break-in, and after every race.

1. All control cable
2. Clutch lever pivot
3. Shift pedal pivot
4. Footrest pivot
5. Throttle-to-handlebar contact
6. Drive chain
7. Throttle roller cable guide
8. Throttle roller sliding surface
9. Tube guide cable winding portion
10. Throttle cable end
11. Clutch cable end

A. Use Yamaha cable lube or equivalent on these areas.
B. Use SAE 10W-40 motor oil or suitable chain lubricants.
C. Lubricate the following areas with high quality, lightweight lithium-soap base grease.

⚠ WARNING

Wipe off any excess grease, and avoid getting grease on the brake discs.

ELECTRICAL

CHECKING THE SPARK PLUG

1. Remove:
   • Spark plug
2. Inspect:
   • Electrode "1"
   Wear/damage → Replace.
   • Insulator color "2"
   Normal condition is a medium to light tan color.
   Distinctly different color → Check the engine condition.

TIP

When the engine runs for many hours at low speeds, the spark plug insulator will become sooty, even if the engine and carburetor are in good operating condition.

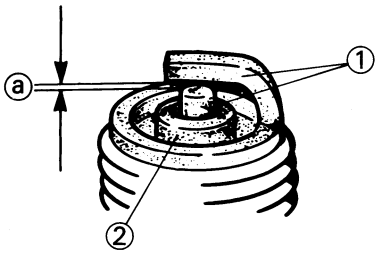

3. Measure:
   • Plug gap "a"
   Use a wire gauge or thickness gauge.
   Out of specification → Regap.

	Spark plug gap: **0.6–0.7 mm (0.024–0.028 in)**

Standard spark plug:
BR9EVX/NGK (resistance type)

4. Clean the plug with a spark plug cleaner if necessary.
5. Tighten:
   • Spark plug

	Spark plug: **20 Nm (2.0 m•kg, 14 ft•lb)**

TIP

- Before installing a spark plug, clean the gasket surface and plug surface.
- Finger-tighten "a" the spark plug before torquing to specification "b".

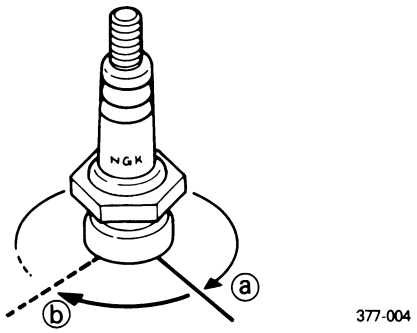

CHECKING THE IGNITION TIMING

1. Remove:
   • Fuel tank
   Refer to "SEAT, FUEL TANK AND SIDE COVERS" section in the CHAPTER 4.
   • Spark plug
   • Crankcase cover (left)
2. Attach:
   • Dial gauge "1"
   • Spark plug hole dial stand "2"

	Dial gauge: **YU-3097/90890-01252** **Spark plug hole dial stand:** **YU-1256**

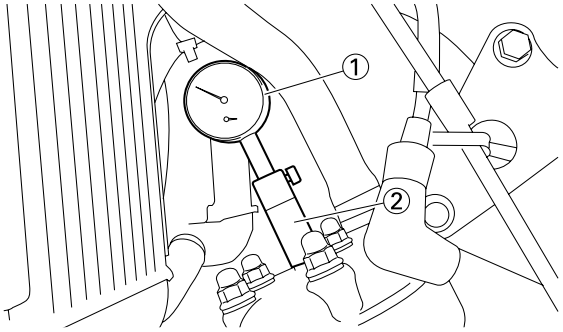

3. Rotate the magneto rotor "1" until the piston reaches top dead center (TDC). When this happens, the needle on the dial gauge will stop and reverse directions even though the rotor is being turned in the same direction.

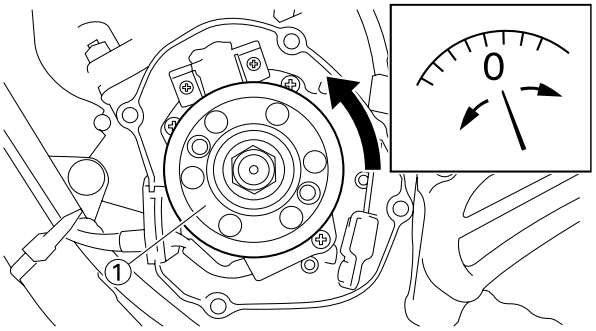

4. Set the dial gauge to zero at TDC.

5. From TDC, rotate the rotor clockwise until the dial gauge indicates that the piston is at a specified distance from TDC.

	Ignition timing (B.T.D.C.): **0.48 mm (0.019 in)**

6. Check:
   • Ignition timing
   Punch mark "a" on rotor should be aligned with punch mark "b" on stator.
   Not aligned → Adjust.

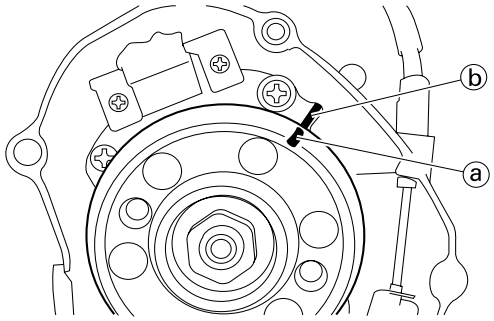

7. Adjust:
   • Ignition timing

▼▼▼▼▼▼▼▼▼▼▼▼▼▼▼▼▼▼▼▼▼▼▼▼▼▼▼▼▼▼▼▼▼

Adjustment steps:

a. Loosen the screws (stator) "1".
b. Align the punch mark on the rotor with punch mark on the stator "2" by moving the stator.
c. Tighten the screws (stator).

	Screw (stator): **7 Nm (0.7 m•kg, 5.1 ft•lb)**

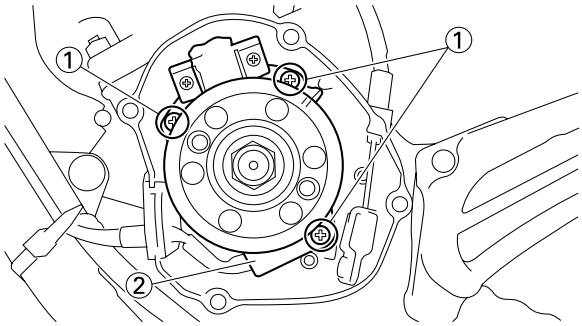

▲▲▲▲▲▲▲▲▲▲▲▲▲▲▲▲▲▲▲▲▲▲▲▲▲▲▲▲▲▲▲▲▲

ENGINE

TIP

This section is intended for those who have basic knowledge and skill concerning the servicing of Yamaha motorcycles (e.g., Yamaha dealers, service engineers, etc.) Those who have little knowledge and skill concerning servicing are requested not to undertake inspection, adjustment, disassembly, or reassembly only by reference to this manual. It may lead to servicing trouble and mechanical damage.

SEAT, FUEL TANK AND SIDE COVERS

REMOVING THE SEAT, FUEL TANK AND SIDE COVERS

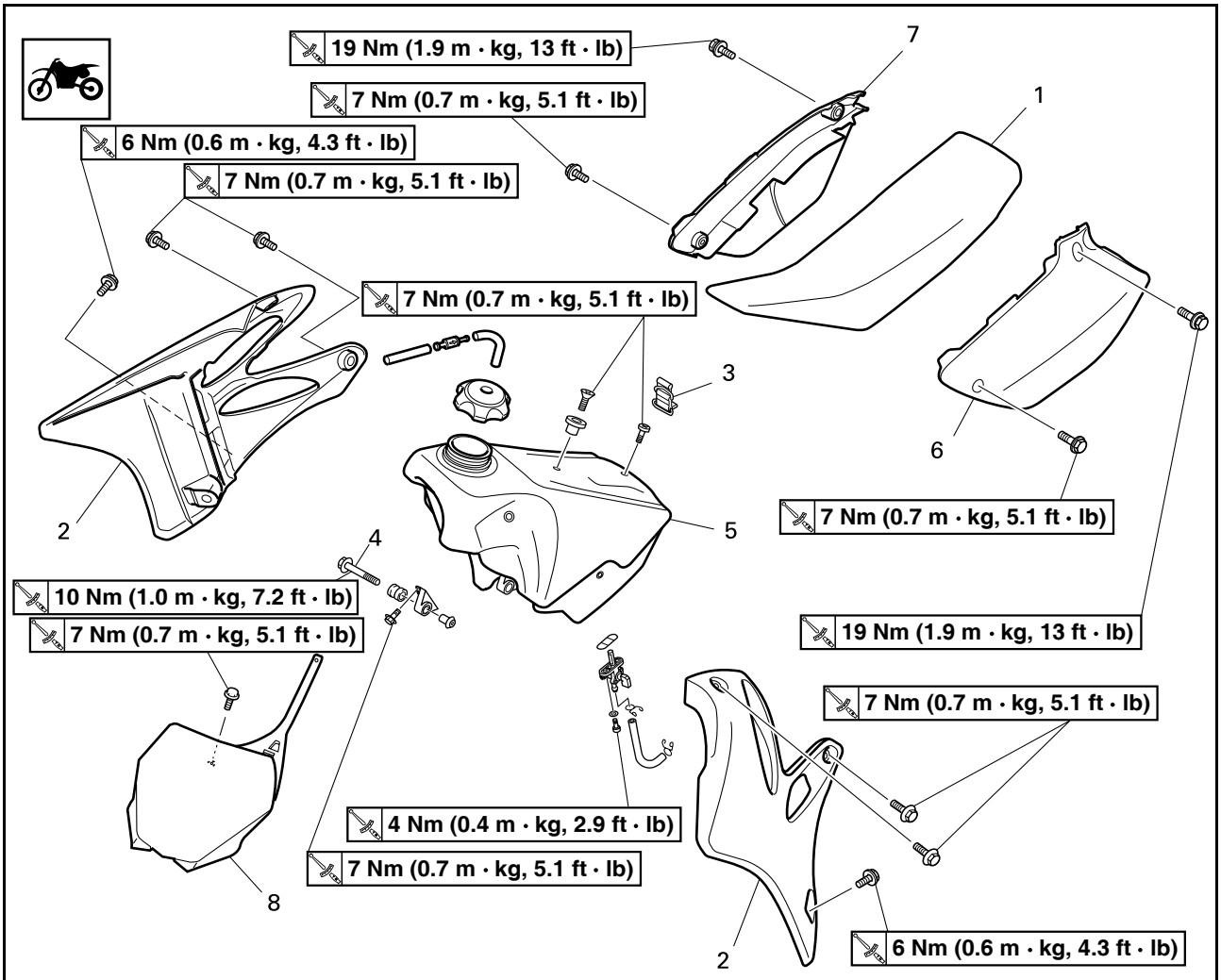

Order	Part name	Q'ty	Remarks
	Turn the fuel cock to "OFF".		
	Disconnect the fuel hose.		
1	Seat	1	
2	Air scoop (left and right)	2	
3	Fitting band	1	Remove on fuel tank side.
4	Bolt (fuel tank)	2	
5	Fuel tank	1	
6	Left side cover	1	Refer to removal section.
7	Right side cover	1	Refer to removal section.
8	Number plate	1	Refer to removal section.

REMOVING THE SIDE COVER

1. Remove:
   - Bolt (side cover)
   - Side cover (left and right) "1"

TIP

Draw the side cover downward to remove it because its claws "a" are inserted in the air filter case.

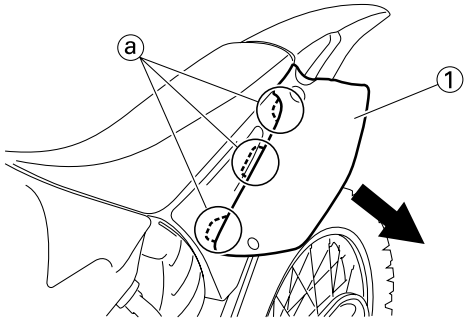

REMOVING THE NUMBER PLATE

1. Remove:
   - Bolt (number plate)
   - Number plate "1"

TIP

- The projection "a" is inserted into the band of the number plate. Pull the band off the projection before removal.
- Remove the clutch cable "2" from the cable guide "b" on the number plate.
- The projection "c" on the lower bracket is inserted into the number plate. Remove the number plate by pulling it off the projection.

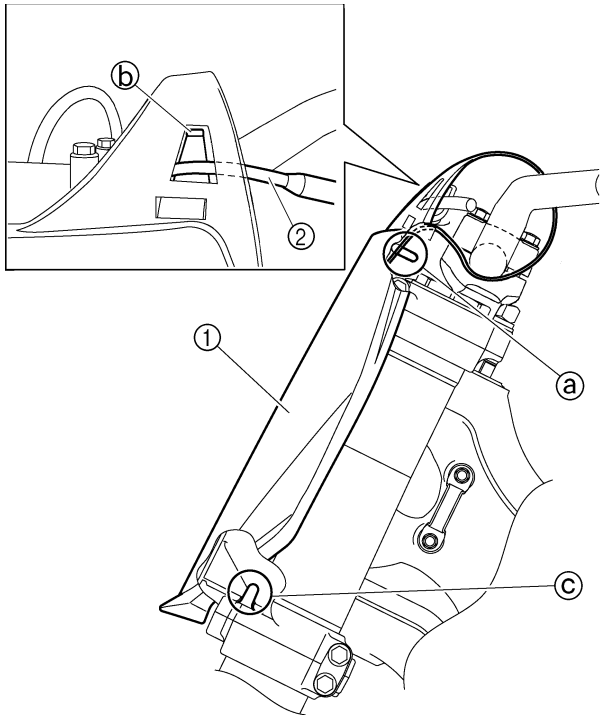

EXHAUST PIPE AND SILENCER

REMOVING THE EXHAUST PIPE AND SILENCER

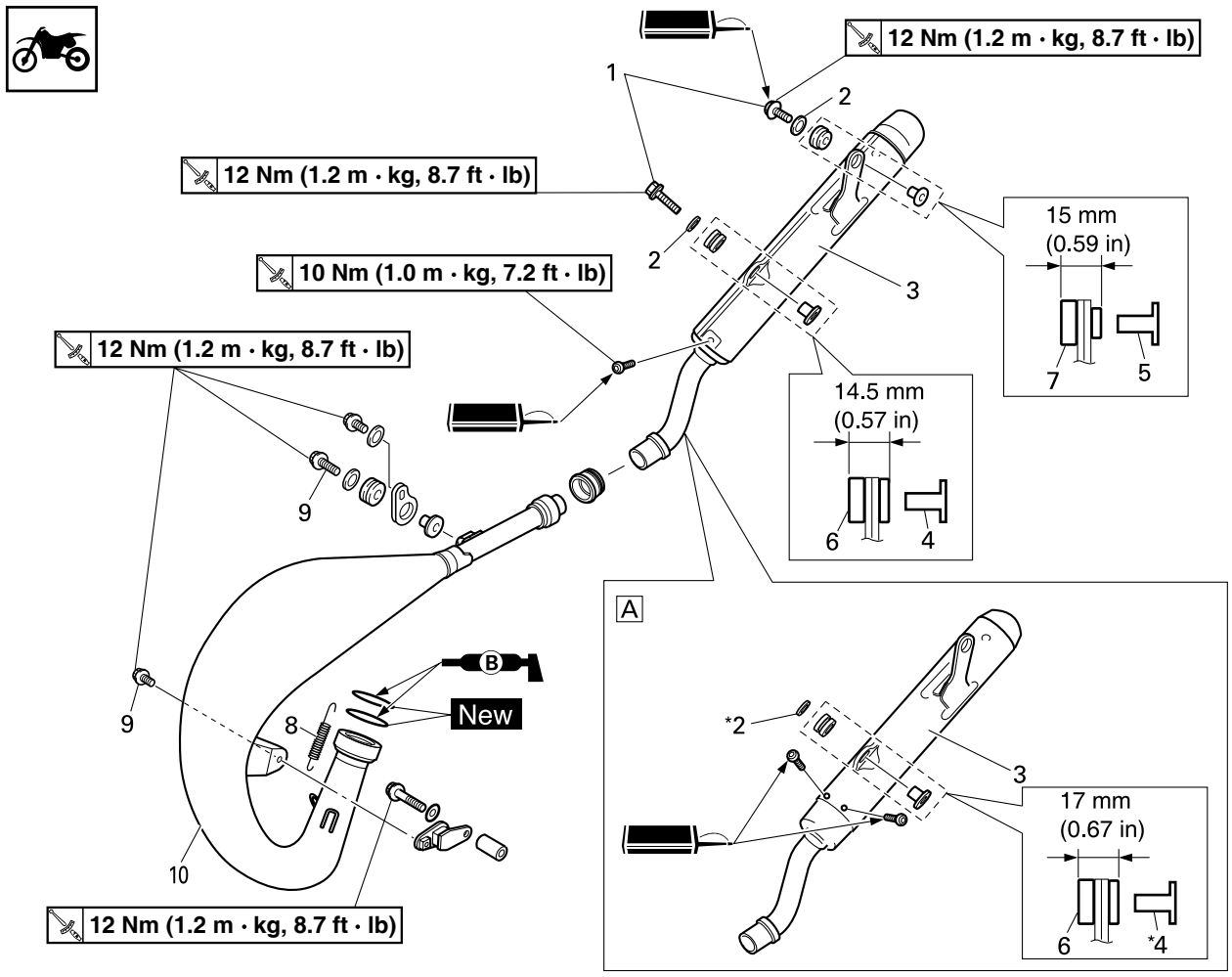

Order	Part name	Q'ty	Remarks
			A. Except for USA and CDN
	Right side cover		Refer to "SEAT, FUEL TANK AND SIDE COVERS" section.
1	Bolt (silencer)	2	
2	Washer [ø=22 mm (0.87 in)]	1	
*2	Washer [ø=26 mm (1.02 in)]	1	
3	Silencer	1	
4	Collar [L=13.0 mm (0.51 in)]	1	
*4	Collar [L=15.5 mm (0.61 in)]	1	
5	Collar [L=13.5 mm (0.53 in)]	1	
6	Grommet (front)	1	
7	Grommet (rear)	1	
8	Tension spring	2	
9	Bolt (exhaust pipe)	2	
10	Exhaust pipe	1	

CHANGING THE SILENCER FIBER

1. Remove:
   - Side cover (right)
   - Bolt (silencer) "1"
   - Silencer "2"
   - Bolt (fiber) "3"

A

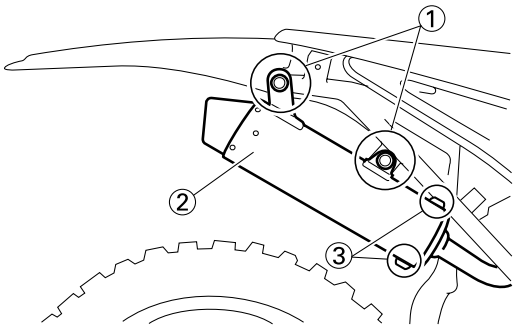

B

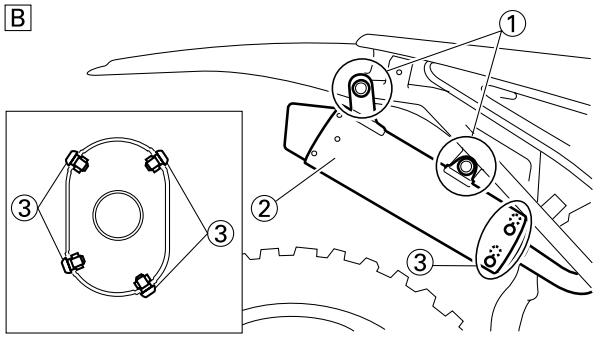

A. For USA and CDN
B. Except for USA and CDN

2. Remove:
   - Inner pipe "1"
3. Replace:
   - Fiber "2"

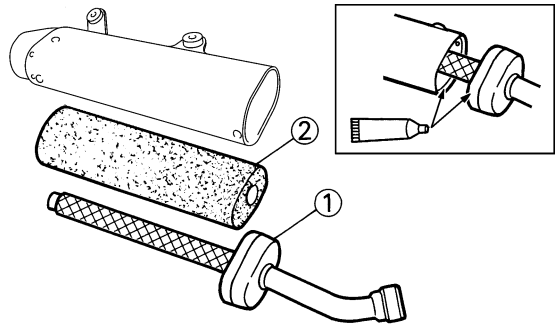

4. Install:
   - Inner pipe

TIP

Fully apply Quick gasket® (Yamaha bond No.1215) or equivalent as shown.

	Yamaha bond No.1215 (Three Bond® No.1215): **90890-85505**

5. Install:
   - Bolt (fiber) "1"

	Bolt (fiber): **10 Nm (1.0 m•kg, 7.2 ft•lb)**

   - Silencer "2"
   - Bolt [silencer (front)] "3"

	Bolt [silencer (front)] : **12 Nm (1.2 m•kg, 8.7 ft•lb)**

   - Bolt [silencer (rear)] "4"

	Bolt [silencer (rear)] : **12 Nm (1.2 m•kg, 8.7 ft•lb)**

   - Side cover (right)

	Side cover (right): **7 Nm (0.7 m•kg, 5.1 ft•lb)**

A

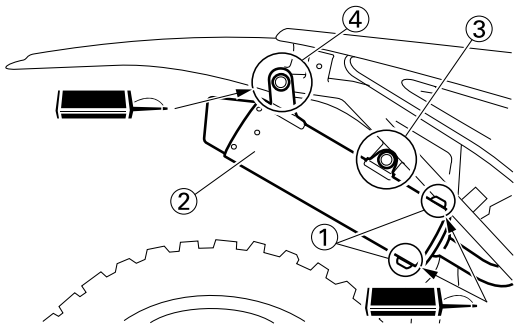

B

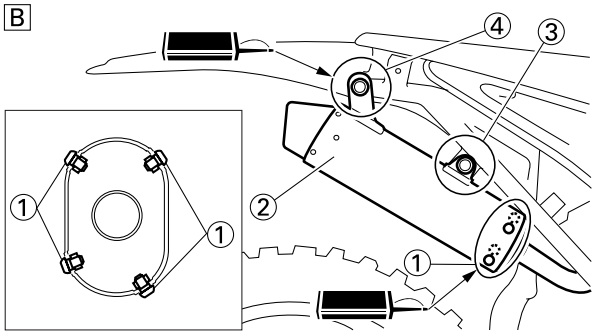

A. For USA and CDN
B. Except for USA and CDN

RADIATOR

REMOVING THE RADIATOR

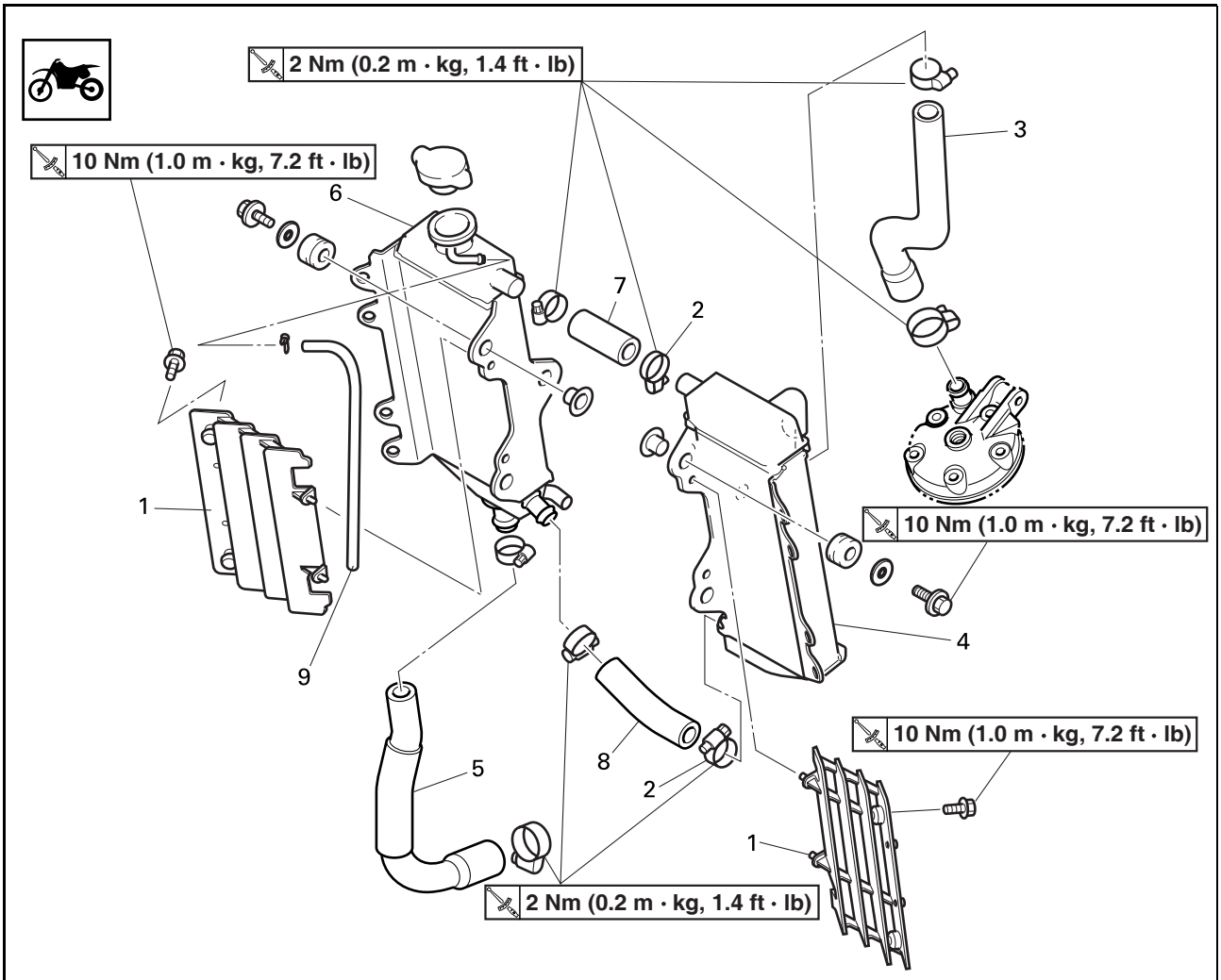

Order	Part name	Q'ty	Remarks
	Drain the coolant.		Refer to "CHANGING THE COOLANT" section in the CHAPTER 3.
	Seat and fuel tank		Refer to "SEAT, FUEL TANK AND SIDE COVERS" section.
1	Radiator guard	2	
2	Radiator hose clamp (radiator hose 1, 3)	2	Only loosening.
3	Radiator hose 2	1	
4	Left radiator	1	
5	Radiator hose 4	1	
6	Right radiator	1	
7	Radiator hose 1	1	
8	Radiator hose 3	1	
9	Radiator breather hose	1	

HANDLING NOTE

⚠ WARNING

Do not remove the radiator cap when the engine and radiator are hot. Scalding hot fluid and steam may be blown out under pressure, which could cause serious injury. When the engine has cooled, open the radiator cap by the following procedure: Place a thick rag, like a towel, over the radiator cap, slowly rotate the cap counterclockwise to the detent. This procedure allows any residual pressure to escape. When the hissing sound has stopped, press down on the cap while turning counterclockwise and remove it.

CHECKING THE RADIATOR

1. Inspect:
   - Radiator core "1"
     Obstruction → Blow out with compressed air through rear of the radiator.
     Bent fin → Repair/replace.

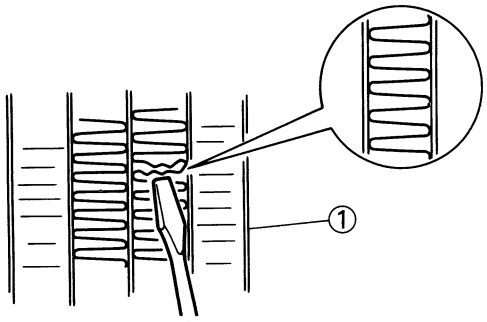

INSTALLING THE RADIATOR

1. Install:
   - Radiator breather hose "1"
   - Radiator hose 3 "2"

	Radiator hose 3: 2 Nm (0.2 m•kg, 1.4 ft•lb)

   - Radiator hose 1 "3"

	Radiator hose 1: 2 Nm (0.2 m•kg, 1.4 ft•lb)

     To right radiator "4".

TIP

Clamp the radiator hose in the direction as shown.

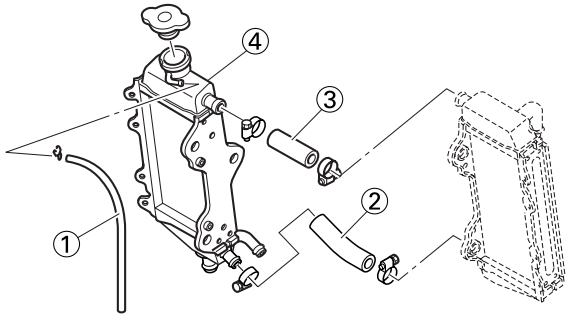

2. Install:
   - Right radiator "1"
   - Washer "2"
   - Bolt (right radiator) "3"

	Bolt (right radiator): 10 Nm (1.0 m•kg, 7.2 ft•lb)

   - Radiator hose 4 "4"

	Radiator hose 4: 2 Nm (0.2 m•kg, 1.4 ft•lb)

     Refer to "CABLE ROUTING DIAGRAM" section in the CHAPTER 2.

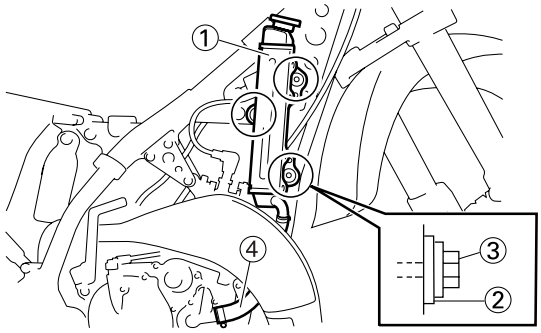

3. Install:
   - Left radiator "1"
   - Washer "2"
   - Bolt (left radiator) "3"

	Bolt (left radiator): 10 Nm (1.0 m•kg, 7.2 ft•lb)

   - Radiator hose 2 "4"

	Radiator hose 2: 2 Nm (0.2 m•kg, 1.4 ft•lb)

     Refer to "CABLE ROUTING DIAGRAM" section in the CHAPTER 2.

4. Tighten:
   • Radiator hose clamp 1, 3 "5"

	Radiator hose clamp 1, 3: 2 Nm (0.2 m•kg, 1.4 ft•lb)

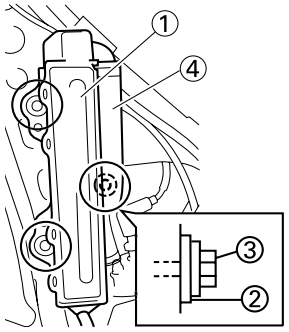

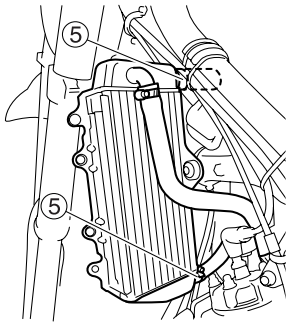

5. Install:
   • Radiator guard "1"
   • Bolt (radiator guard) "2"

	Bolt (radiator guard): 10 Nm (1.0 m•kg, 7.2 ft•lb)

TIP
Fit the hook "a" on the inner side first into the radiator.

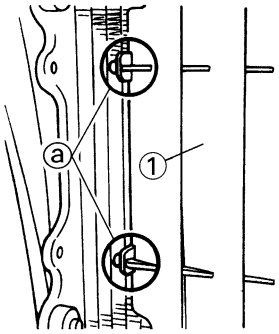

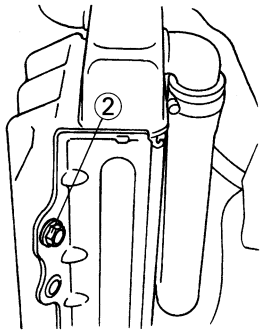

CARBURETOR AND REED VALVE

REMOVING THE CARBURETOR AND REED VALVE

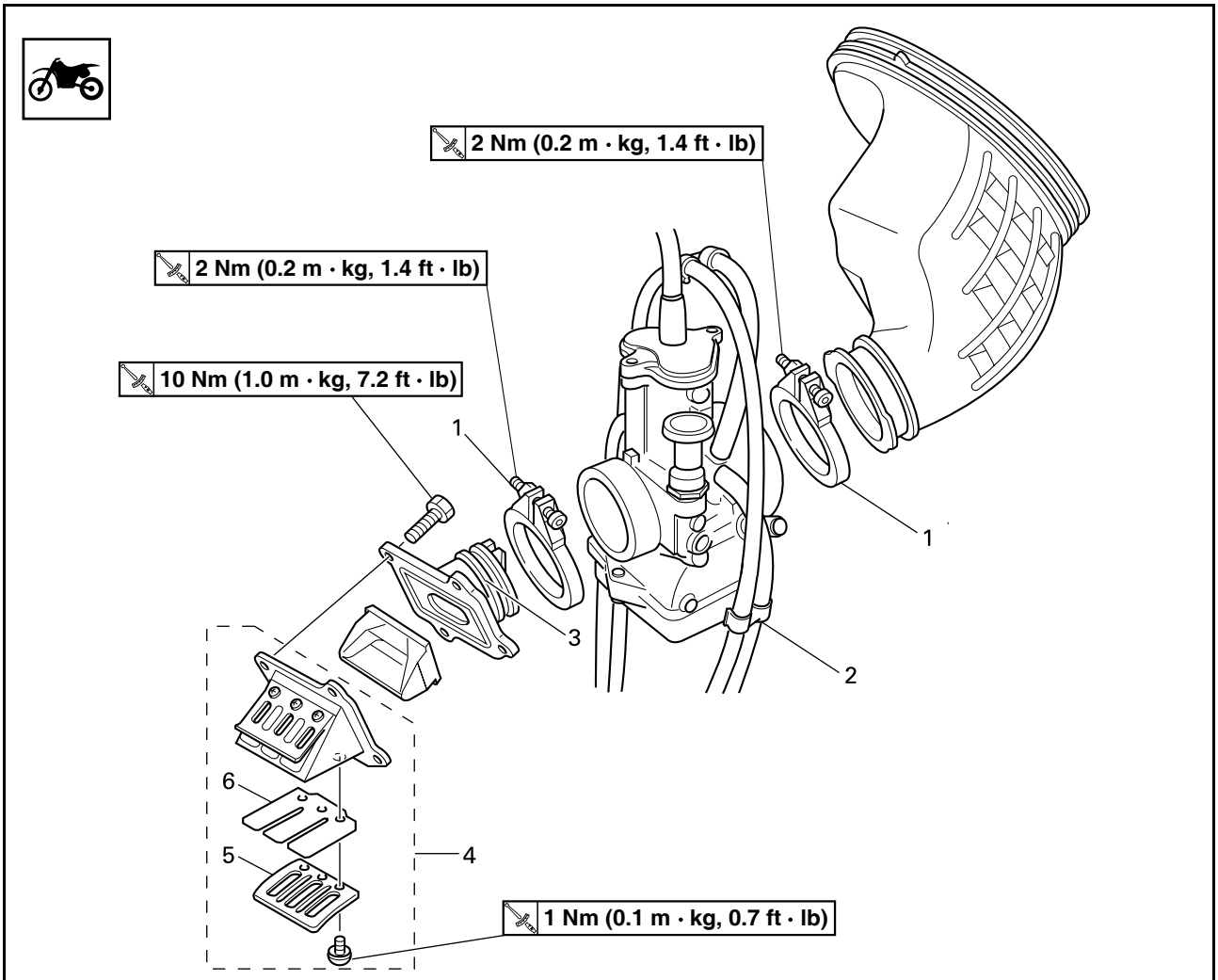

Order	Part name	Q'ty	Remarks
	Fuel tank		Refer to "SEAT, FUEL TANK AND SIDE COVERS" section.
1	Clamp (carburetor joint)	2	Loosen the screw (carburetor joint).
2	Carburetor	1	
3	Carburetor joint	1	
4	Reed valve assembly	1	
5	Stopper (reed valve)	2	
6	Reed valve	2	

DISASSEMBLING THE CARBURETOR

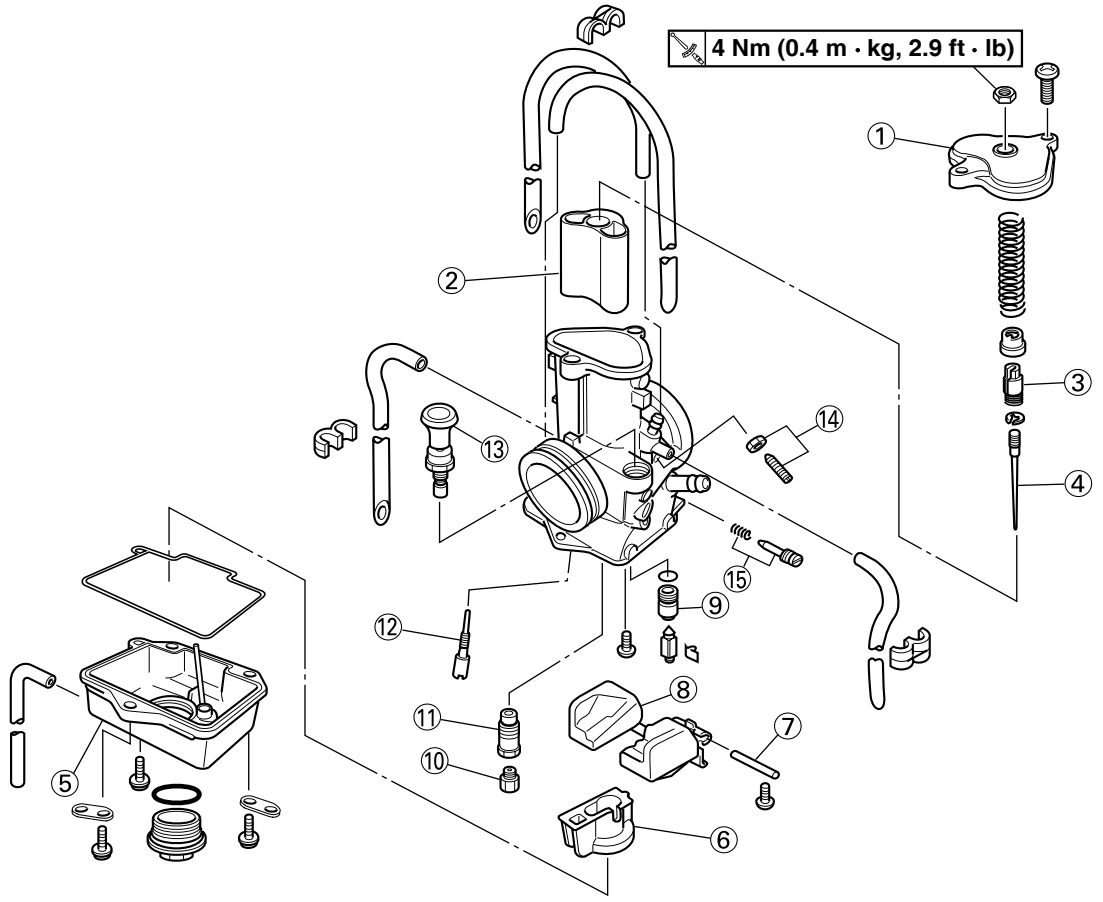

Order	Part name	Q'ty	Remarks
1	Mixing chamber top	1	Refer to removal section.
2	Throttle valve	1	
3	Needle holder	1	
4	Jet needle	1	
5	Float chamber	1	
6	Needle jet cover	1	
7	Float pin	1	
8	Float	1	
9	Valve seat	1	
10	Main jet	1	
11	Main jet holder	1	
12	Pilot jet	1	
13	Starter plunger	1	
14	Throttle stop screw	1	
15	Pilot air screw	1	

HANDLING NOTE

NOTICE

Do not disassemble the venturi block "1" and main nozzle "2" because it will cause a drop in carburetor performance.

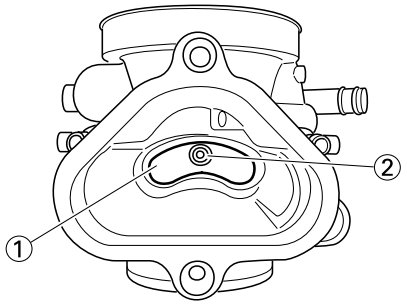

REMOVING THE THROTTLE VALVE

1. Remove:
   - Throttle valve "1"
   - Ring "2"
   - Spring (throttle valve) "3"
   - Mixing chamber top "4"
   - Throttle cable "5"

TIP

While compressing the spring (throttle valve), disconnect the throttle cable.

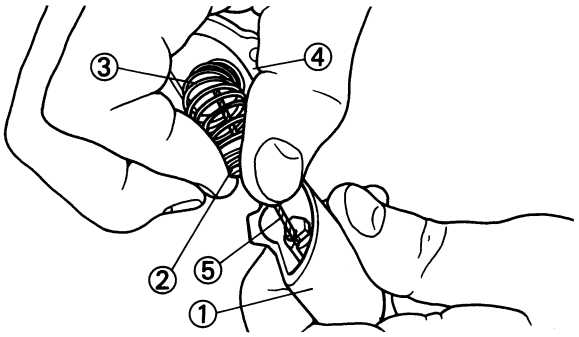

CHECKING THE CARBURETOR

1. Inspect:
   - Carburetor body
     Contamination → Clean.

NOTICE

When cleaning the main air passage "a", do not blow air at the filter side because it will clog the passage with mud or sand.

TIP

- Use a petroleum based solvent for cleaning. Blow out all passages and jets with compressed air.
- Never use a wire.
- When cleaning the main air passage, blow air through it while covering the nozzle with a clean rag.

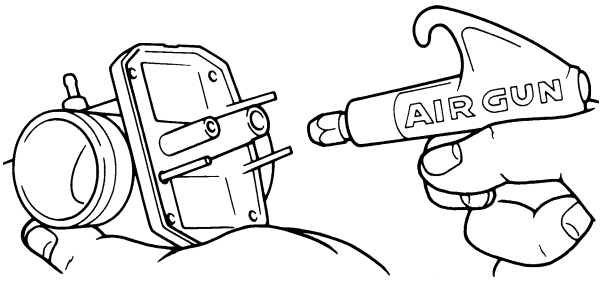

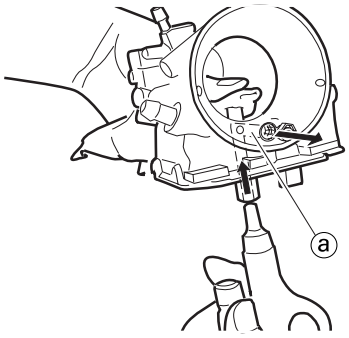

2. Inspect:
   - Main jet "1"
   - Main jet holder "2"
   - Pilot jet "3"
     Contamination → Clean.

TIP

- Use a petroleum based solvent for cleaning. Blow out all passages and jets with compressed air.
- Never use a wire.

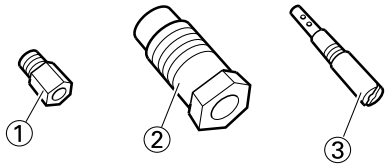

CHECKING THE NEEDLE VALVE

1. Inspect:
   - Needle valve "1"
   - Valve seat "2"
     Grooved wear "a" → Replace.
     Dust "b" → Clean.

TIP
Always replace the needle valve and valve seat as a set.

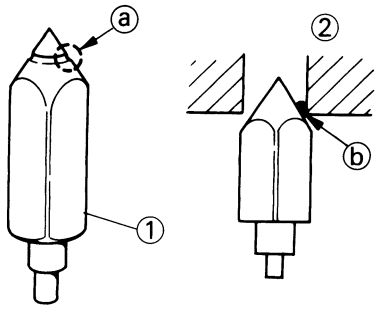

CHECKING THE THROTTLE VALVE

1. Check:
   - Free movement
     Stick → Repair or replace.

TIP
Insert the throttle valve "1" into the carburetor body, and check for free movement.

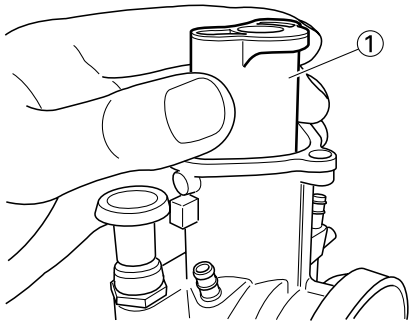

CHECKING THE JET NEEDLE

1. Inspect:
   - Jet needle "1"
     Bends/wear → Replace.
   - Clip groove
     Free play exists/wear → Replace.
   - Clip position

	Standard clip position: **No.3 Groove**

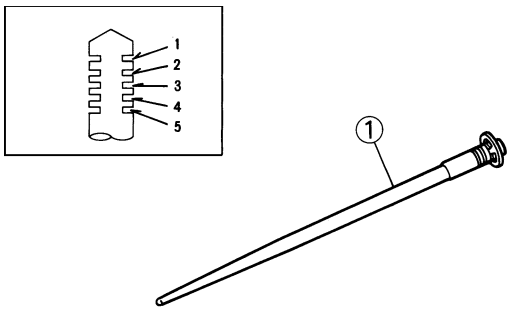

CHECKING THE FILTER

1. Inspect:
   - Filter "1"
     Damage → Replace.

TIP
Inspect the filter as it is assembled to the carburetor. Do not remove the filter except when replacing it.

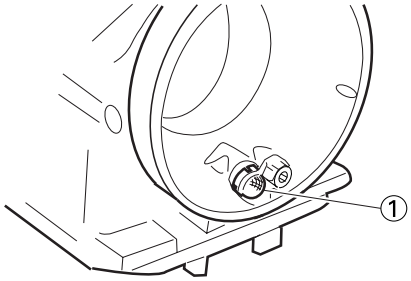

MEASURING AND ADJUSTING THE FUEL LEVEL

1. Measure:
   - Fuel level "a"
     Out of specification → Adjust.

	Fuel level: **9.5–10.5 mm (0.37–0.41 in)** **Above the float chamber mating surface**

▼▼▼▼▼▼▼▼▼▼▼▼▼▼▼▼▼▼▼▼▼▼▼▼▼▼▼▼▼▼▼▼▼▼

Fuel level Measurement and adjustment steps:

a. Remove the drain plug.
b. Connect the fuel level gauge adapter "2" and fuel level gauge "1" to the float chamber.

	Fuel level gauge adapter: **YM-01470/90890-01470** **Fuel level gauge:** **YM-1312-A/90890-01312**

c. Hold the fuel level gauge vertically next to the float chamber mating surface.
d. Measure the fuel level with the fuel level gauge.

TIP

Keep the carburetor and fuel level gauge vertically when measuring the fuel level.

e. If the fuel level is not within specification, inspect the valve seat and needle valve.
f. If either is worn, replace them both.
g. If both are fine, adjust the fuel level by bending the float tab "b" on the float.
h. Recheck the fuel level.

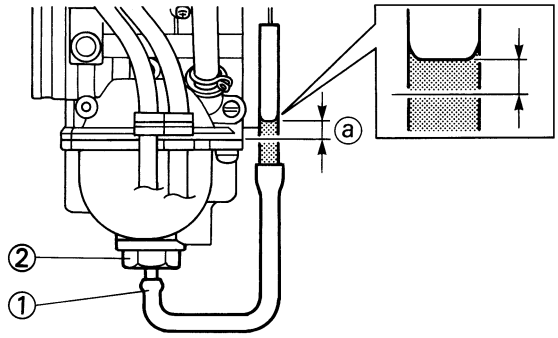

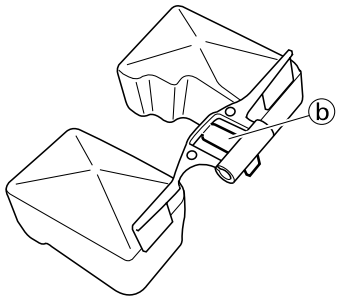

▲▲▲▲▲▲▲▲▲▲▲▲▲▲▲▲▲▲▲▲▲▲▲▲▲▲▲▲▲▲

CHECKING THE FLOAT

1. Inspect:
   • Float "1"
   Damage → Replace.

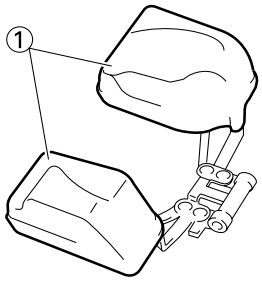

CHECKING THE REED VALVE

1. Measure:
   • Reed valve bending "a"
   Out of specification → Replace.

	Reed valve bending limit: **0.2 mm (0.008 in)**

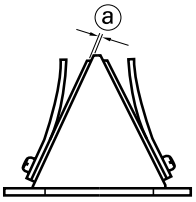

2. Measure:
   • Valve stopper height "a"
   Out of specification → Adjust stopper/Replace valve stopper.

	Valve stopper height: **8.2–8.6 mm (0.323–0.339 in)**

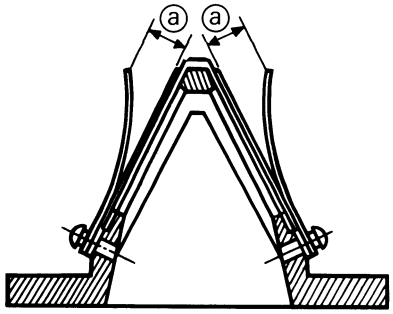

INSTALLING THE REED VALVE

1. Install:
   • Reed valve "1"
   • Stopper (reed valve) "2"
   • Screw (reed valve) "3"

	Screw (reed valve): **1 Nm (0.1 m•kg, 0.7 ft•lb)**

TIP

- Install the reed valve with the reed valve bending as shown.
- Note the cut "a" in the lower corner of the reed and stopper plate.

NOTICE

Tighten each screw gradually to avoid warping.

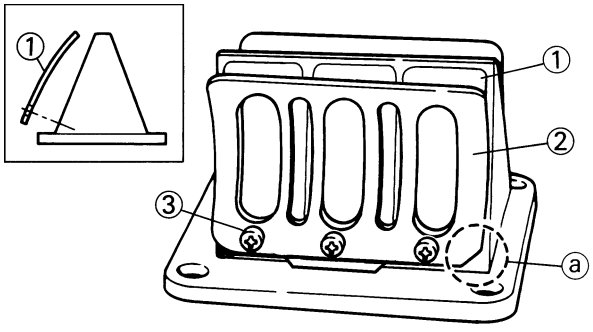

2. Install:
   • Reed valve assembly "1"
   • Reed valve spacer "2"

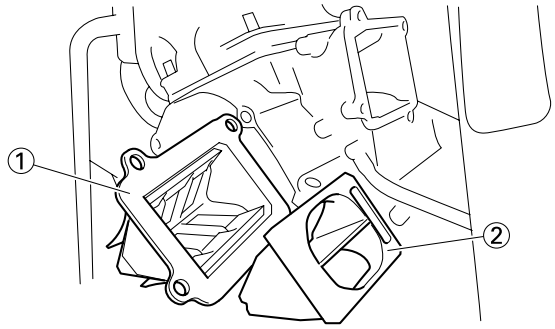

3. Install:
   • Carburetor joint "1"
   • Bolt (carburetor joint) "2"

	Bolt (carburetor joint): 10 Nm (1.0 m•kg, 7.2 ft•lb)

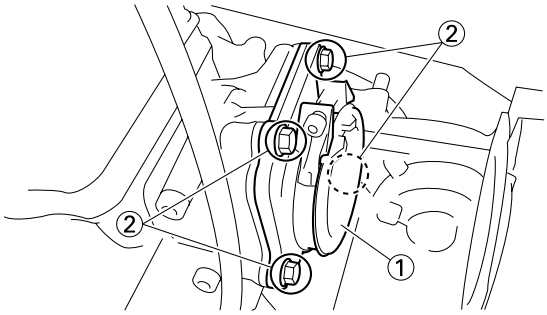

ASSEMBLING THE CARBURETOR

1. Install:
   • Throttle stop screw "1"
   • Locknut "2"
   • Pilot air screw "3"

▼▼▼▼▼▼▼▼▼▼▼▼▼▼▼▼▼▼▼▼▼▼▼▼▼▼▼▼▼▼▼▼

Note the following installation points:

a. Screw in the pilot air screw until it is lightly seated.
b. Back out it by the specified number of turns.

	Pilot air screw: 2-1/4 turns out

▲▲▲▲▲▲▲▲▲▲▲▲▲▲▲▲▲▲▲▲▲▲▲▲▲▲▲▲▲▲▲▲

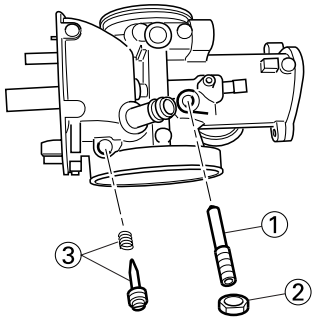

2. Install:
   • Starter plunger "1"

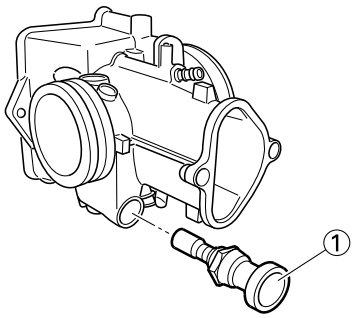

3. Install:
   • Main jet holder "1"
   • Main jet "2"
   • Pilot jet "3"
   • Valve seat "4"
   • Screw (valve seat) "5"

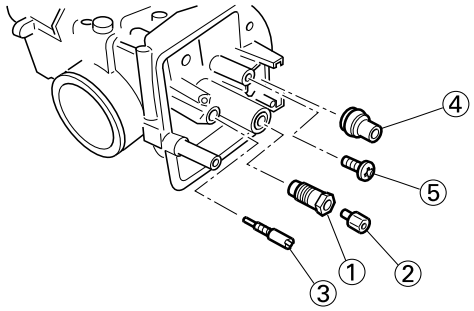

4. Install:
   • Needle valve "1"
   • Float "2"
   • Float pin "3"
   • Screw (float pin) "4"
   • Needle jet cover "5"

TIP

- After installing the needle valve to the float, install them to the carburetor.
- Check the float for smooth movement.

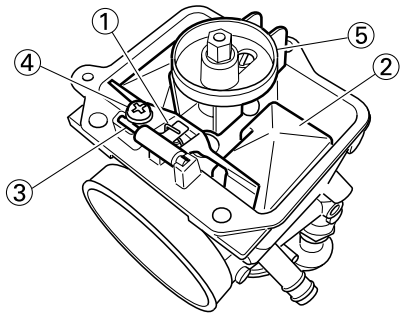

5. Install:
   • Float chamber "1"
   • Plate "2"
   • Screw (float chamber) "3"

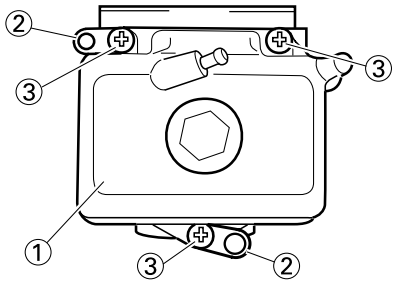

6. Install:
   • Jet needle "1"
   • Needle holder "2"
   To throttle valve 3.

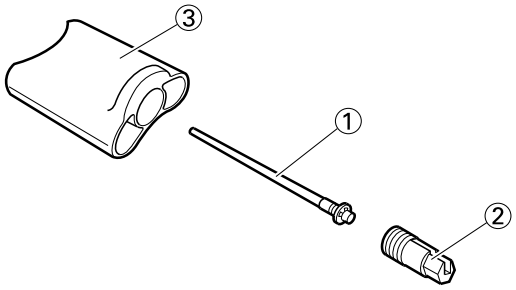

7. Install:
   • Throttle cable "1"
   • Locknut "2"

	Locknut: **4 Nm (0.4 m•kg, 2.9 ft•lb)**

   • Mixing chamber top "3"
   • Spring (throttle valve) "4"
   • Ring "5"
   • Throttle valve "6"

TIP
- While compressing the spring, connect the throttle cable.
- Align the projection "a" on the ring with the groove "b" in the needle holder "7".

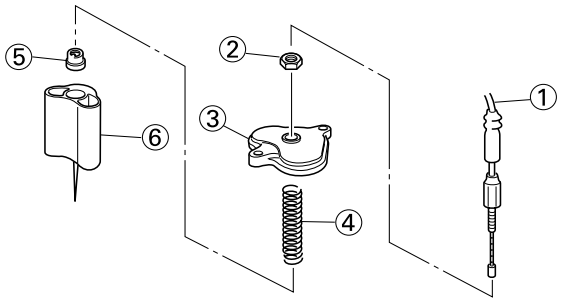

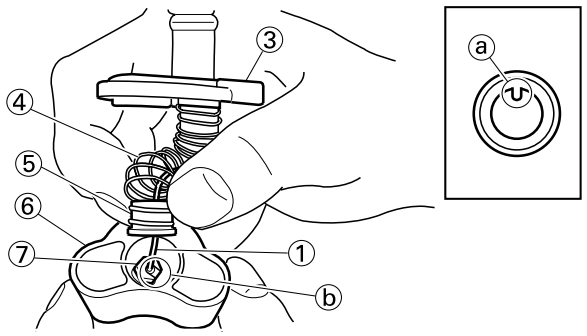

8. Install:
   • Mixing chamber top "1"
   • Screw (mixing chamber top) "2"
   To carburetor "3".

TIP
After installing, check the throttle grip for smooth movement.

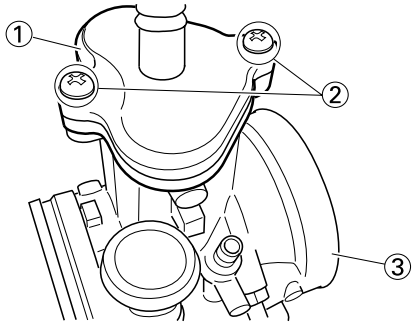

9. Install:
   • Air vent hose "1"
   • Overflow hose "2"
   • Clamp "3"

TIP
Pass the air vent hose at the rear (on the air cleaner side) of the throttle cable "4".

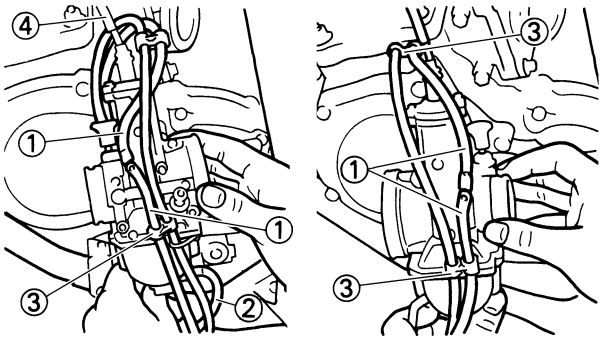

INSTALLING THE CARBURETOR

1. Install:
   • Carburetor "1"

TIP

Install the projection between the carburetor joint slots.

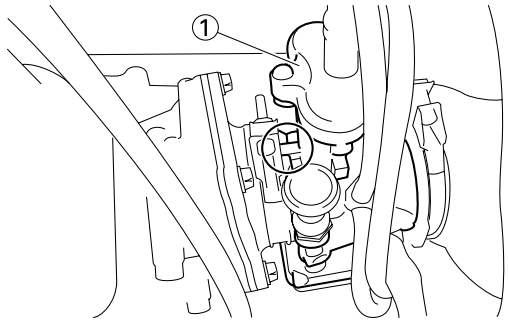

2. Tighten:
   • Bolt (air filter joint) "1"

	Bolt (air filter joint): 2 Nm (0.2 m•kg, 1.4 ft•lb)

   • Bolt (carburetor joint) "2"

	Bolt (carburetor joint): 2 Nm (0.2 m•kg, 1.4 ft•lb)

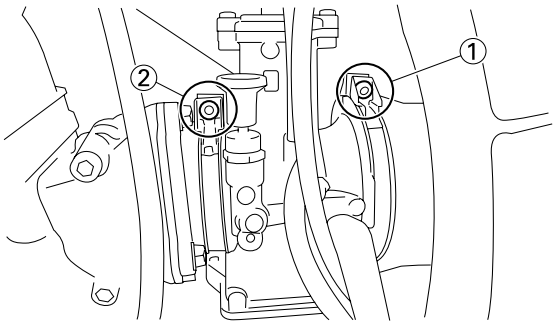

3. Clamp:
   • Air vent hose "1"
   • Overflow hose "2"
   Refer to "CABLE ROUTING DIAGRAM" section in the CHAPTER 2.

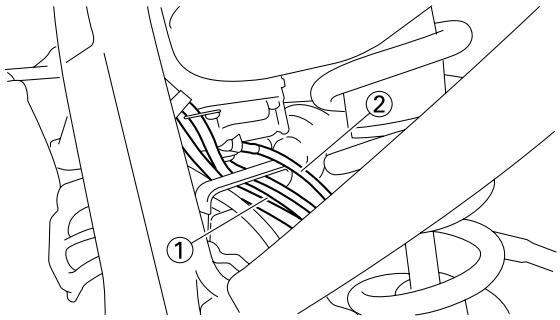

4. Adjust:
   • Idle speed
   Refer to "ADJUSTING THE ENGINE IDLING SPEED" section in the CHAPTER 3.

CYLINDER HEAD, CYLINDER AND PISTON

REMOVING THE CYLINDER HEAD AND CYLINDER

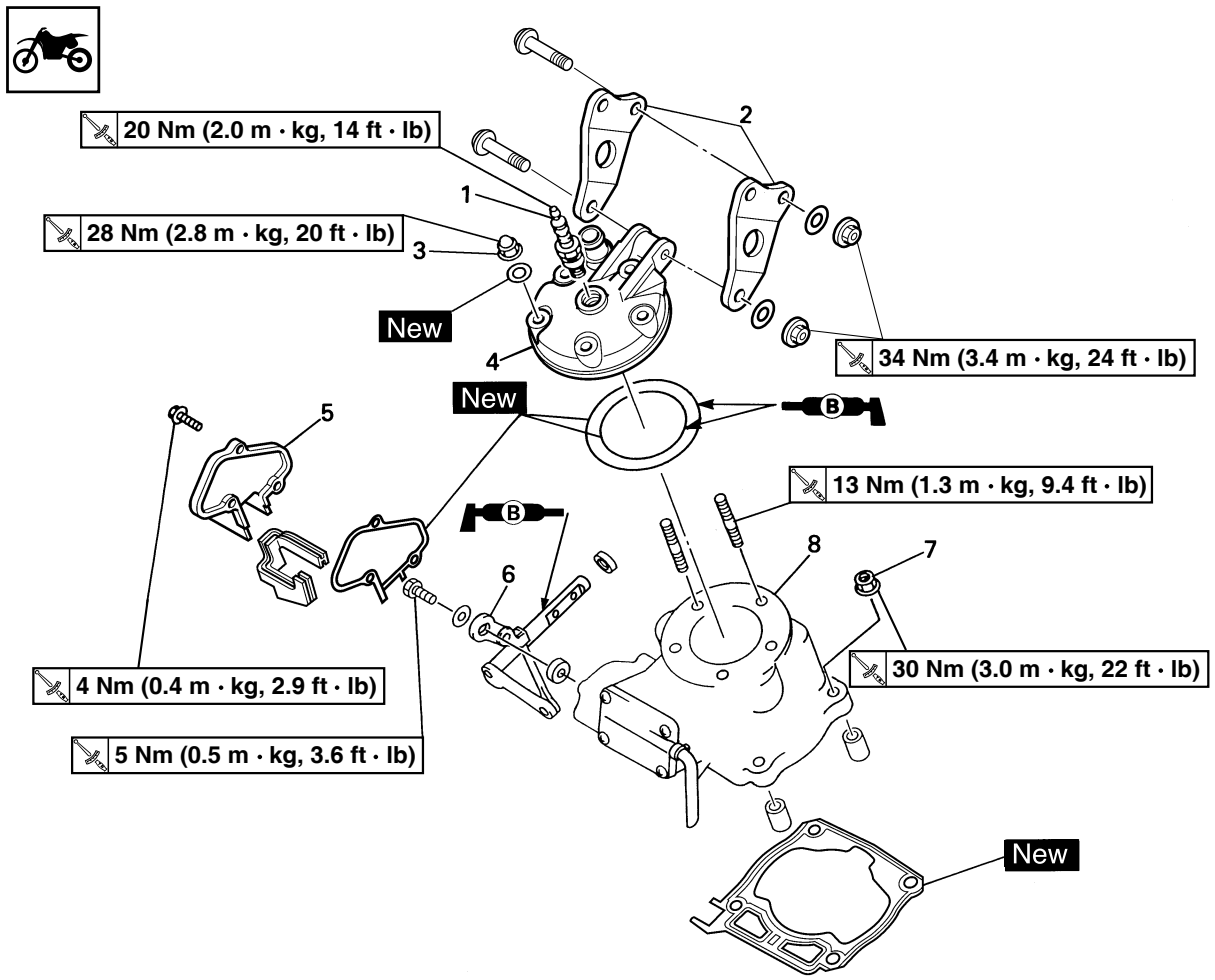

Order	Part name	Q'ty	Remarks
	Seat and fuel tank		Refer to "SEAT, FUEL TANK AND SIDE COVERS" section.
	Exhaust pipe and silencer		Refer to "EXHAUST PIPE AND SILENCER" section.
	Radiator		Refer to "RADIATOR" section.
1	Spark plug	1	
2	Engine bracket	2	
3	Nut (cylinder head)	5	Loosen each nut 1/4 turn, and remove them after all nuts are loosened.
4	Cylinder head	1	
5	Power valve housing	1	
6	Push rod	1	Refer to removal section.
7	Nut (cylinder)	4	
8	Cylinder	1	

REMOVING THE PISTON AND POWER VALVE

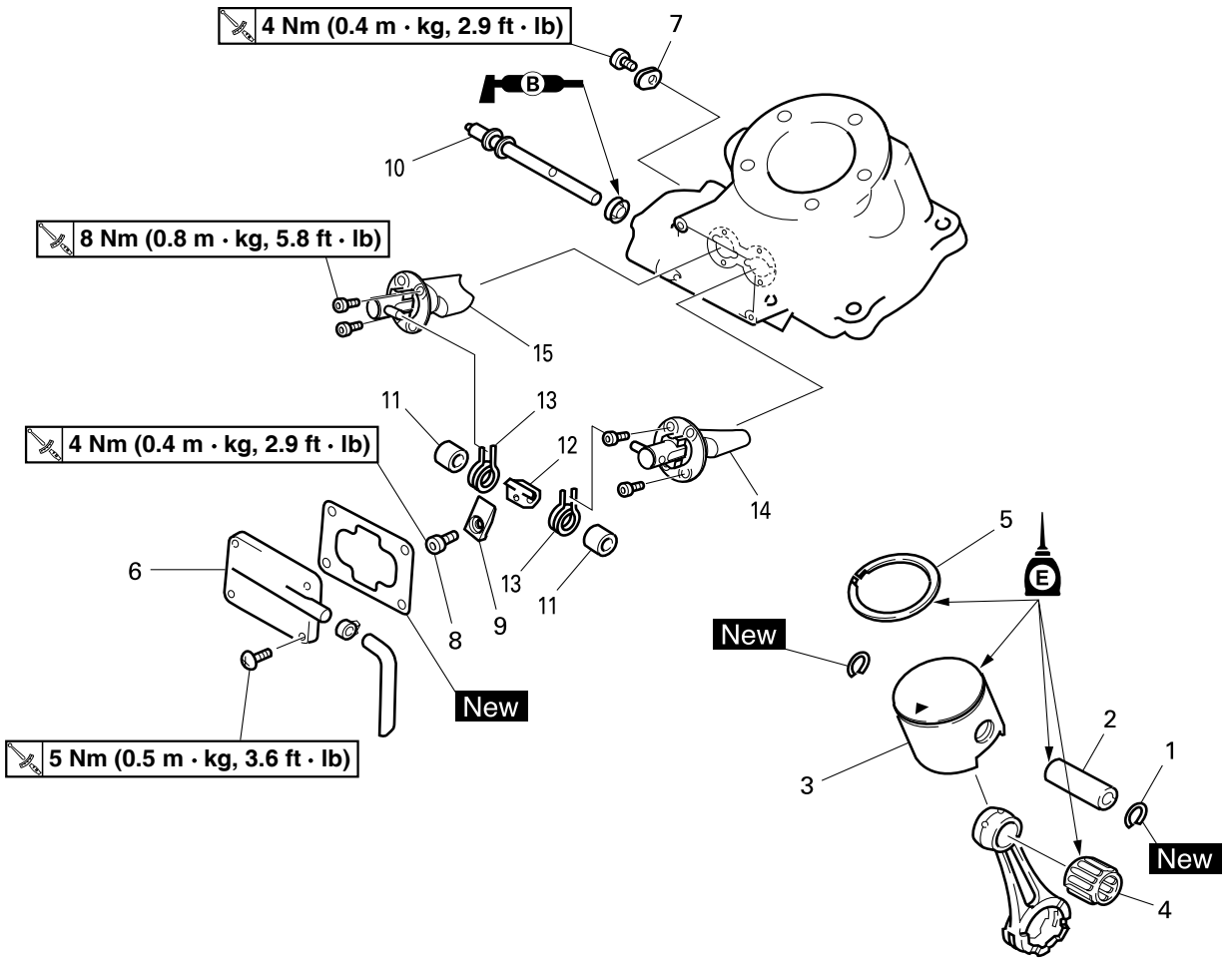

Order	Part name	Q'ty	Remarks
1	Piston pin clip	2	Refer to removal section.
2	Piston pin	1	Refer to removal section.
3	Piston	1	Refer to removal section.
4	Small end bearing	1	Refer to removal section.
5	Piston ring	1	Refer to removal section.
6	Power valve cover	1	
7	Thrust plate	1	
8	Bolt (link lever)	1	
9	Valve holder	1	
10	Valve shaft	1	
11	Collar	2	
12	Link lever	1	
13	Spring	2	
14	Power valve 1	1	
15	Power valve 2	1	

REMOVING THE PUSH ROD

1. Remove:
   • Bolt (push rod) "1"
   • Push rod "2"

TIP
Set the collar "3" included in owner's tool kit to remove the bolt (push rod).

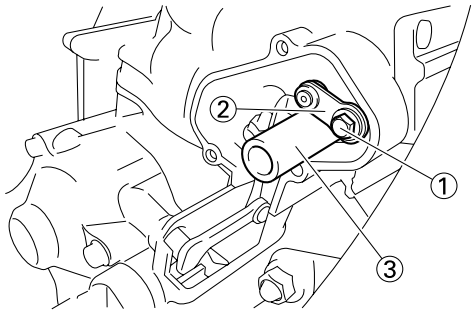

REMOVING THE PISTON AND PISTON RING

1. Remove:
   • Piston pin clip "1"

TIP
Before removing the piston pin clip, cover the crankcase with a clean rag to prevent the piston pin clip from falling into the crankcase cavity.

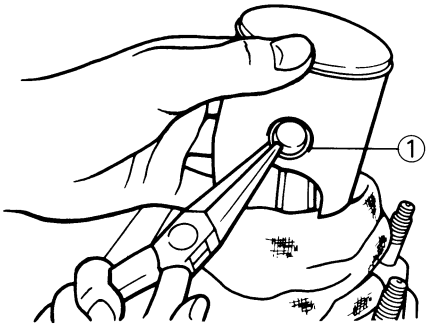

2. Remove:
   • Piston pin "1"
   • Piston "2"
   • Small end bearing "3"

TIP
Before removing each piston pin, deburr the clip groove and pin hole area. If the piston pin groove is deburred and the piston pin is still difficult to remove, use the piston pin puller set "4".

	**Piston pin puller set:** **YU-1304/90890-01304**

NOTICE
Do not use a hammer to drive the piston pin out.

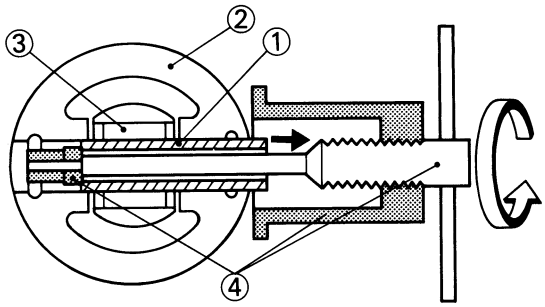

3. Remove:
   • Piston ring "1"

TIP
Take care not to scratch the piston or damage the piston ring by expanding it more than necessary.

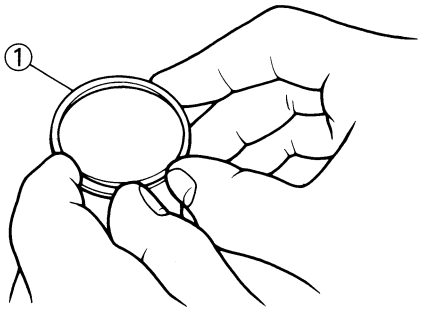

CHECKING THE CYLINDER HEAD

1. Eliminate:
   • Carbon deposits
     Use a rounded scraper.

TIP
Take care to avoid damaging the spark plug threads. Do not use a sharp instrument. Avoid scratching the aluminum.

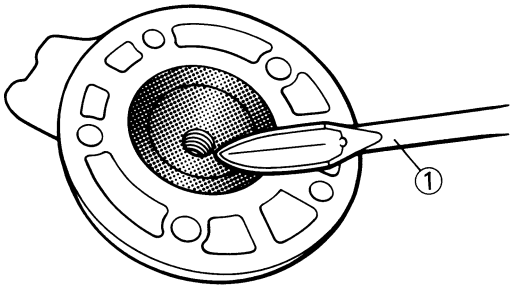

2. Inspect:
   • Cylinder head water jacket
     Crust of minerals/Rust → Replace.

3. Measure:
   • Cylinder head warpage
   Out of specification → Resurface.

	Cylinder head warpage: Less than 0.03 mm (0.0012 in)

▼▼▼▼▼▼▼▼▼▼▼▼▼▼▼▼▼▼▼▼▼▼▼▼▼▼▼▼▼▼

Warpage measurement and resurfacing steps:

a. Attach a straightedge "1" and a thickness gauge "2" on the cylinder head.
b. Measure the warpage.
c. If the warpage is out of specification, resurface the cylinder head.
d. Place a 400–600 grit wet sandpaper "3" on the surface plate, and resurface the head "4" using a figure-eight sanding pattern.

TIP

To ensure an even surface rotate the cylinder head several times.

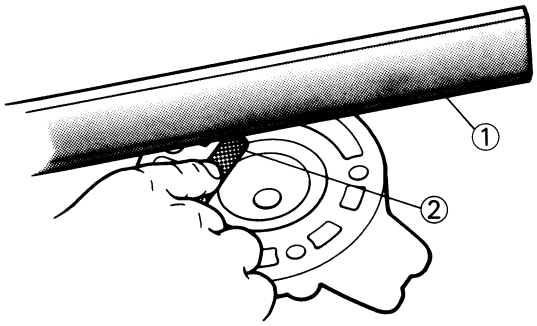

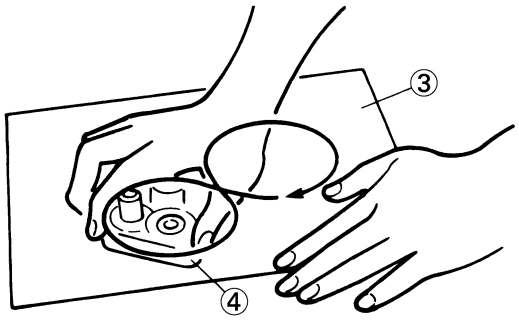

▲▲▲▲▲▲▲▲▲▲▲▲▲▲▲▲▲▲▲▲▲▲▲▲▲▲▲▲▲▲

CHECKING THE CYLINDER

1. Eliminate:
   • Carbon deposits
   Use a rounded scraper "1".

TIP

Do not use a sharp instrument. Avoid scratching the aluminum.

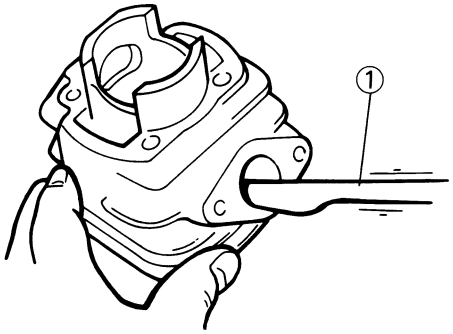

2. Inspect:
   • Cylinder inner surface
   Score marks → Repair or replace.
   Use #400–600 grit wet sandpaper.

NOTICE

Do not rebore the cylinder.

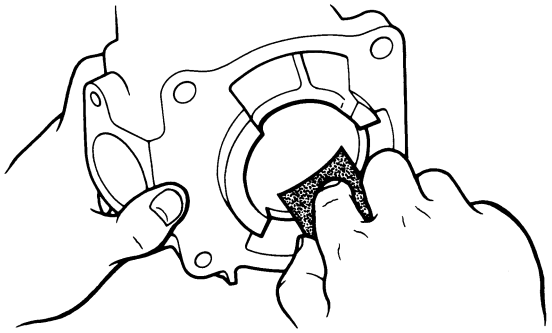

3. Measure:
   • Cylinder bore "C"
   Use cylinder gauge "1".
   Out of limit → Replace.

TIP

Measure the cylinder bore "C" in parallel (A, B, C) to and at right angles to the crankshaft (a, b). Then, find the average of the measurements.

	Standard	Wear limit
Cylinder bore "C"	54.000–54.014 mm (2.1260–2.1265 in)	54.1 mm (2.130 in)
Taper "T"	—	0.05 mm (0.0020 in)

"C" = Maximum Aa–Cb
"T" = (Maximum Aa, or Ab) - (Maximum Ba, or Bb)

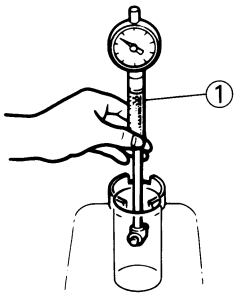

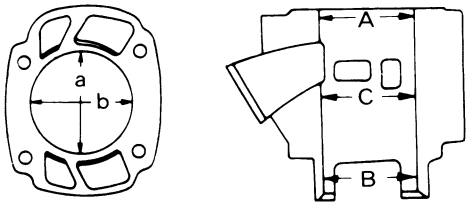

CHECKING THE PISTON

1. Eliminate:
   - Carbon deposits
     From the piston crown "a" and ring groove "b".

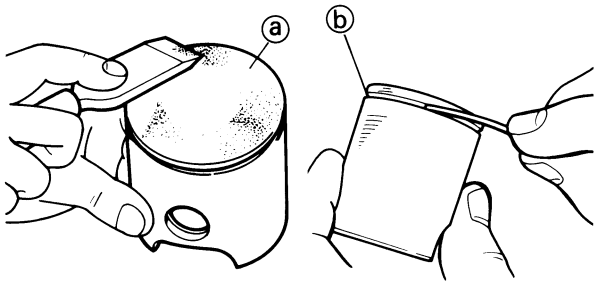

2. Inspect:
   - Piston wall
     Score marks → Repair or replace.
3. Measure:
   - Piston skirt diameter
     Use micrometer "1".
     Measure the specific distance "a" from the bottom edge.
     Out of specification → Replace.

	Distance "a"	Piston dia.
	17.5 mm (0.69 in)	53.957–53.972 mm (2.1243–2.1249 in)

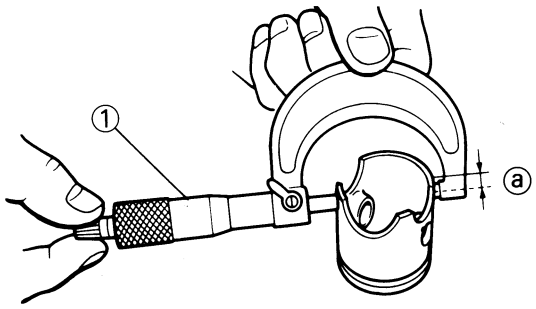

CHECKING THE PISTON PIN AND SMALL END BEARING

1. Inspect:
   - Piston pin
   - Small end bearing
     Signs of heat discoloration → Replace.

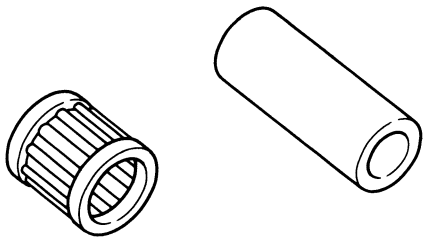

2. Measure:
   - Piston pin outside diameter
     Use micrometer "1".
     Out of limit → Replace.

	Piston pin outside diameter:	
	Standard	<Limit>
	14.995–15.000 mm (0.5904–0.5906 in)	14.975 mm (0.5896 in)

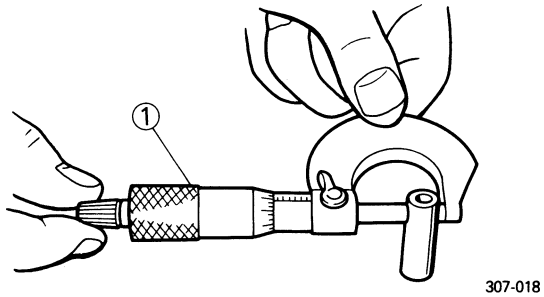

3. Check:
   • Free play (when the piston pin "1" is in place in the piston "2")
   There should be no noticeable for the play.
   Free play exists→Replace piston pin and/or piston.

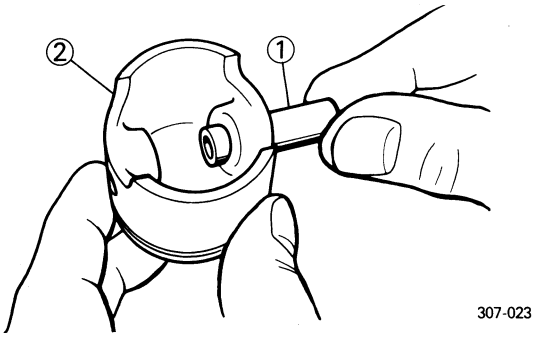

4. Install:
   • Small end bearing
   • Piston pin
   Into the small end of connecting rod.
5. Check:
   • Free play
   There should be no noticeable free play.
   Free play exists → Inspect the connecting rod for wear/Replace the pin and/or connecting rod as required.

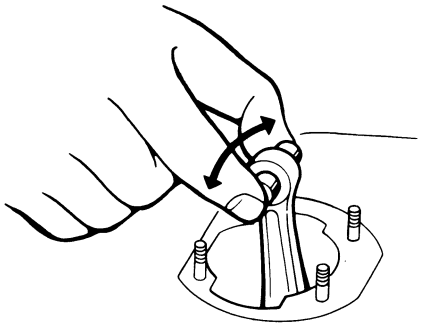

CHECKING THE PISTON RING

1. Install:
   • Piston ring
   Into the cylinder.
   Push the ring with the piston crown.
2. Measure:
   • End gap
   Use a thickness gauge "1".
   Out of limit → Replace.

Ring end gap (installed):	
Standard	**<Limit>**
0.5–0.7 mm (0.020–0.028 in)	**1.2 mm (0.047 in)**

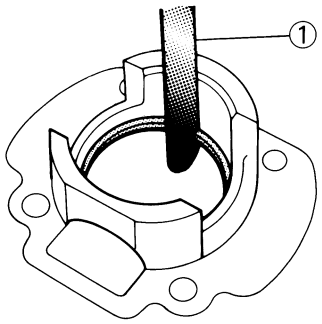

3. Measure:
   • Side clearance
   Use a thickness gauge "1".
   Out of limit → Replace piston and/or ring.

Side clearance:	
Standard	**<Limit>**
0.035–0.070 mm (0.0014–0.0028 in)	**0.1 mm (0.004 in)**

TIP
Check at several points.

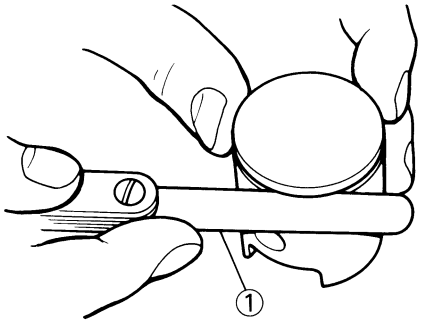

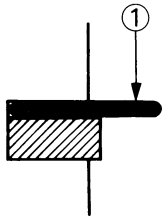

CHECKING THE PISTON CLEARANCE

1. Calculate:
   • Piston clearance
   Out of limit→Replace piston, and piston ring and/or cylinder.
   Refer to "Cylinder" and "Piston".

PISTON CLEARANCE = CYLINDER BORE - PISTON DIAMETER

Piston clearance:	
Standard	<Limit>
0.040–0.045 mm (0.0016–0.0018 in)	0.1 mm (0.004 in)

CHECKING THE COMBINATION OF PISTON AND CYLINDER

1. Check:
   • Cylinder mark "a"

Cylinder mark "a"	Cylinder size
A	54.000–54.002 mm (2.1260–2.1261 in)
B	54.004–54.006 mm (2.1261–2.1262 in)
C	54.008–54.010 mm (2.1263–2.1264 in)
D	54.012–54.014 mm (2.1265–2.1265 in)

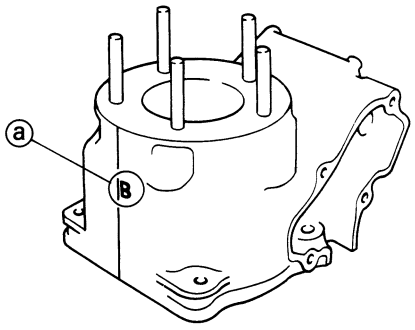

2. Check:
   • Piston mark "a"

Piston mark "a" (color)	Piston size
A (red)	53.957–53.960 mm (2.1243–2.1244 in)
B (orange)	53.961–53.964 mm (2.1244–2.1246 in)
C (green)	53.965–53.968 mm (2.1246–2.1247 in)
D (purple)	53.969–53.972 mm (2.1248–2.1249 in)

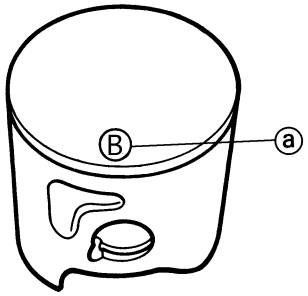

3. Combination:
   Combine the piston and cylinder by the following chart.

Cylinder mark	Piston mark (color)
A	A (red)
B	B (orange)
C	C (green)
D	D (purple)

TIP
When you purchase a cylinder, you cannot designate its size. Choose the piston that matches the above chart.

CHECKING THE POWER VALVE

1. Inspect:
   • Power valve 1,2 "1"
   Wear/Damage → Replace.
   Carbon deposits → Remove.
   • Valve holder "2"
   • Link lever "3"
   • Valve shaft "4"
   • Collar "5"
   Wear/Damage → Replace.
   • Spring "6"
   Broken → Replace.

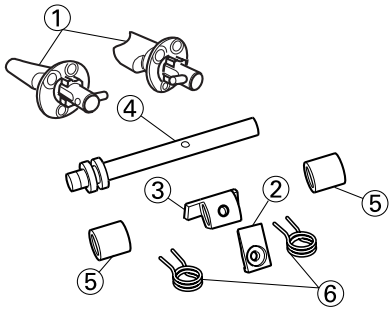

CHECKING THE POWER VALVE HOLE ON CYLINDER

1. Remove:
   • Carbon deposits
   From power valve hole surface "a".

TIP
Do not use a sharp instrument. Avoid scratching the aluminum.

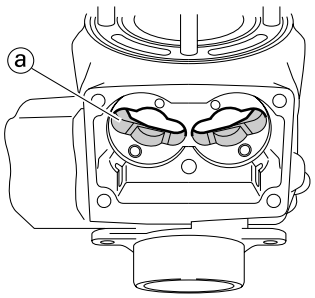

INSTALLING THE POWER VALVE

1. Install:
   - Power valve 1 "1"
   - Power valve 2 "2"
   - Bolt (power valve) "3"

	Bolt (power valve): 8 Nm (0.8 m•kg, 5.8 ft•lb)

TIP
Install the power valve at cut-away faced "a" for down side.

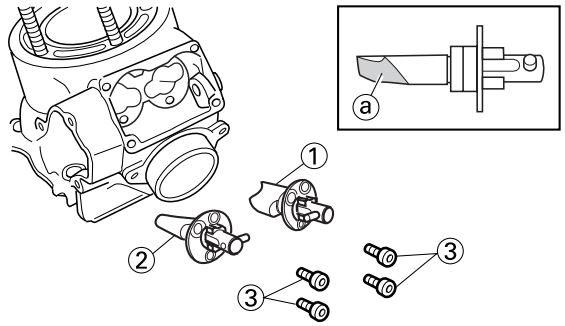

2. Install:
   - Spring "1"
   - Link lever "2"
   - Collar "3"
   - Valve shaft "4"
   - Valve holder "5"
   - Bolt (link lever) "6"

	Bolt (link lever): 4 Nm (0.4 m•kg, 2.9 ft•lb)

TIP
- Install the spring to the link lever, and then to the cylinder.
- Install the spring with its stopper portion "a" facing inward.
- Apply the lithium soap base grease on the oil seal lip.

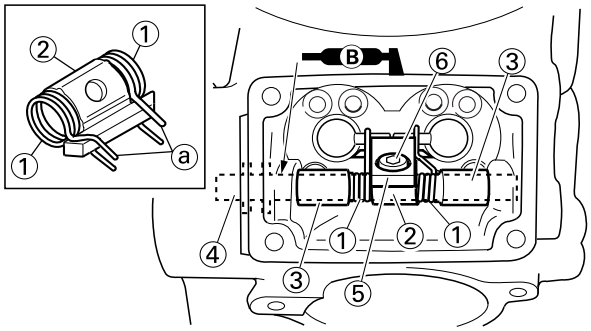

3. Install:
   - Thrust plate "1"
   - Screw (thrust plate) "2"

	Screw (thrust plate): 4 Nm (0.4 m•kg, 2.9 ft•lb)

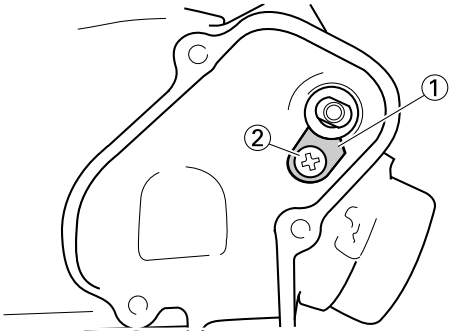

4. Check:
   - Power valve smooth movement
     Unsmooth movement → Repair or replace.

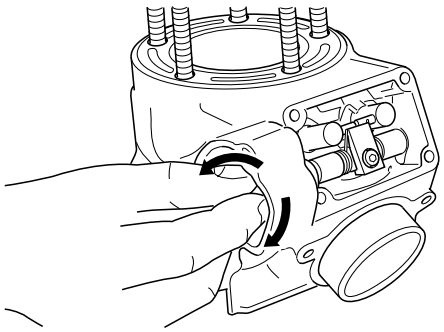

5. Install:
   - Gasket (power valve cover) "1" New
   - Power valve cover "2"
   - Screw (power valve cover) "3"

	Screw (power valve cover): 5 Nm (0.5 m•kg, 3.6 ft•lb)

   - YPVS breather hose "4"

TIP
- Install the power valve cover so that the arrow mark "a" faces upward.
- Install the clamp of the YPVS breather hose with its opening portion "b" facing backward.

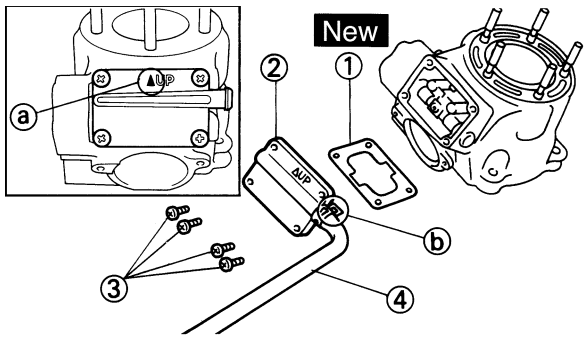

INSTALLING THE PISTON RING AND PISTON

1. Install:
   • Piston ring "1"

TIP

- Take care not to scratch the piston or damage the piston ring.
- Align the piston ring gap with the pin "2".
- After installing the piston ring, check the smooth movement of it.

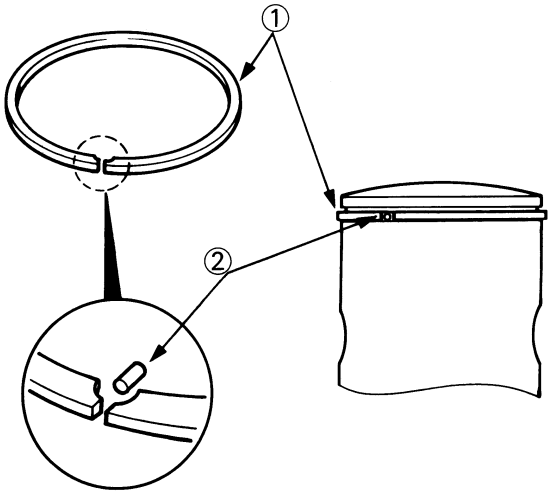

2. Install:
   • Gasket (cylinder) "1" New
   • Small end bearing "2"
   • Dowel pin "3"

TIP

- Apply the engine oil onto the bearing (crankshaft and connecting rod) and connecting rod big end washers.
- Install the gasket with the seal print side toward the crankcase.

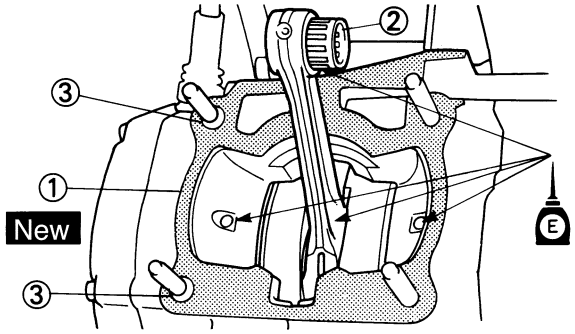

3. Install:
   • Piston "1"
   • Piston pin "2" New
   • Piston pin clip "3"

TIP

- The arrow "a" on the piston dome must point to exhaust side.
- Before installing the piston pin clip, cover the crankcase with a clean rag to prevent the piston pin clip from falling into the crankcase cavity.

NOTICE

- **When installing the piston pin clip, use the hand so that it may not be distorted.**
- **Do not allow the clip open ends to meet the piston pin slot "b".**

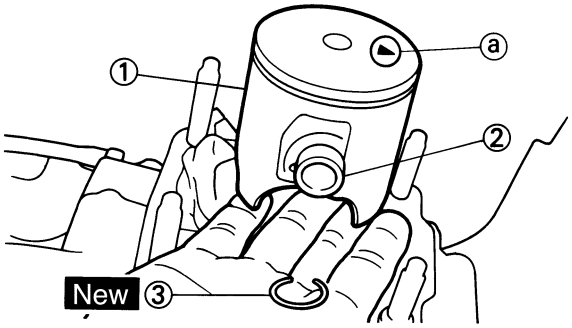

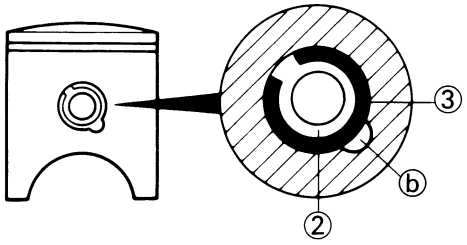

INSTALLING THE CYLINDER HEAD AND CYLINDER

1. Apply:
   • Engine oil
   To piston "1", piston ring "2" and cylinder surface.



2. Install:
   • Cylinder "1"

NOTICE

Make sure the piston ring is properly positioned. Install the cylinder with one hand while compressing the piston ring with the other hand.

TIP

After installing, check the smooth movement of the piston.

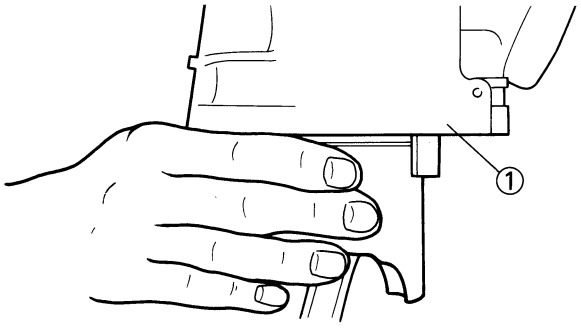

3. Install:
   • Nut (cylinder) "1"

	Nut (cylinder): **30 Nm (3.0 m•kg, 22 ft•lb)**

TIP

Tighten the nuts in stage, using a crisscross pattern.

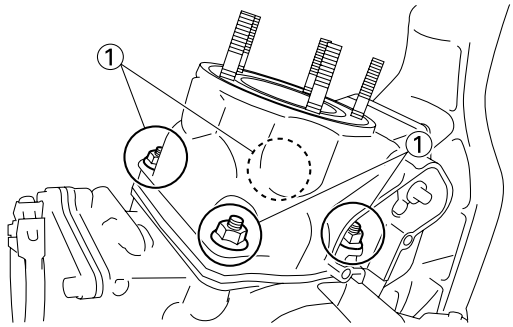

4. Install:
   • Collar "1"
   • Push rod "2"
   • Plain washer "3"
   • Bolt (push rod) "4"

	Bolt (push rod): **5 Nm (0.5 m•kg, 3.6 ft•lb)**

TIP

- Set the collar "5" included in owner's tool kit to install the bolt (push rod).
- Do not forget to remove the collar.

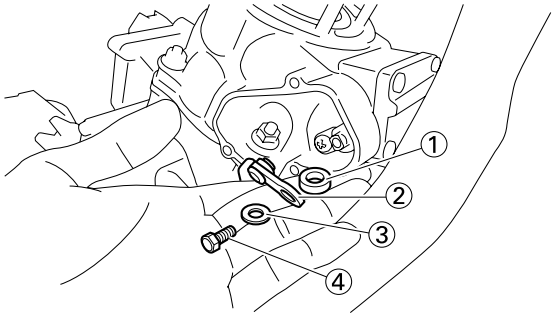

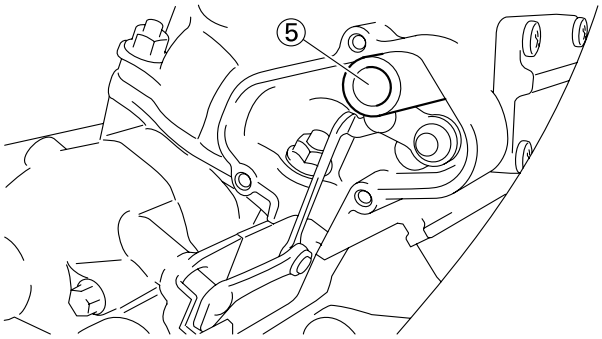

5. Install:
   • Gasket (power valve housing) New
   • Power valve housing "1"
   • Bolt (power valve housing) "2"

	Bolt (power valve housing): 4 Nm (0.4 m•kg, 2.9 ft•lb)

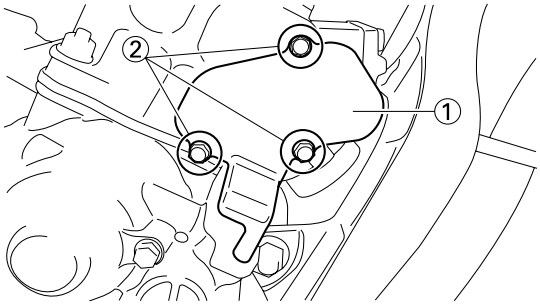

6. Install:
   • O-ring "1" New

TIP
Apply the lithium soap base grease on the O-rings.

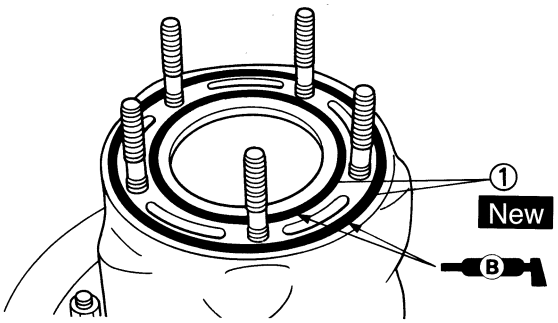

7. Install:
   • Cylinder head "1"
   • Copper washer "2" New
   • Nut (cylinder head) "3"

	Nut (cylinder head): 28 Nm (2.8 m•kg, 20 ft•lb)

TIP
Tighten the nuts (cylinder head) in stage, using a crisscross pattern.

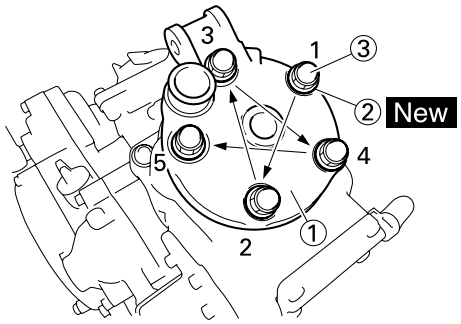

8. Install:
   • Engine bracket "1"
   • Bolt (engine bracket) "2"

	Bolt (engine bracket): 34 Nm (3.4 m•kg, 24 ft•lb)

   • Engine mounting bolt (upper) "3"

	Engine mounting bolt (upper): 34 Nm (3.4 m•kg, 24 ft•lb)

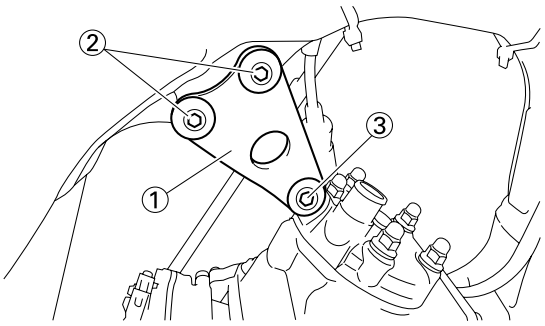

9. Install:
   • Spark plug "1"

	Spark plug: 20 Nm (2.0 m•kg, 14 ft•lb)

   • Spark plug cap "2"

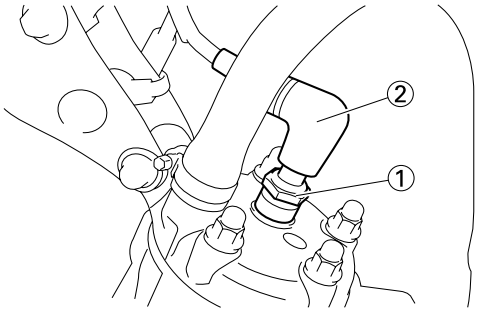

CLUTCH

REMOVING THE CLUTCH

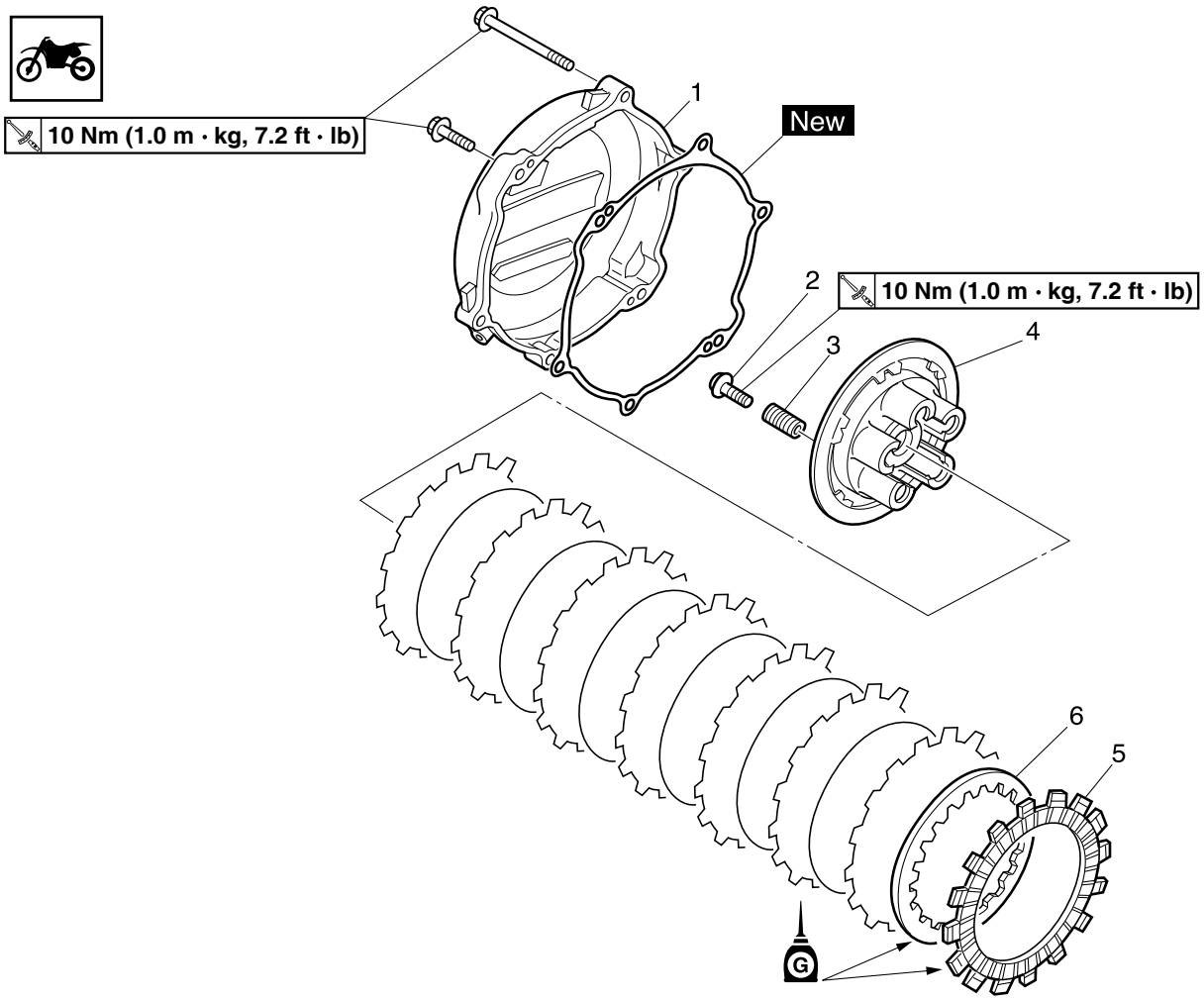

Order	Part name	Q'ty	Remarks
	Drain the transmission oil.		Refer to "CHANGING THE TRANSMISSION OIL" section in the CHAPTER 3.
	Bolt (brake pedal)		Shift the brake pedal downward.
	Rotor and stator		Refer to "CDI MAGNETO" section.
	Clutch cable		Disconnect at engine side.
1	Clutch cover	1	
2	Bolt (clutch spring)	6	
3	Clutch spring	6	
4	Pressure plate	1	
5	Friction plate	8	
6	Clutch plate	7	

REMOVING THE CLUTCH BOSS

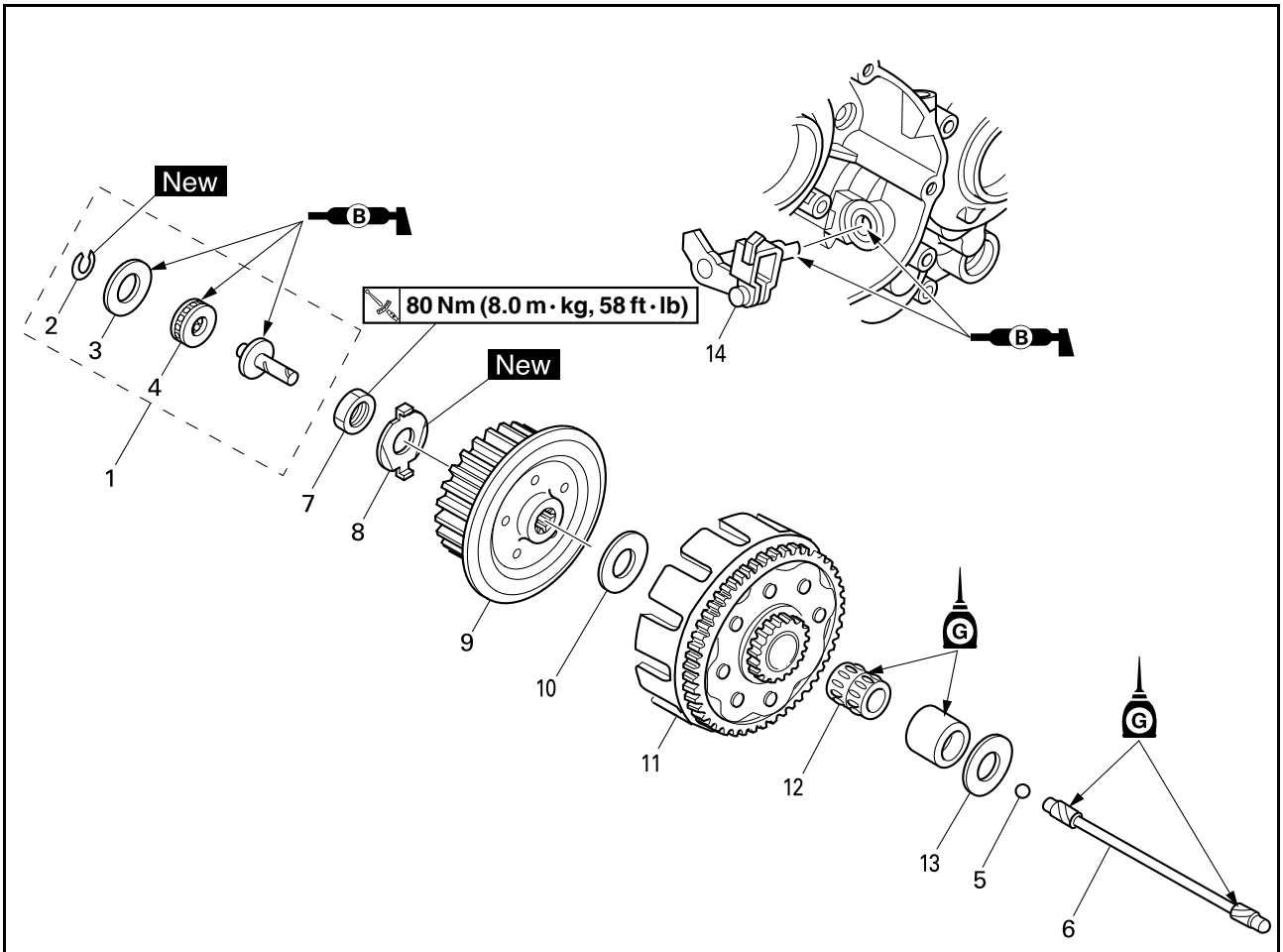

Order	Part name	Q'ty	Remarks
1	Push rod 1	1	
2	Circlip	1	
3	Washer	1	
4	Bearing	1	
5	Ball	1	
6	Push rod 2	1	
7	Nut (clutch boss)	1	Refer to removal section.
8	Lock washer	1	Refer to removal section.
9	Clutch boss	1	Refer to removal section.
10	Thrust washer [D=ø34mm (1.34 in)]	1	
11	Primary driven gear	1	
12	Bearing	1	
13	Thrust washer [D=ø34mm (1.34 in)]	1	
14	Push lever shaft	1	

REMOVING THE CLUTCH BOSS

1. Remove:
   - Nut "1"
   - Lock washer "2"
   - Clutch boss "3"

TIP

Straighten the lock washer tab and use the clutch holding tool "4" to hold the clutch boss.

	Clutch holding tool: **YM-91042/90890-04086**

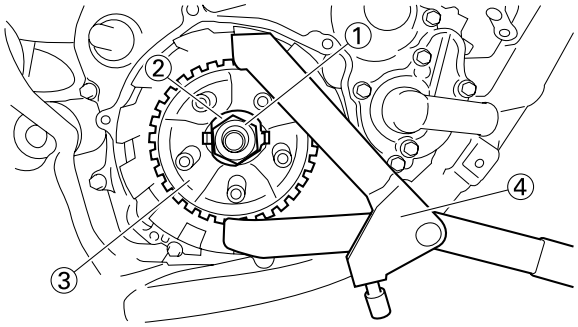

A B

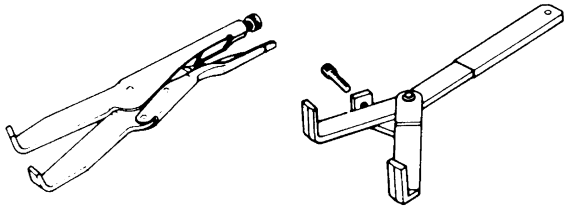

A. For USA and CDN
B. Except for USA and CDN

CHECKING THE CLUTCH HOUSING AND BOSS

1. Inspect:
   - Clutch housing "1"
     Cracks/wear/damage → Replace.
   - Clutch boss "2"
     Scoring/wear/damage → Replace.

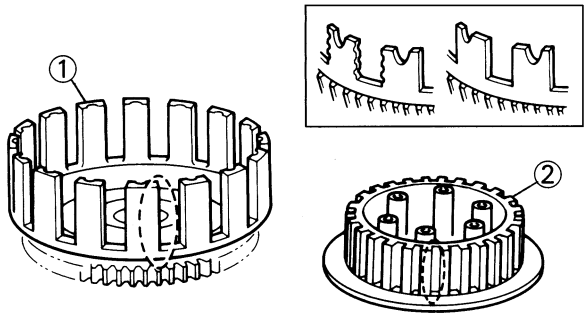

CHECKING THE PRIMARY DRIVEN GEAR

1. Check:
   - Circumferential play
     Free play exists → Replace.
   - Gear teeth "a"
     Wear/damage → Replace.

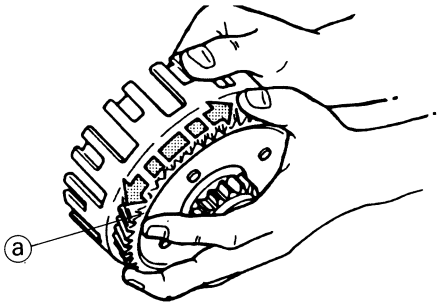

311-021

CHECKING THE CLUTCH SPRINGS

1. Measure:
   - Clutch spring free length "a"
     Out of specification→Replace springs as a set.

	Clutch spring free length: **40.1 mm (1.579 in)** **<Limit>: 38.1 mm (1.500 in)**

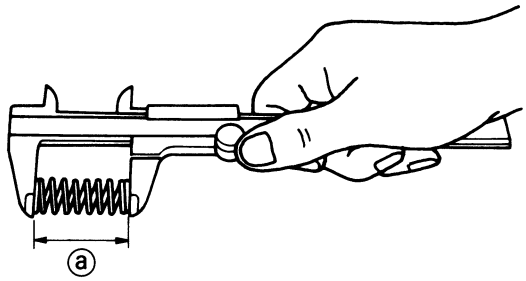

CHECKING THE FRICTION PLATES

1. Measure:
   - Friction plate thickness
     Out of specification → Replace friction plate as a set.
     Measure at all four points.

	Friction plate thickness: **2.9–3.1 mm (0.114–0.122 in)** **<Limit>: 2.8 mm (0.110 in)**

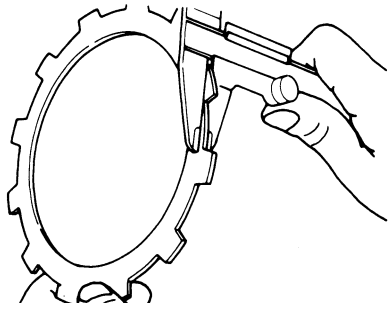

CHECKING THE CLUTCH PLATES

1. Measure:
   • Clutch plate warpage
   Out of specification → Replace clutch plate as a set.
   Use a surface plate "1" and thickness gauge "2".

	Warp limit: **0.2 mm (0.008 in)**

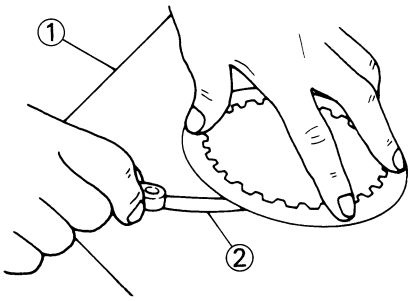

CHECKING THE PUSH LEVER SHAFT

1. Inspect:
   • Push lever shaft "1"
   Wear/Damage → Replace.

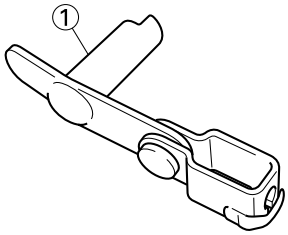

CHECKING THE PUSH ROD

1. Inspect:
   • Push rod 1 "1"
   • Bearing "2"
   • Washer "3"
   • Push rod 2 "4"
   • Ball "5"
   Wear/damage/bend → Replace.

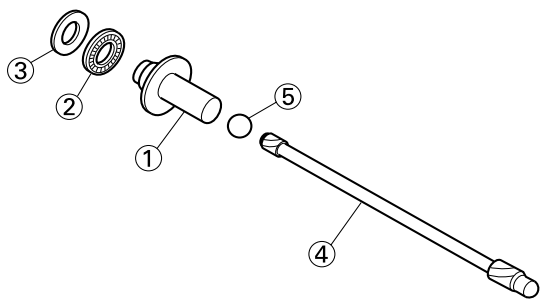

INSTALLING THE PUSH LEVER SHAFT

1. Install:
   • Push lever shaft "1"

TIP
Apply the lithium soap base grease on the oil seal lip and push lever shaft.

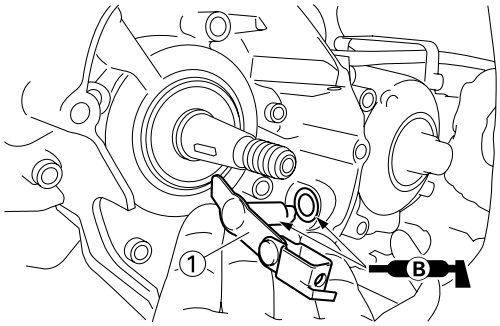

INSTALLING THE CLUTCH

1. Install:
   • Thrust washer [D=ø34 mm (1.34 in)] "1"
   • Spacer "2"
   • Bearing "3"
   • Primary driven gear "4"

TIP
Apply the transmission oil on the bearing, spacer and primary driven gear inner circumference.

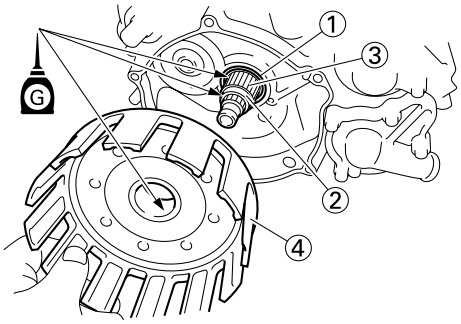

2. Install:
   • Thrust washer [D=ø34 mm (1.34 in)] "1"
   • Clutch boss "2"

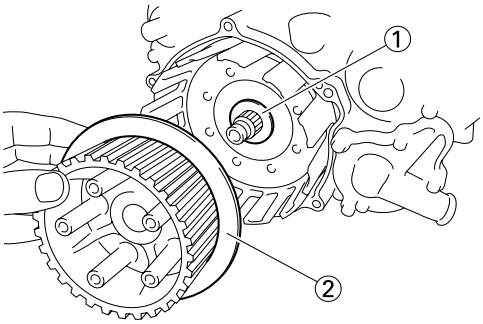

3. Install:
   • Lock washer "1" New
   • Nut (clutch boss) "2"

	Nut (clutch boss): **80 Nm (8.0 m•kg, 58 ft•lb)**

TIP
Use the clutch holding tool "3" to hold the clutch boss.

	Clutch holding tool: **YM-91042/90890-04086**

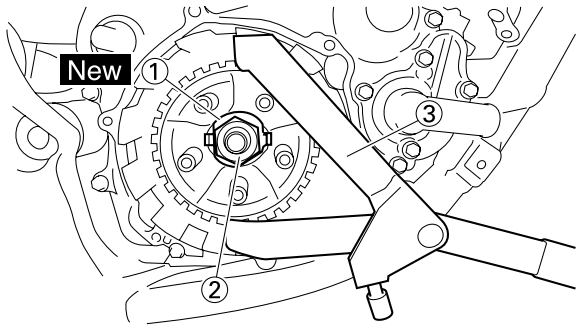

A B

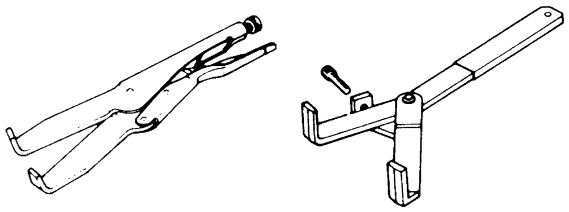

A. For USA and CDN
B. Except for USA and CDN

4. Bend the lock washer "1" tab.

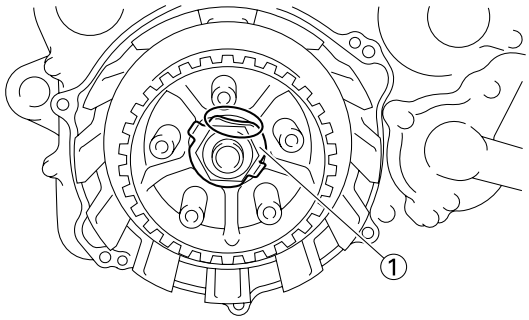

5. Install:
   • Friction plate "1"
   • Clutch plate "2"

TIP
• Install the clutch plates and friction plates alternately on the clutch boss, starting with a friction plate and ending with a friction plate.
• Apply the transmission oil on the friction plates and clutch plates.

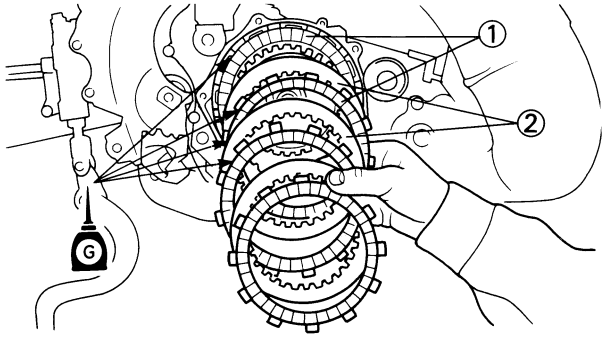

6. Install:
   • Bearing "1"
   • Washer "2"
   • Circlip "3" New
     To push rod 1 "4".

TIP
Apply the lithium soap base grease on the bearing and washer.

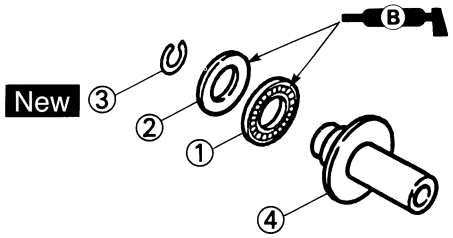

7. Install:
   • Push rod 2 "1"
   • Ball "2"
   • Push rod 1 "3"

TIP
Apply the transmission oil on the push rod 1, 2 and ball.

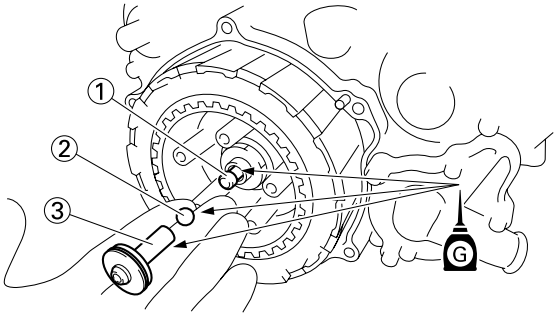

8. Install:
   • Pressure plate "1"

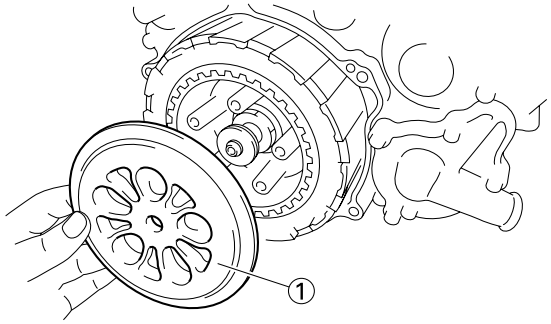

9. Install:
   • Clutch spring "1"
   • Bolt (clutch spring) "2"

	Bolt (clutch spring): **10 Nm (1.0 m•kg, 7.2 ft•lb)**

TIP
Tighten the bolts in stage, using a crisscross pattern.

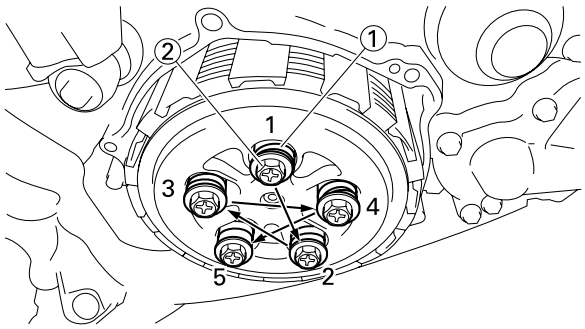

10. Install:
   • Dowel pin "1"
   • Gasket (clutch cover) "2" New

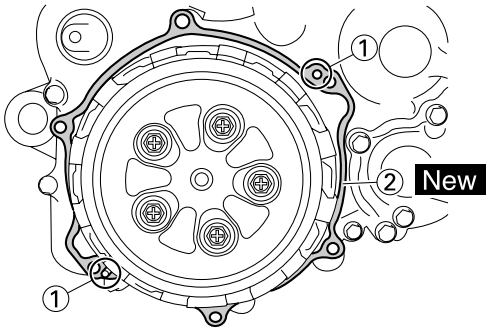

11. Install:
   • Clutch cover "1"
   • Bolt (clutch cover)

	Bolt (clutch cover): **10 Nm (1.0 m•kg, 7.2 ft•lb)**

TIP
Tighten the bolts in stage, using a crisscross pattern.

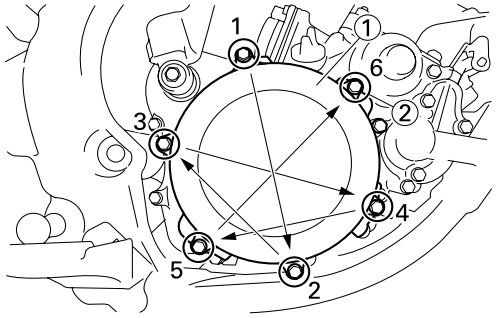

12. Install:
   • O-ring "1" New
   • Clutch cable "2"

TIP
Apply the lithium soap base grease on the O-ring.

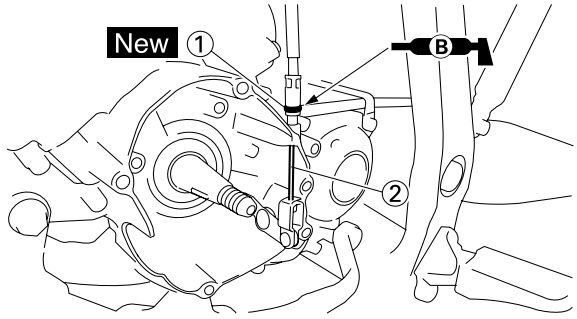

KICK SHAFT AND SHIFT SHAFT

REMOVING THE PRIMARY DRIVE GEAR

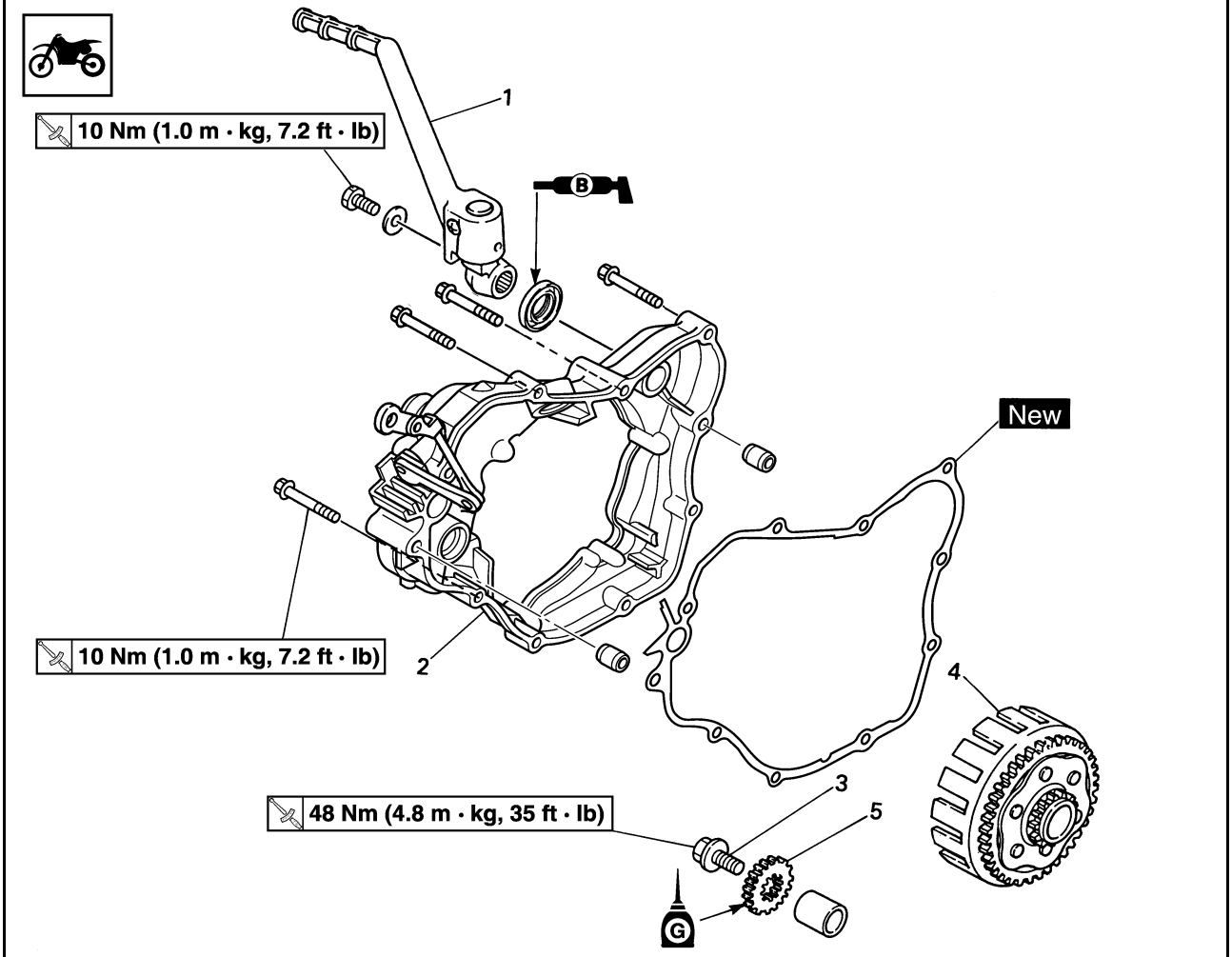

Order	Part name	Q'ty	Remarks
	Drain the transmission oil.		Refer to "CHANGING THE TRANSMISSION OIL" section in the CHAPTER 3.
	Clutch cable		Disconnect at engine side.
	Bolt (brake pedal)		Shift the brake pedal downward.
	Radiator hose 4		Disconnect at water pump side.
	Bolt (push rod)		Refer to "CYLINDER HEAD, CYLINDER AND PISTON" section.
1	Kickstarter crank	1	
2	Crankcase cover (right)	1	
3	Bolt (Primary drive gear)	1	Only loosening. Refer to removal section.
4	Primary driven gear	1	Refer to "CLUTCH" section.
5	Primary drive gear	1	

REMOVING THE KICK SHAFT AND SHIFT SHAFT

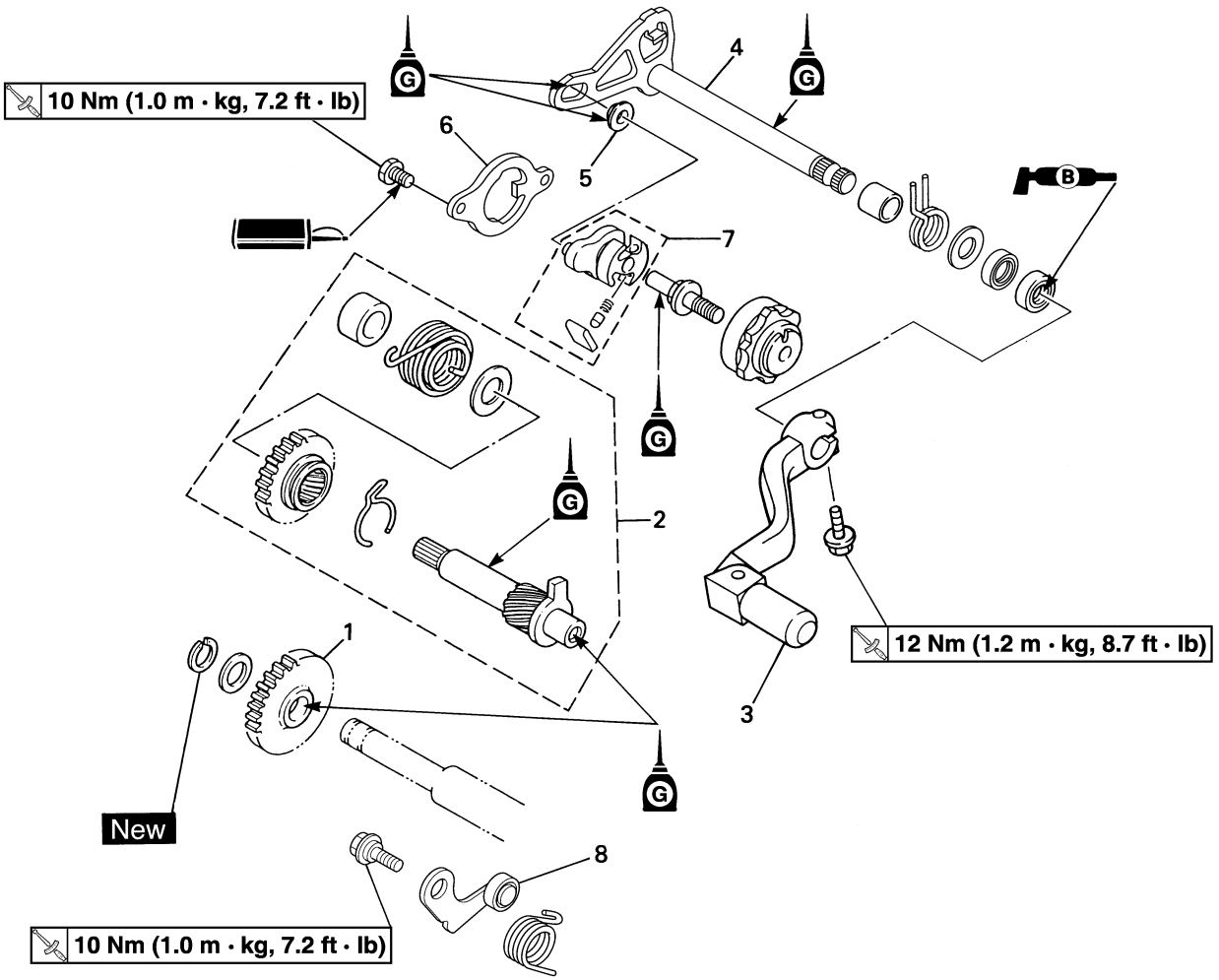

Order	Part name	Q'ty	Remarks
1	Kick idle gear	1	
2	Kick shaft assembly	1	Refer to removal section.
3	Shift pedal	1	
4	Shift shaft	1	
5	Roller	1	
6	Shift guide	1	Refer to removal section.
7	Shift lever assembly	1	Refer to removal section.
8	Stopper lever	1	

REMOVING THE PRIMARY DRIVE GEAR

1. Loosen:
   • Bolt (primary drive gear) "1"

TIP

Place an aluminum plate "a" between the teeth of the primary drive gear "2" and driven gear "3".

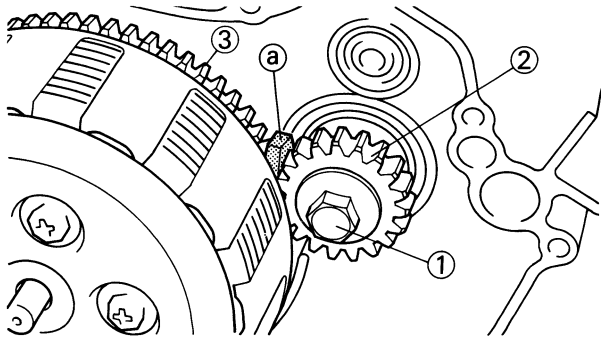

REMOVING THE KICK SHAFT ASSEMBLY

1. Remove:
   • Kick shaft assembly "1"

TIP

Unhook the torsion spring "2" from the hole "a" in the crankcase.

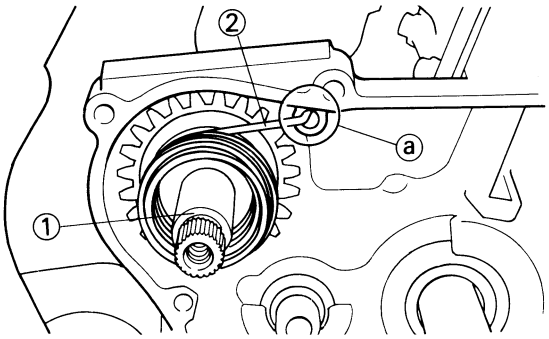

REMOVING THE SHIFT GUIDE AND SHIFT LEVER ASSEMBLY

1. Remove:
   • Bolt (shift guide)
   • Shift guide "1"
   • Shift lever assembly "2"

TIP

The shift lever assembly is disassembled at the same time as the shift guide.

CHECKING THE KICK GEAR CLIP

1. Measure:
   • Kick clip friction force
   Out of specification → Replace.
   Use a spring gauge "1".

	Kick clip friction force: **0.8–1.2 kg (1.8–2.6 lb)**

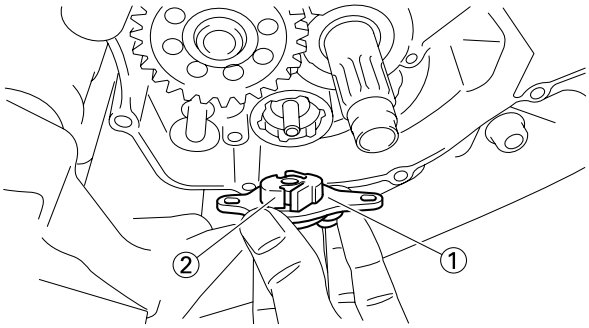

CHECKING THE KICK SHAFT AND KICK GEAR

1. Check:
   • Kick gear smooth movement
   Unsmooth movement → Replace.
2. Inspect:
   • Kick shaft "1"
   Wear/damage → Replace.

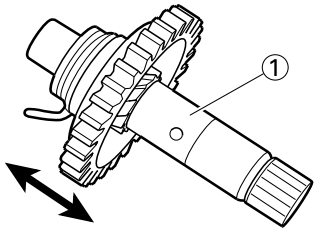

CHECKING THE KICK GEAR AND KICK IDLE GEAR

1. Inspect:
   • Kick gear "1"
   • Kick idle gear "2"
   • Gear teeth "a"
   Wear/damage → Replace.

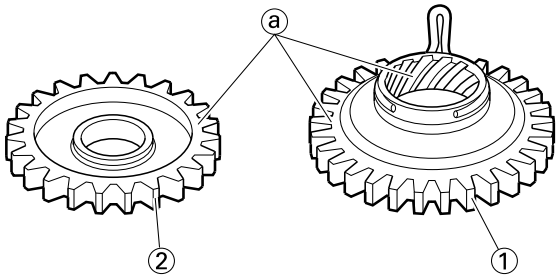

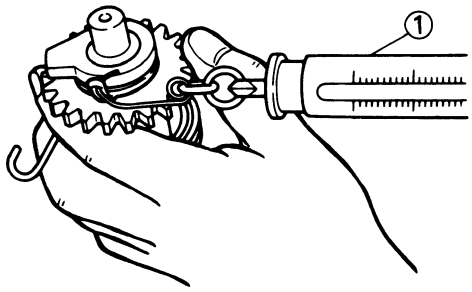

CHECKING THE SHIFT SHAFT

1. Inspect:
   - Shift shaft "1"
     Bend/damage → Replace.
   - Spring "2"
     Broken → Replace.

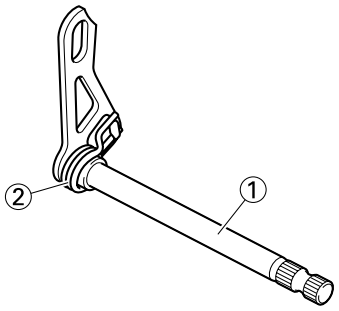

CHECKING THE SHIFT GUIDE AND SHIFT LEVER ASSEMBLY

1. Inspect:
   - Shift guide "1"
   - Shift lever "2"
   - Pawl "3"
   - Pawl pin "4"
   - Spring "5"
     Wear/damage → Replace.

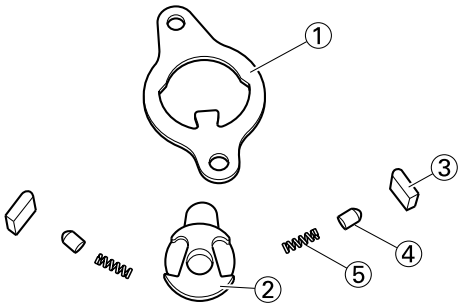

CHECKING THE STOPPER LEVER

1. Inspect:
   - Stopper lever "1"
     Wear/damage → Replace.
   - Roller "2"
     Rotate outer race with a finger.
     Rough spot/Seizure → Replace the stopper lever.
   - Torsion spring "3"
     Broken → Replace.

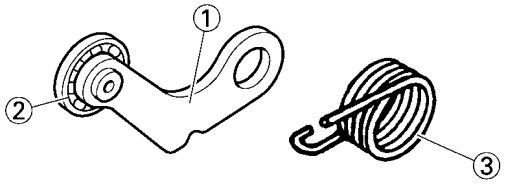

CHECKING THE PRIMARY DRIVE GEAR AND PRIMARY DRIVEN GEAR

1. Inspect:
   - Primary drive gear "1"
   - Primary driven gear "2"
     Wear/Damage → Replace.

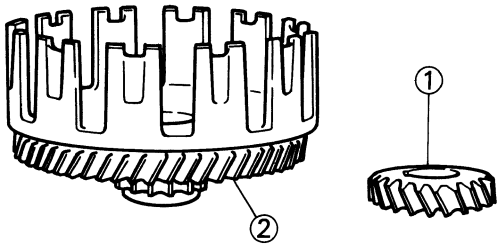

INSTALLING THE STOPPER LEVER

1. Install:
   - Torsion spring "1"
   - Stopper lever "2"
   - Bolt (stopper lever) "3"

	**Bolt (stopper lever):** **10 Nm (1.0 m•kg, 7.2 ft•lb)**

TIP

- Align the stopper lever roller with the slot on segment.
- When installing the stopper lever, make sure that the torsion spring is in the position as shown.

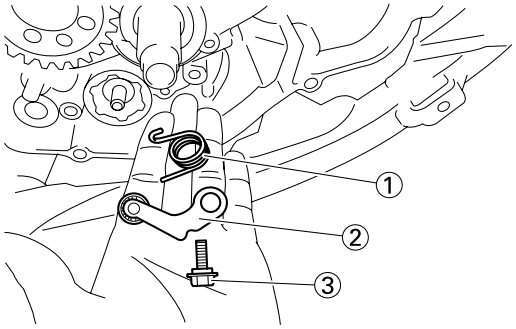

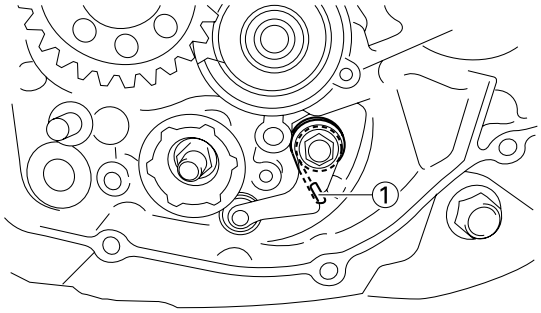

INSTALLING THE SHIFT GUIDE AND SHIFT LEVER ASSEMBLY

1. Install:
   - Spring "1"
   - Pawl pin "2"
   - Pawl "3"

   To shift lever "4".

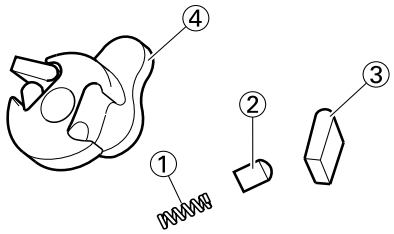

2. Install:
   - Shift lever assembly "1"

   To shift guide "2".

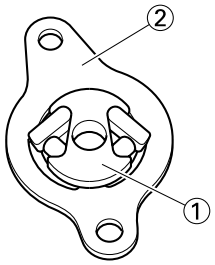

3. Install:
   - Shift lever assembly "1"
   - Shift guide "2"

TIP

- The shift lever assembly is installed at the same time as the shift guide.
- Apply the transmission oil on the bolt (segment) shaft.

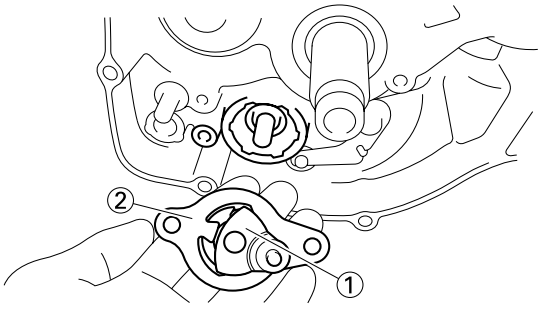

4. Install:
   - Bolt (shift guide) "1"

	Bolt (shift guide): 10 Nm (1.0 m•kg, 7.2 ft•lb)

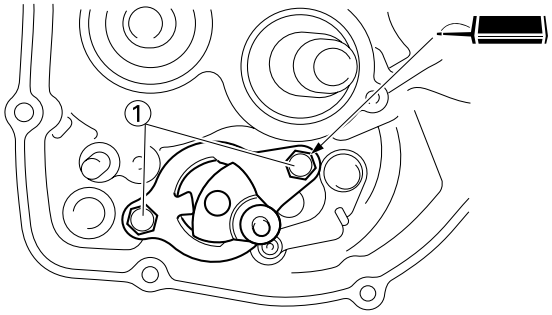

INSTALLING THE SHIFT SHAFT

1. Install:
   - Roller "1"
   - Shift shaft "2"

TIP

Apply the transmission oil on the roller and shift shaft.

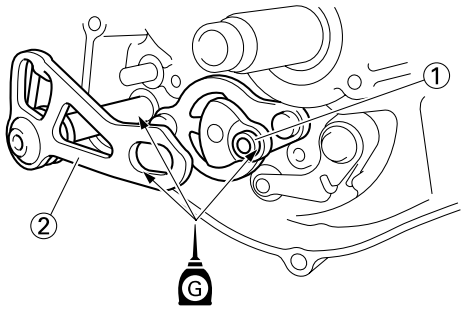

INSTALLING THE KICK SHAFT ASSEMBLY

1. Install:
   - Kick gear "1"
   - Washer "2"
   - Torsion spring "3"
     To kick shaft "4".

TIP

Make sure the stopper "a" of the torsion spring fits into the hole "b" on the kick shaft.

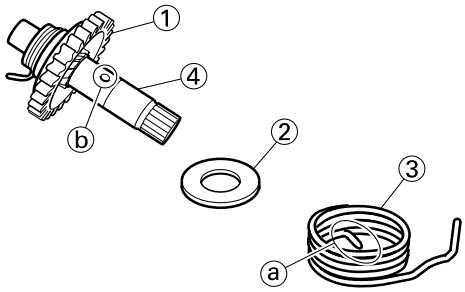

2. Install:
   - Spring guide "1"

TIP

Slide the spring guide into the kick shaft, make sure the groove "a" in the spring guide fits on the stopper of the torsion spring.

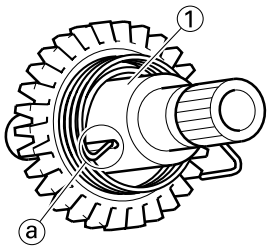

3. Install:
   - Kick shaft assembly "1"

TIP

- Apply the transmission oil on the kick shaft.
- Slide the kick shaft assembly into the crankcase, make sure the clip "2" and kick shaft stopper "a" fit into their home position "b", "c".

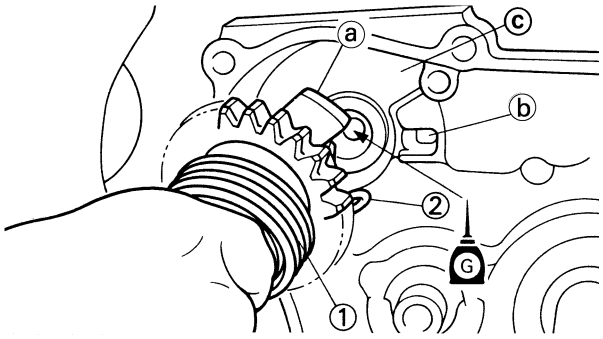

4. Hook:
   - Torsion spring "1"

TIP

Turn the torsion spring clockwise and hook into the proper hole "a" in the crankcase.

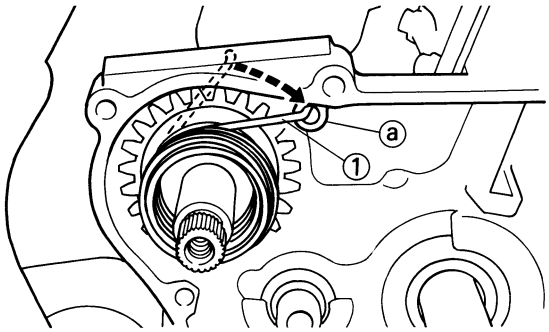

INSTALLING THE KICK IDLE GEAR

1. Install:
   - Kick idle gear "1"
   - Washer "2"
   - Circlip "3" New

TIP

Apply the transmission oil on the kick idle gear inner circumference.

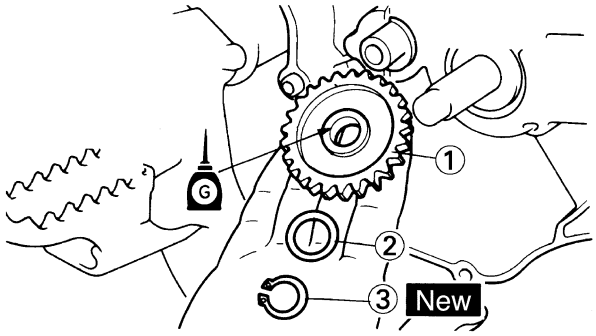

INSTALLING THE PRIMARY DRIVE GEAR

1. Install:
   - Spacer "1"
   - Primary drive gear "2"
   - Bolt "3"

TIP
Install the primary drive gear with its depressed side toward you.

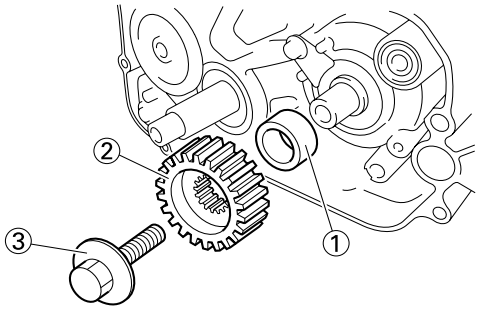

2. Install:
   - Primary driven gear
     Refer to "CLUTCH" section.
3. Tighten:
   - Bolt (primary drive gear) "1"

	Bolt (primary drive gear): 48 Nm (4.8 m•kg, 35 ft•lb)

TIP
Place an aluminum plate "a" between the teeth of the primary drive gear and driven gear.

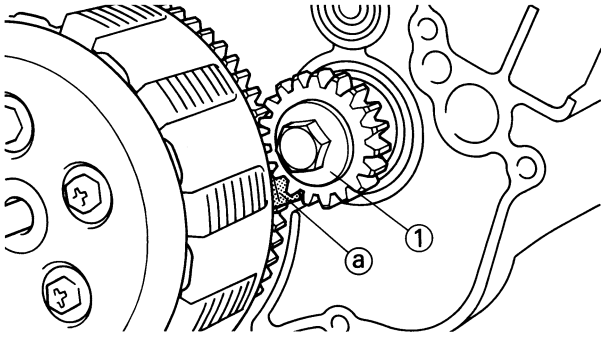

4. Install:
   - Dowel pin "1"
   - Gasket [crankcase cover (right)] "2" New

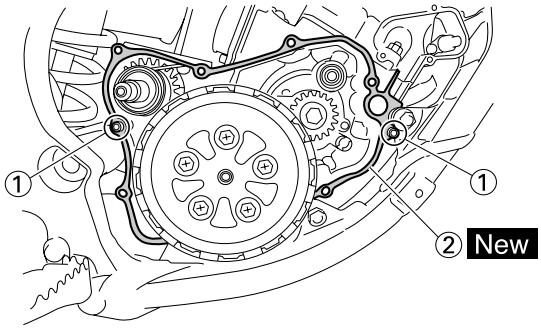

5. Install:
   - Crankcase cover (right) "1"

TIP
Mesh the governor gear "2", and impeller shaft gear "3" with primary drive gear "4".

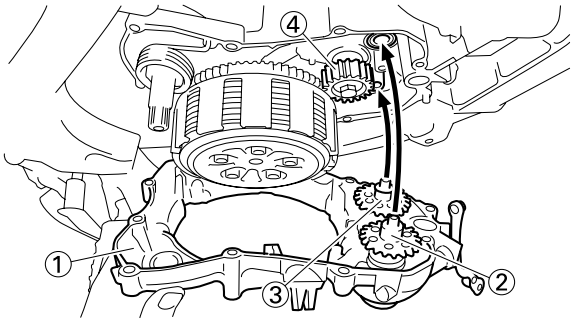

6. Install:
   - Bolt [crankcase cover (right)] "1"

	Bolt [crankcase cover (right)] : 10 Nm (1.0 m•kg, 7.2 ft•lb)

TIP
Tighten the bolts in stage, using a crisscross pattern.

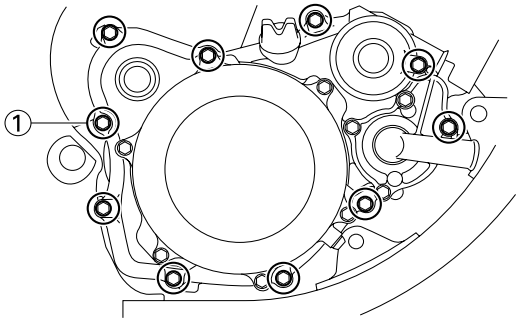

7. Install:
   • Kick starter "1"
   • Plain washer "2"
   • Bolt (kick starter) "3"

	Bolt (kick starter) : 10 Nm (1.0 m•kg, 7.2 ft•lb)

TIP
Install the kick starter closest to but not contacting the pillar tube "4".

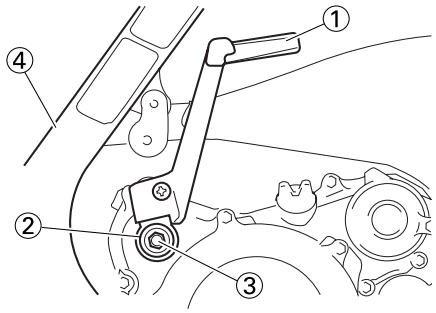

8. Install:
   • Shift pedal "1"
   • Bolt (shift pedal) "2"

	Bolt (shift pedal) : 12 Nm (1.2 m•kg, 8.7 ft•lb)

TIP
Align the upper line "a" of the shift pedal with the center "b" of the crankcase projection and rotate the shift pedal counterclockwise until it first engages. Then install the shift pedal.

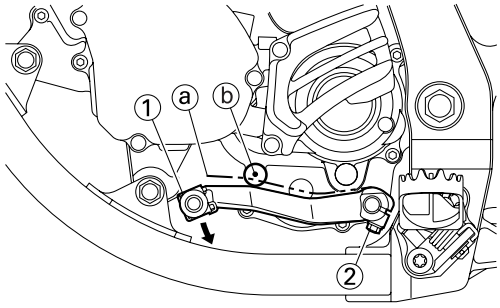

YPVS GOVERNOR

REMOVING THE YPVS GOVERNOR

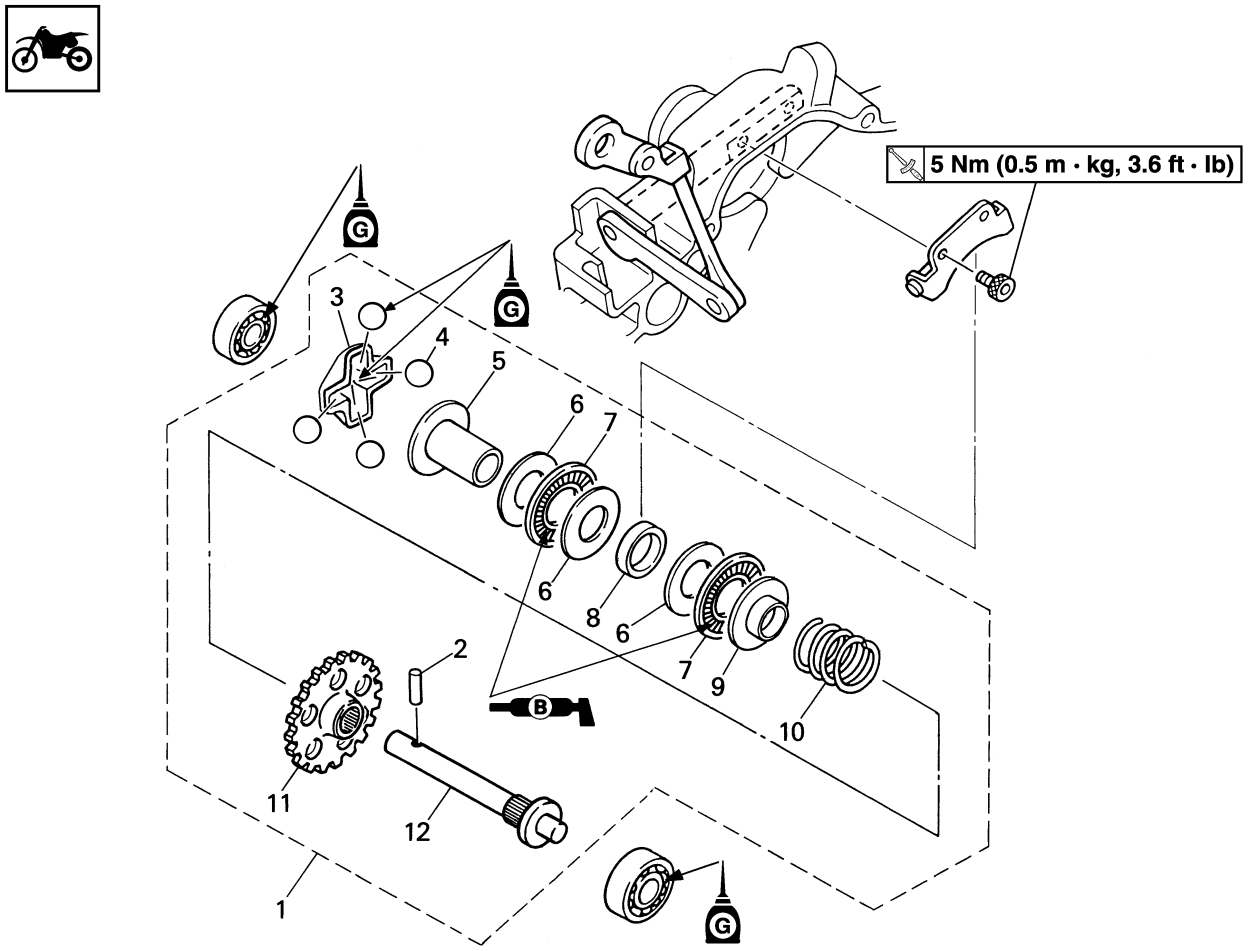

Order	Part name	Q'ty	Remarks
	Right crankcase cover		Refer to "KICK SHAFT AND SHIFT SHAFT" section.
1	Governor assembly	1	
2	Dowel pin	1	Refer to removal section.
3	Retainer	1	
4	Ball	4	
5	Retainer weight	1	
6	Plain washer	4	
7	Thrust bearing	2	
8	Collar	1	
9	Plate	1	
10	Compression spring	1	
11	Governor gear	1	
12	Governor shaft	1	

REMOVING THE GOVERNOR

1. Remove:
   • Dowel pin "1"

TIP
While compressing the spring, remove the dowel pin.

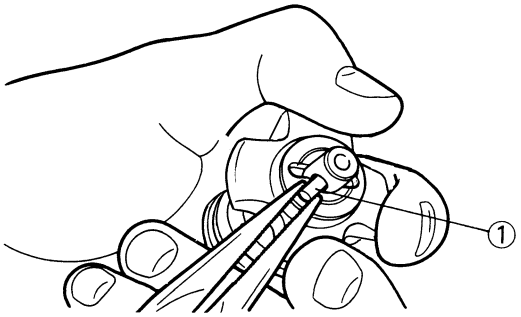

CHECKING THE GOVERNOR GROOVE

1. Inspect:
   • Washer "1"
   • Collar "2"
   Wear/Damage → Replace.

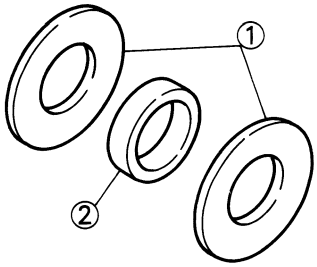

CHECKING THE BEARING

1. Inspect:
   • Thrust bearing "1"
   • Washer "2"
   Wear/Damage → Replace.

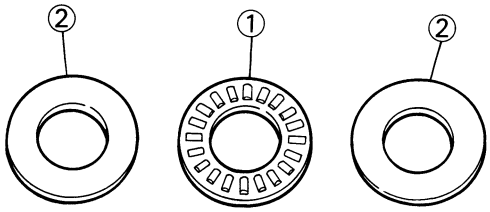

INSTALLING THE GOVERNOR

1. Install:
   • Governor gear "1"
   • Compression spring "2"
   • Plate "3"
   • Washer "4"
   • Thrust bearing "5"
   • Collar "6"
   • Retainer weight "7"
   To governor shaft "8".

TIP
Apply the lithium soap base grease on the thrust bearing.

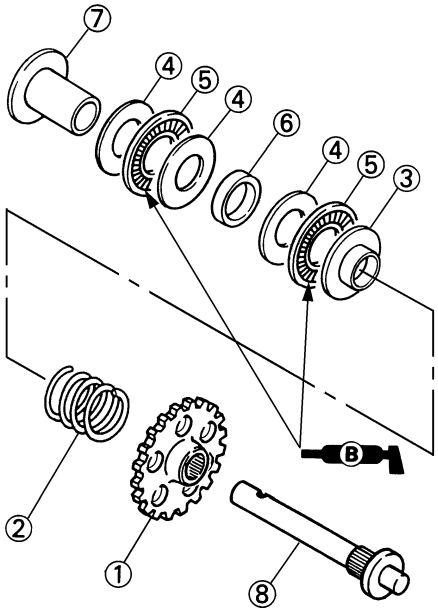

2. Install:
   • Ball "1"
   • Retainer "2"
   To governor shaft "3".

TIP
Apply the transmission oil on the retainer and ball.

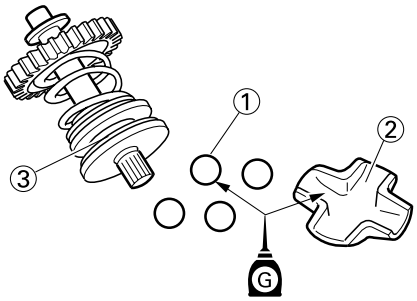

3. Install:
   • Dowel pin "1"

TIP
- While compressing the spring, install the dowel pin.
- Make sure the dowel pin fits into the groove "a" in the retainer.

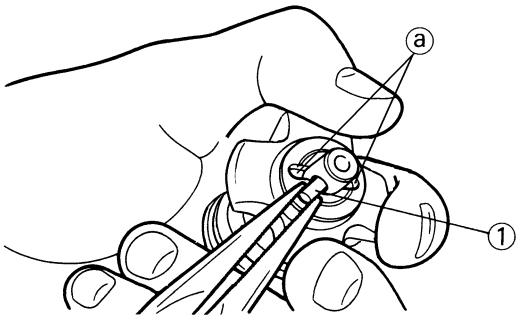

4. Install:
   • Governor assembly "1"

TIP
Align the groove "a" in the governor with the fork "b" and set the governor in the crankcase cover.

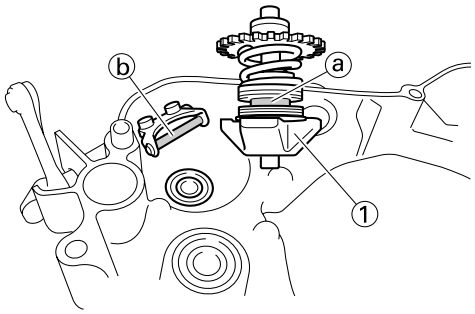

WATER PUMP

DISASSEMBLING THE WATER PUMP

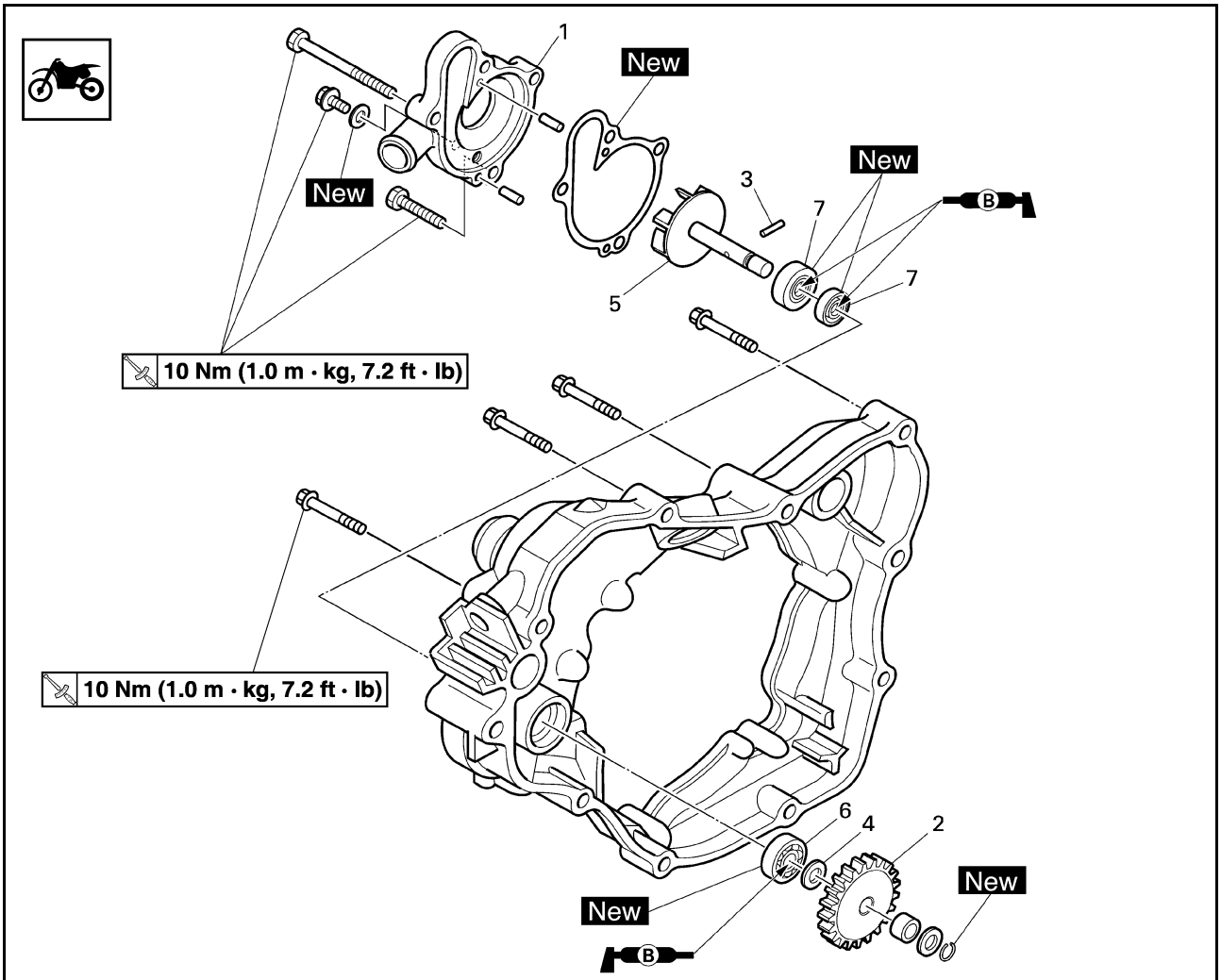

Order	Part name	Q'ty	Remarks
	Crankcase cover (right)		Refer to "KICK SHAFT AND SHIFT SHAFT" section.
1	Water pump housing cover	1	
2	Impeller shaft gear	1	
3	Dowel pin	1	
4	Plain washer	1	
5	Impeller shaft assembly	1	
6	Bearing	1	Refer to removal section.
7	Oil seal	2	Refer to removal section.

REMOVING THE OIL SEAL

TIP

- Replace the oil seal when transmission oil or coolant leaks out from the water pump housing hole at the bottom.
- Do not reuse the removed bearing and oil seal.

1. Remove:
   - Bearing "1"

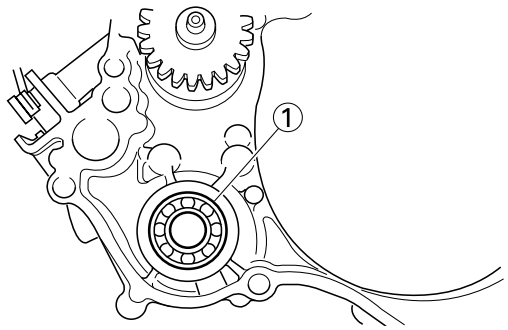

2. Remove:
   - Oil seal (outside) "1"
   - Oil seal (inside) "2"

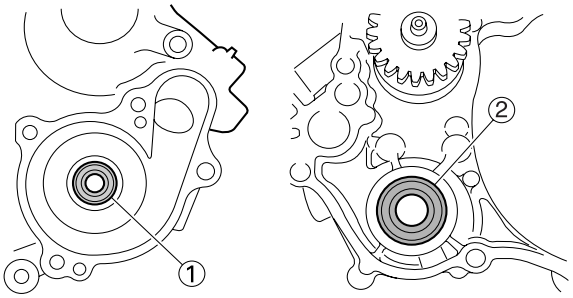

CHECKING THE IMPELLER SHAFT

1. Inspect:
   - Impeller shaft "1"
     Bend/wear/damage → Replace.
     Fur deposits → Clean.

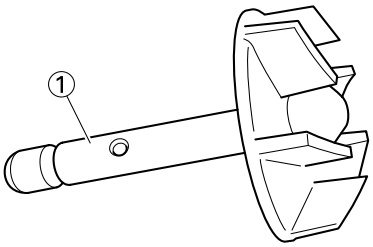

CHECKING THE IMPELLER SHAFT GEAR

1. Inspect:
   - Gear teeth "a"
     Wear/damage → Replace.

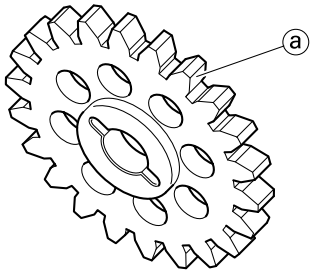

CHECKING THE BEARING

1. Inspect:
   - Bearing
     Rotate inner race with a finger.
     Rough spot/seizure → Replace.

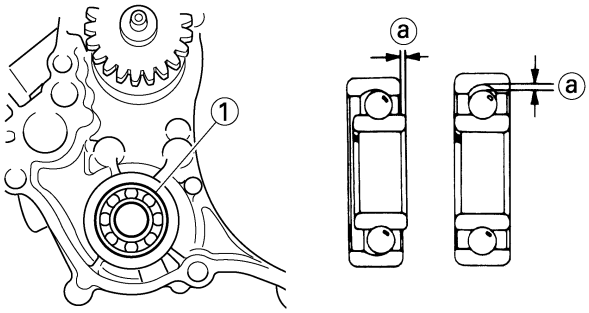

CHECKING THE OIL SEAL

1. Inspect:
   - Oil seal "1"
     Wear/damage → Replace.

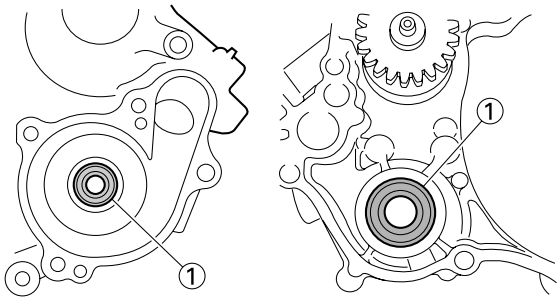

INSTALLING THE OIL SEAL

1. Install:
   - Oil seal (inside) "1" New
   - Oil seal (outside) "2" New

TIP

- Apply the lithium soap base grease on the oil seal lip.
- Install the oil seal with its manufacture's marks or numbers facing the right crankcase cover "3".

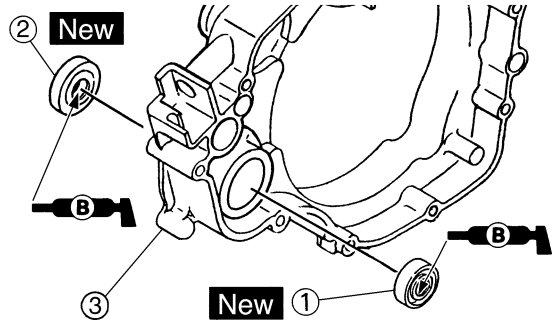

2. Install:
   • Bearing "1"

TIP
Install the bearing by pressing its outer race parallel.

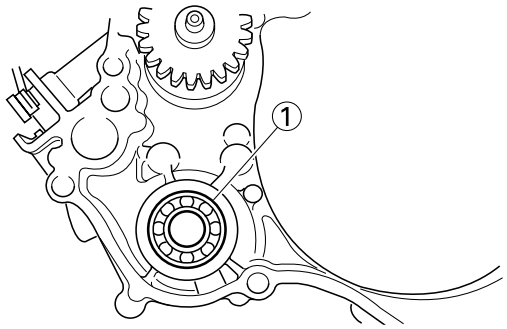

INSTALLING THE IMPELLER SHAFT

1. Install:
   • Impeller shaft "1"

TIP
- Take care so that the oil seal lip is not damaged or the spring does not slip off its position.
- When installing the impeller shaft, apply the lithium soap base grease on the oil seal lip and impeller shaft. And install the shaft while turning it.

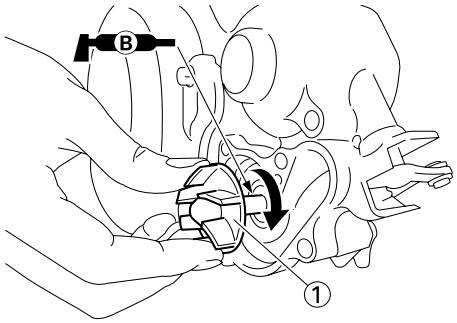

2. Install:
   • Washer "1"
   • Dowel pin "2"
   • Impeller shaft gear "3"
   • Collar "4"
   • Washer "5"
   • Circlip "6" New

TIP
Install the Impeller shaft gear with the dowel pin fitted in the groove "a" in the same gear.

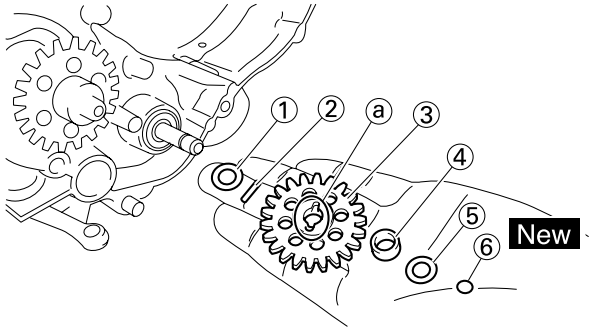

3. Install:
   • Dowel pin "1"
   • Gasket (water pump housing cover) "2" New

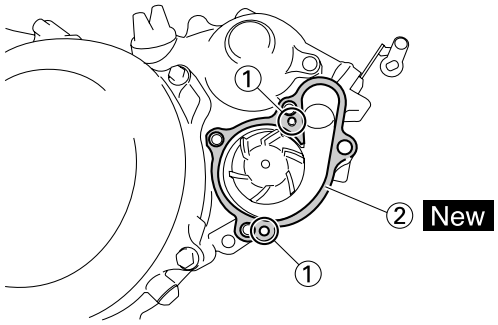

4. Install:
   • Water pump housing cover "1"
   • Bolt (water pump housing cover) "2"

	Bolt (water pump housing cover): 10 Nm (1.0 m•kg, 7.2 ft•lb)

   • Copper washer (coolant drain bolt) "3" New
   • Coolant drain bolt "4"

	Coolant drain bolt: 10 Nm (1.0 m•kg, 7.2 ft•lb)

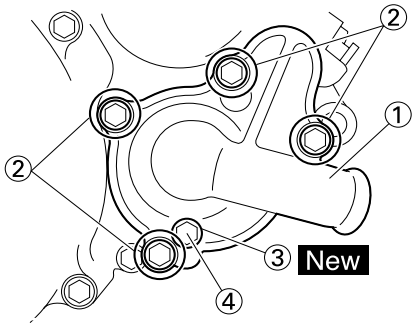

CDI MAGNETO

REMOVING THE CDI MAGNETO

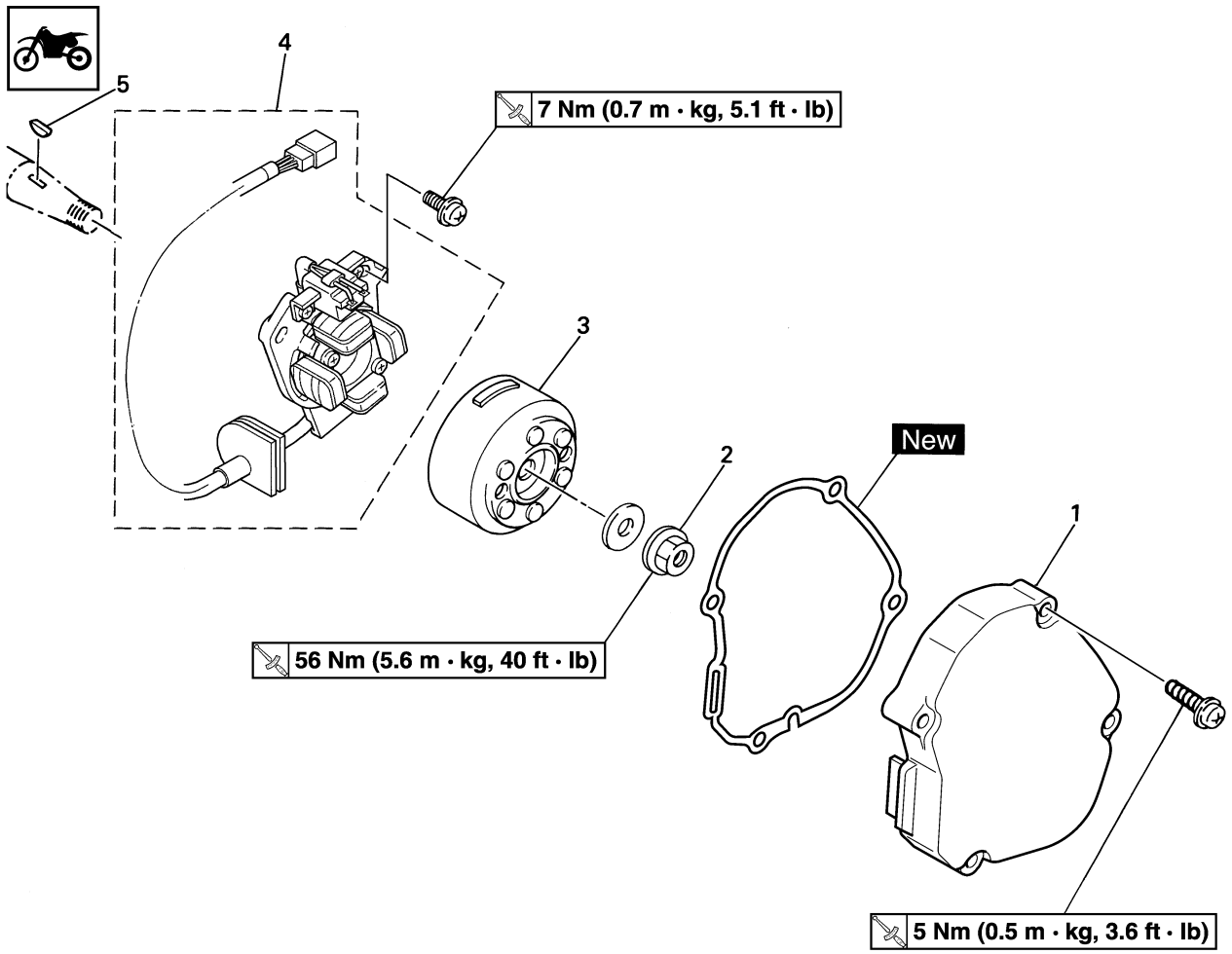

Order	Part name	Q'ty	Remarks
	Seat and fuel tank		Refer to "SEAT, FUEL TANK AND SIDE COVERS" section.
	Bolt (Radiator)		Refer to "RADIATOR" section.
	Disconnect the CDI magneto lead.		
1	Left crankcase cover	1	
2	Nut (rotor)	1	Refer to removal section.
3	Rotor	1	Refer to removal section.
4	Stator	1	
5	Woodruff key	1	

REMOVING THE ROTOR

1. Remove:
   - Nut (rotor) "1"
   - Washer "2"

   Use the rotor holding tool "3".

	Rotor holding tool: **YU-1235/90890-01235**

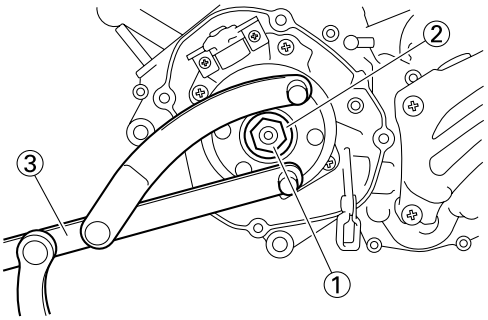

2. Remove:
   - Rotor "1"

   Use the flywheel puller "2".

	Flywheel puller: **YM-1189/90890-01189**

TIP

When installing the flywheel puller, turn it counterclockwise.

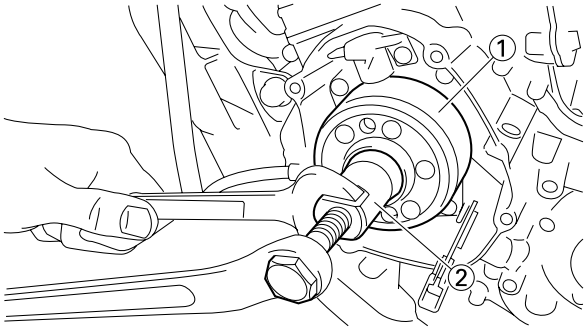

CHECKING THE CDI MAGNETO

1. Inspect:
   - Rotor inner surface "a"
   - Stator outer surface "b"

   Damage→Inspect the crankshaft runout and crankshaft bearing.

   If necessary, replace CDI magneto and/or stator.

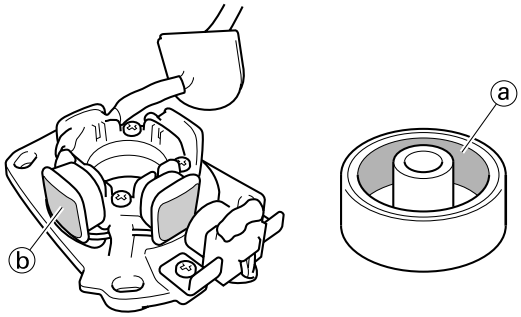

CHECKING THE WOODRUFF KEY

1. Inspect:
   - Woodruff key "1"

   Damage → Replace.

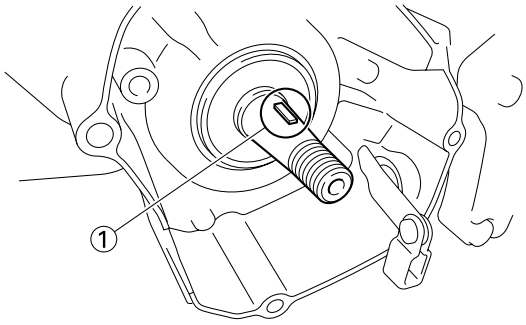

INSTALLING THE CDI MAGNETO

1. Install:
   - Stator "1"
   - Screw (stator) "2"

TIP

Temporarily tighten the screw (stator) at this point.

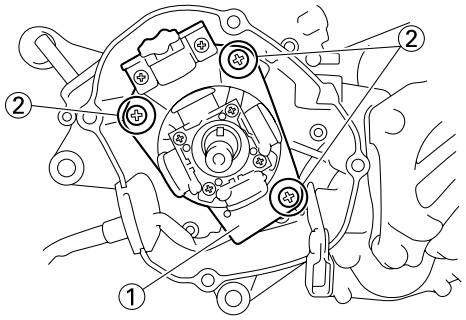

2. Install:
   • Woodruff key "1"
   • Rotor "2"

TIP
- Clean the tapered portions of the crankshaft and rotor.
- When installing the woodruff key, make sure that its flat surface "a" is in parallel with the crankshaft center line "b".
- When installing the rotor, align the keyway "c" of the rotor with the woodruff key.

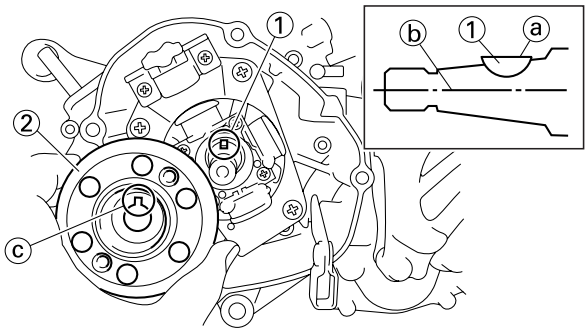

3. Install:
   • Washer "1"
   • Nut (rotor) "2"

	Nut (rotor): **56 Nm (5.6 m•kg, 40 ft•lb)**

Use the rotor holding tool "3".

	Rotor holding tool: **YU-1235/90890-01235**

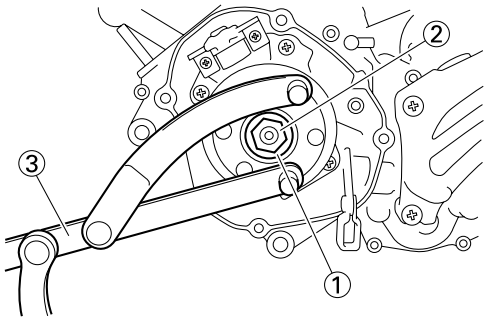

4. Adjust:
   • Ignition timing
   Refer to "CHECKING THE IGNITION TIMING" section in the CHAPTER 3.

	Ignition timing (B.T.D.C): **0.48 mm (0.019 in)**

5. Tighten:
   • Screw (stator) "1"

	Screw (stator): **7 Nm (0.7 m•kg, 5.1 ft•lb)**

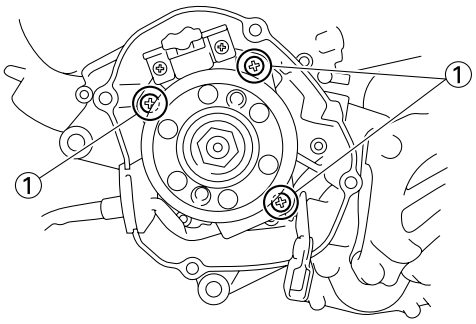

6. Check:
   • Ignition timing
   Re-check the ignition timing.
7. Connect:
   • CDI magneto lead "1"
   Refer to "CABLE ROUTING DIAGRAM" section in the CHAPTER 2.

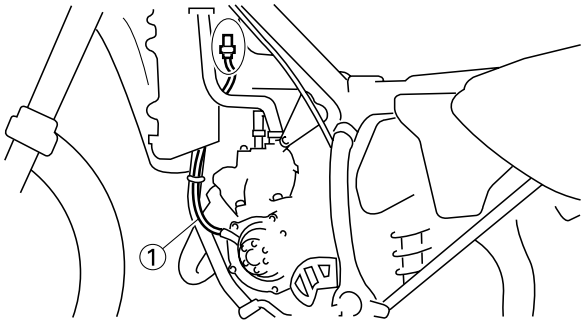

8. Install:
   • Gasket [crankcase cover (left)] New
   • Crankcase cover (left) "1"
   • Screw [crankcase cover (left)] "2"

	Screw [crankcase cover (left)]: **5 Nm (0.5 m•kg, 3.6 ft•lb)**

TIP
Tighten the screws in stage, using a crisscross pattern.

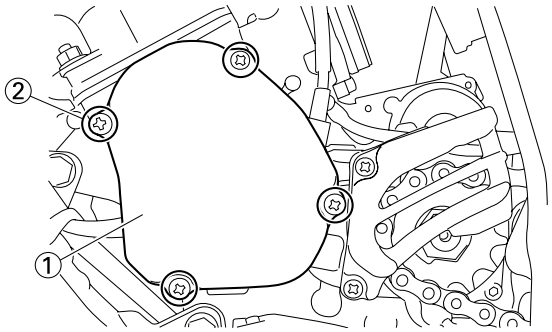

ENGINE REMOVAL

REMOVING THE ENGINE

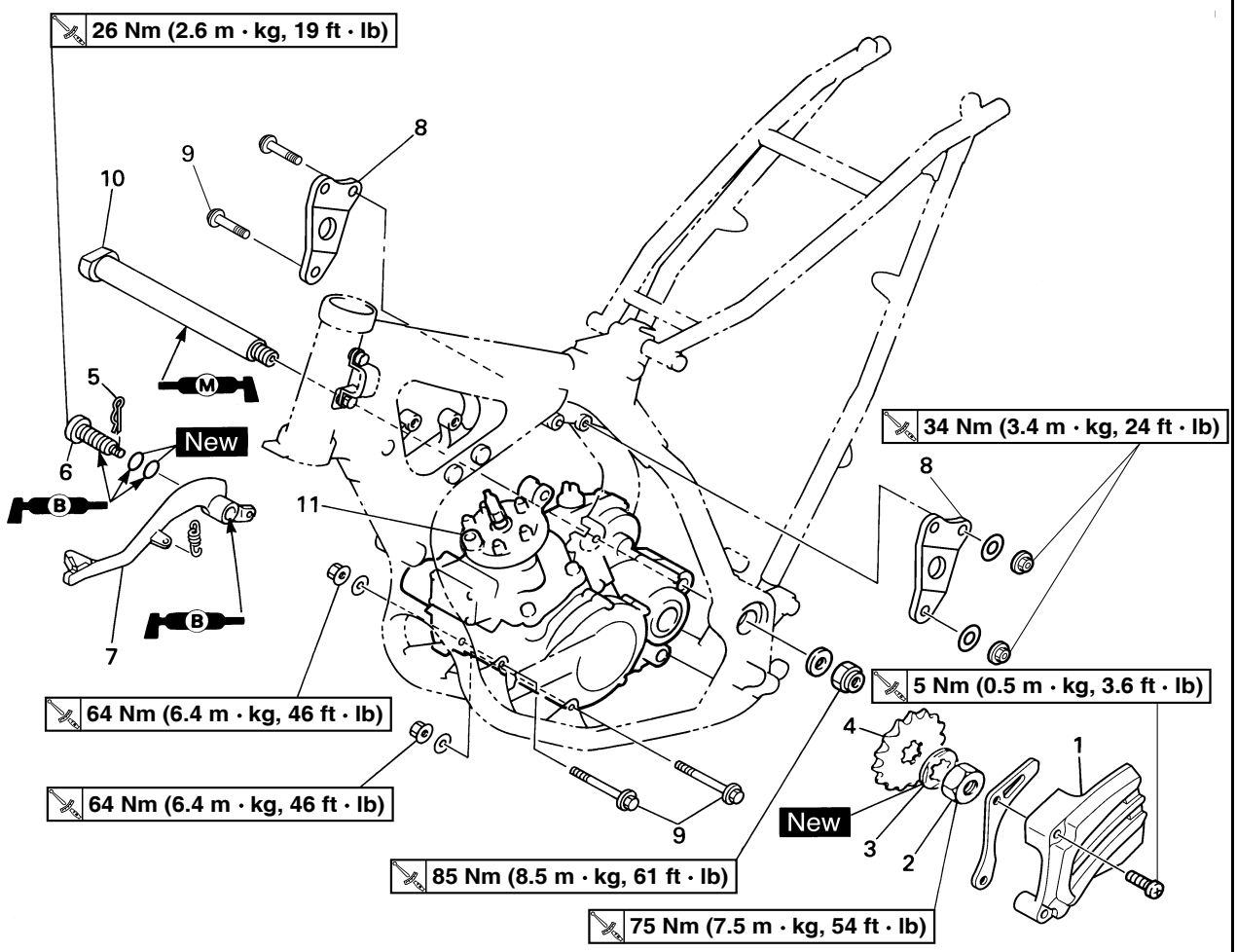

Order	Part name	Q'ty	Remarks
	Hold the machine by placing the suitable stand under the engine.		Refer to "HANDLING NOTE".
	Seat and fuel tank		Refer to "SEAT, FUEL TANK AND SIDE COVERS" section.
	Carburetor		Refer to "CARBURETOR AND REED VALVE" section.
	Exhaust pipe and silencer		Refer to "EXHAUST PIPE AND SILENCER" section.
	Clutch cable		Disconnect at the engine side.
	Radiator		Refer to "RADIATOR" section.
	Spark plug cap		
	Disconnect the CDI magneto lead.		
1	Drive chain sprocket cover	1	
2	Nut (drive sprocket)	1	Refer to removal section.
3	Lock washer	1	Refer to removal section.

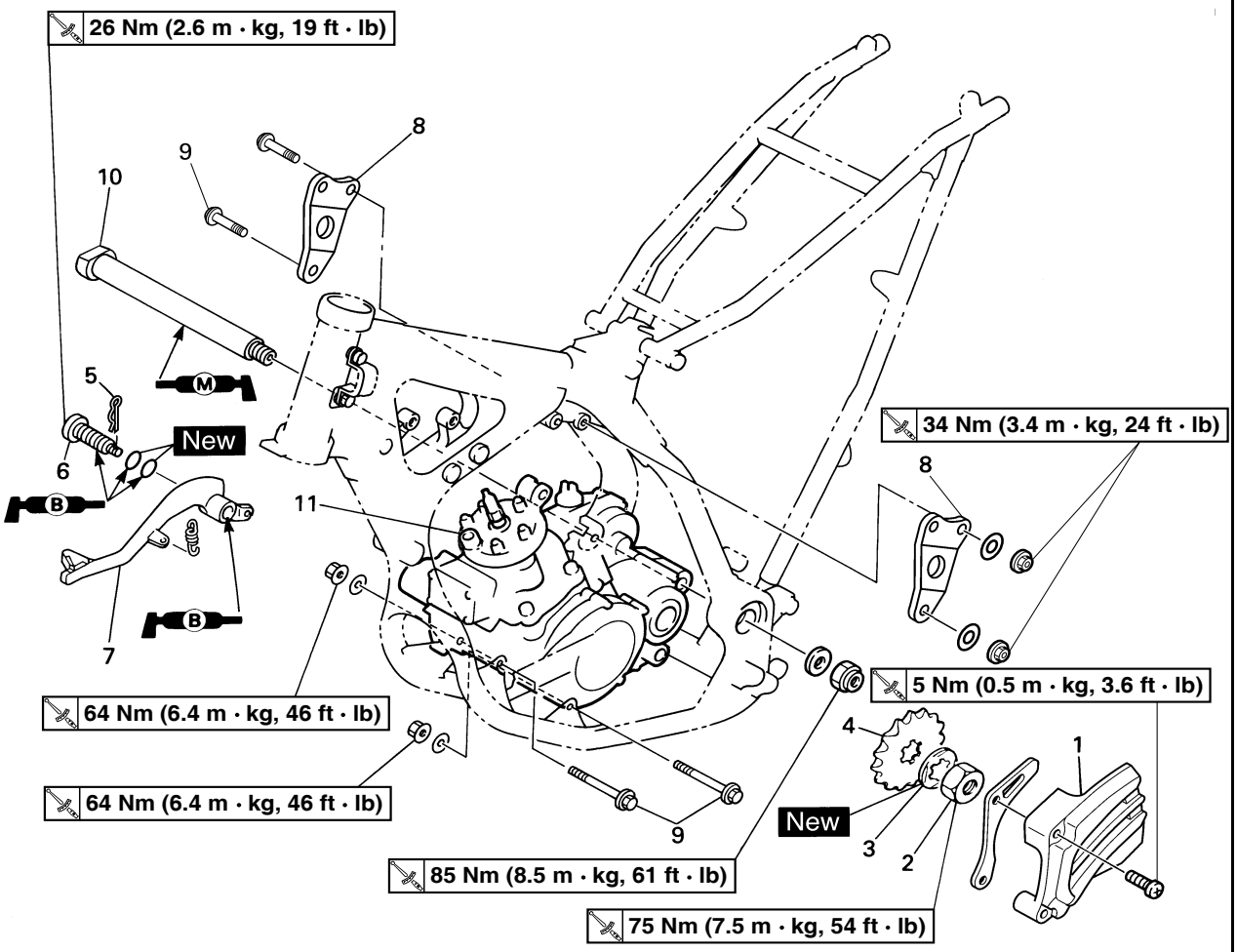

Order	Part name	Q'ty	Remarks
4	Drive sprocket	1	Refer to removal section.
5	Clip	1	
6	Bolt (brake pedal)	1	
7	Brake pedal	1	
8	Engine bracket	2	
9	Engine mounting bolt	3	
10	Pivot shaft	1	Refer to removal section.
11	Engine	1	Refer to removal section.

HANDLING NOTE

⚠ WARNING

Support the machine securely so there is no danger of it falling over.

REMOVING THE DRIVE SPROCKET

1. Remove:
   - Nut (drive sprocket) "1"
   - Lock washer "2"

TIP

- Straighten the lock washer tab.
- Loosen the nut while applying the rear brake.

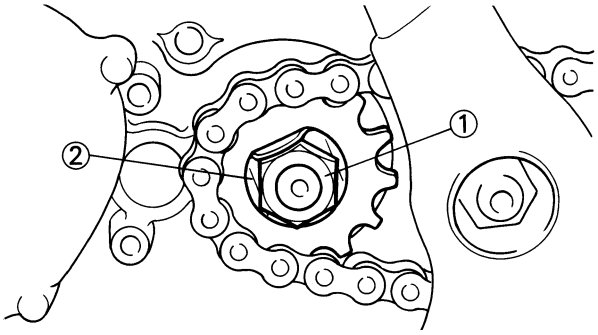

2. Remove:
   - Drive sprocket "1"
   - Drive chain "2"

TIP

Remove the drive sprocket together with the drive chain.

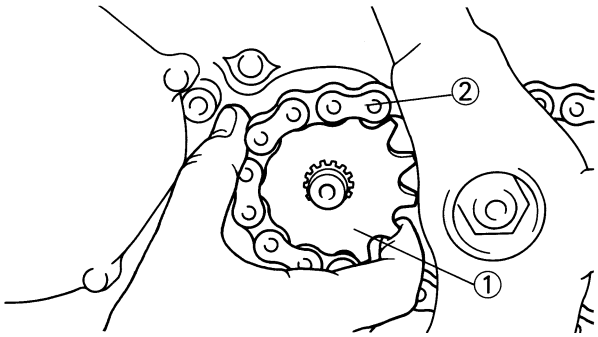

REMOVING THE ENGINE

1. Remove:
   - Pivot shaft "1"

TIP

If the pivot shaft is pulled all the way out, the swingarm will come loose. If possible, insert a shaft of similar diameter into the other side of the swingarm to support it.

TIP

Apply the molybdenum disulfide grease on the pivot shaft.

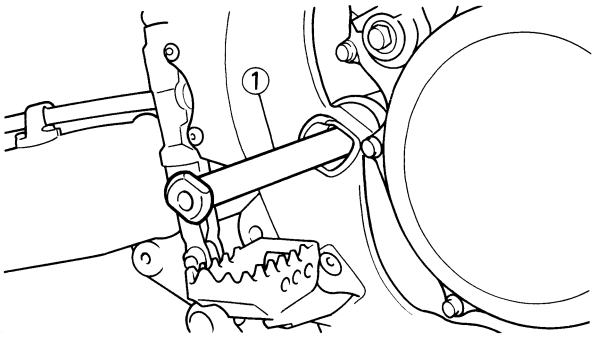

2. Remove:
   - Engine "1"
     From right side.

TIP

Make sure that the couplers, hoses and cables are disconnected.

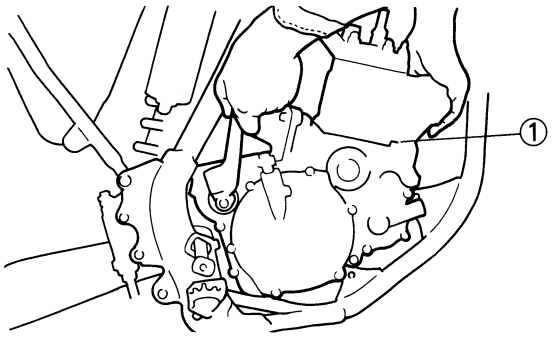

INSTALLING THE ENGINE

1. Install:
   - Engine "1"
     Install the engine from right side.
   - Pivot shaft "2"

	Pivot shaft: **85 Nm (8.5 m•kg, 61 ft•lb)**

   - Engine mounting bolt (lower) "3"

	Engine mounting bolt (lower): **64Nm (6.4 m•kg, 46 ft•lb)**

   - Engine mounting bolt (front) "4"

	Engine mounting bolt (front): **64 Nm (6.4 m•kg, 46 ft•lb)**

   - Engine bracket "5"
   - Bolt (engine bracket) "6"

	Bolt (engine bracket): **34 Nm (3.4 m•kg, 24 ft•lb)**

   - Engine mounting bolt (upper) "7"

	Engine mounting bolt (upper): **34 Nm (3.4 m•kg, 24 ft•lb)**

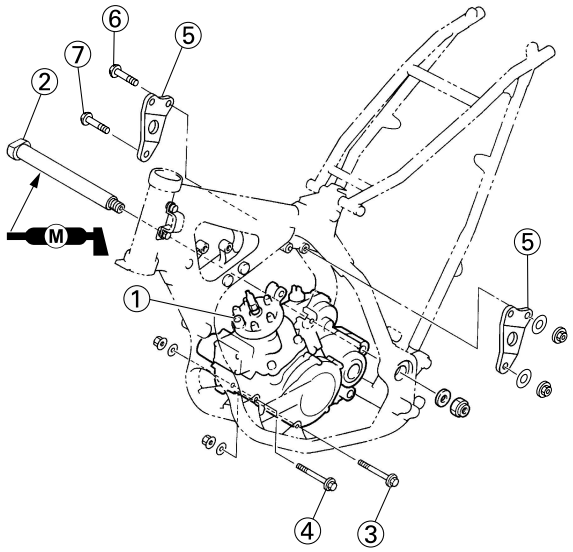

INSTALLING THE BRAKE PEDAL

1. Install:
   - Spring "1"
   - Brake pedal "2"
   - O-ring "3" New
   - Bolt (brake pedal) "4"

	Bolt (brake pedal): **26 Nm (2.6 m•kg, 19 ft•lb)**

   - Clip "5"

TIP

Apply the lithium soap base grease on the bolt, O-rings and brake pedal bracket.

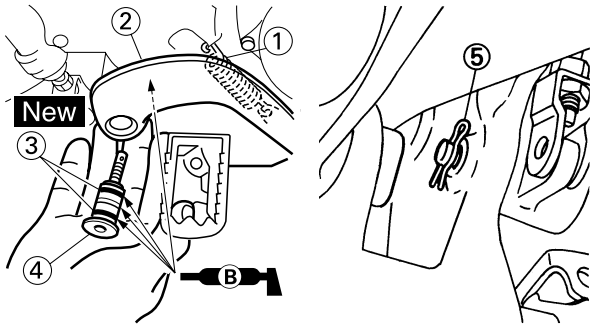

INSTALLING THE DRIVE SPROCKET

1. Install:
   - Drive sprocket "1"
   - Drive chain "2"

TIP

Install the drive sprocket together with the drive chain.

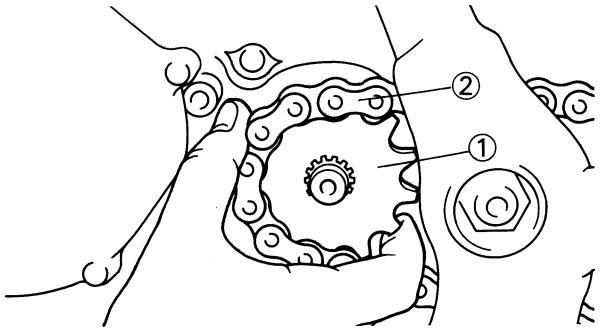

2. Install:
   - Lock washer "1" New
   - Nut (drive sprocket) "2"

	Nut (drive sprocket): **75 Nm (7.5 m•kg, 54 ft•lb)**

TIP

Tighten the nut while applying the rear brake.

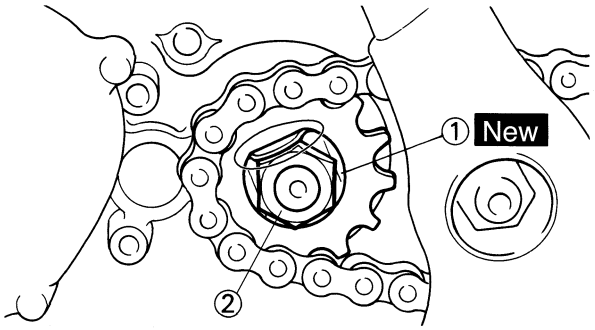

3. Bend the lock washer tab to lock the nut.
4. Install:
   - Drive chain sprocket guide "1"
   - Drive chain sprocket cover "2"
   - Screw (drive chain sprocket cover) "3"

	Screw (drive chain sprocket cover): **5 Nm (0.5 m•kg, 3.6 ft•lb)**

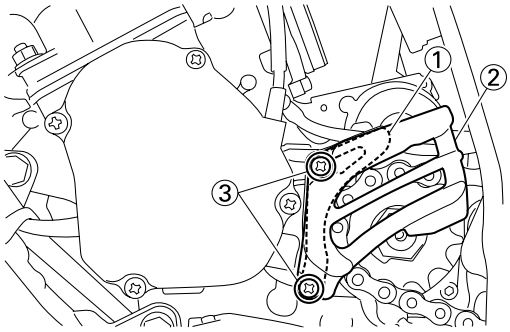

CRANKCASE AND CRANKSHAFT

REMOVING THE CRANKSHAFT

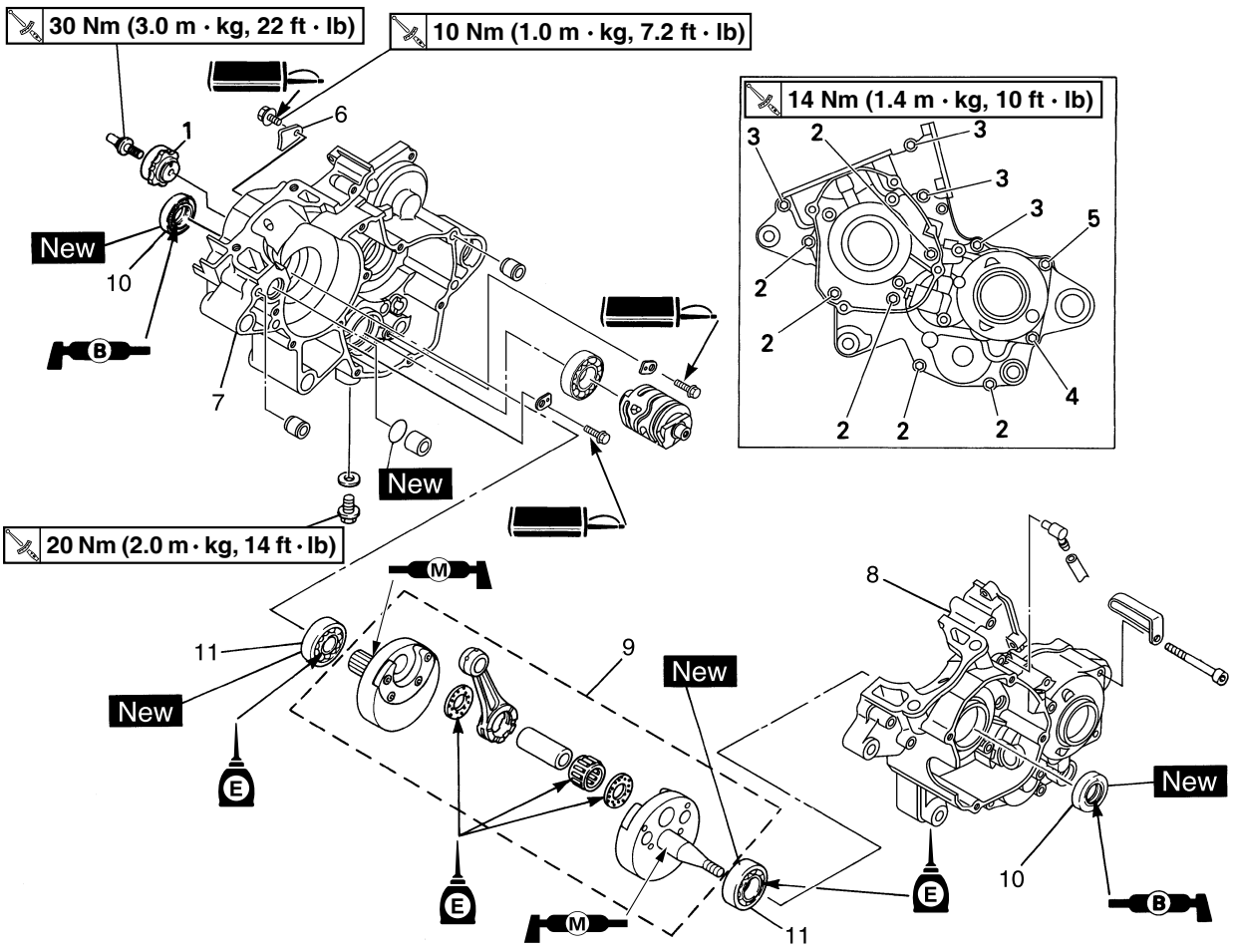

Order	Part name	Q'ty	Remarks
	Engine		Refer to "ENGINE REMOVAL" section.
	Piston		Refer to "CYLINDER HEAD, CYLINDER AND PISTON" section.
	Primary drive gear		Refer to "KICK SHAFT AND SHIFT SHAFT" section.
	Kick idle gear		Refer to "KICK SHAFT AND SHIFT SHAFT" section.
	Stopper lever		Refer to "KICK SHAFT AND SHIFT SHAFT" section.
	Rotor and stator		Refer to "CDI MAGNETO" section.
1	Segment	1	Refer to removal section.
2	Bolt [L=45 mm (1.77 in)]	6	
3	Bolt [L=55 mm (2.17 in)]	4	
4	Bolt [L=65 mm (2.56 in)]	1	

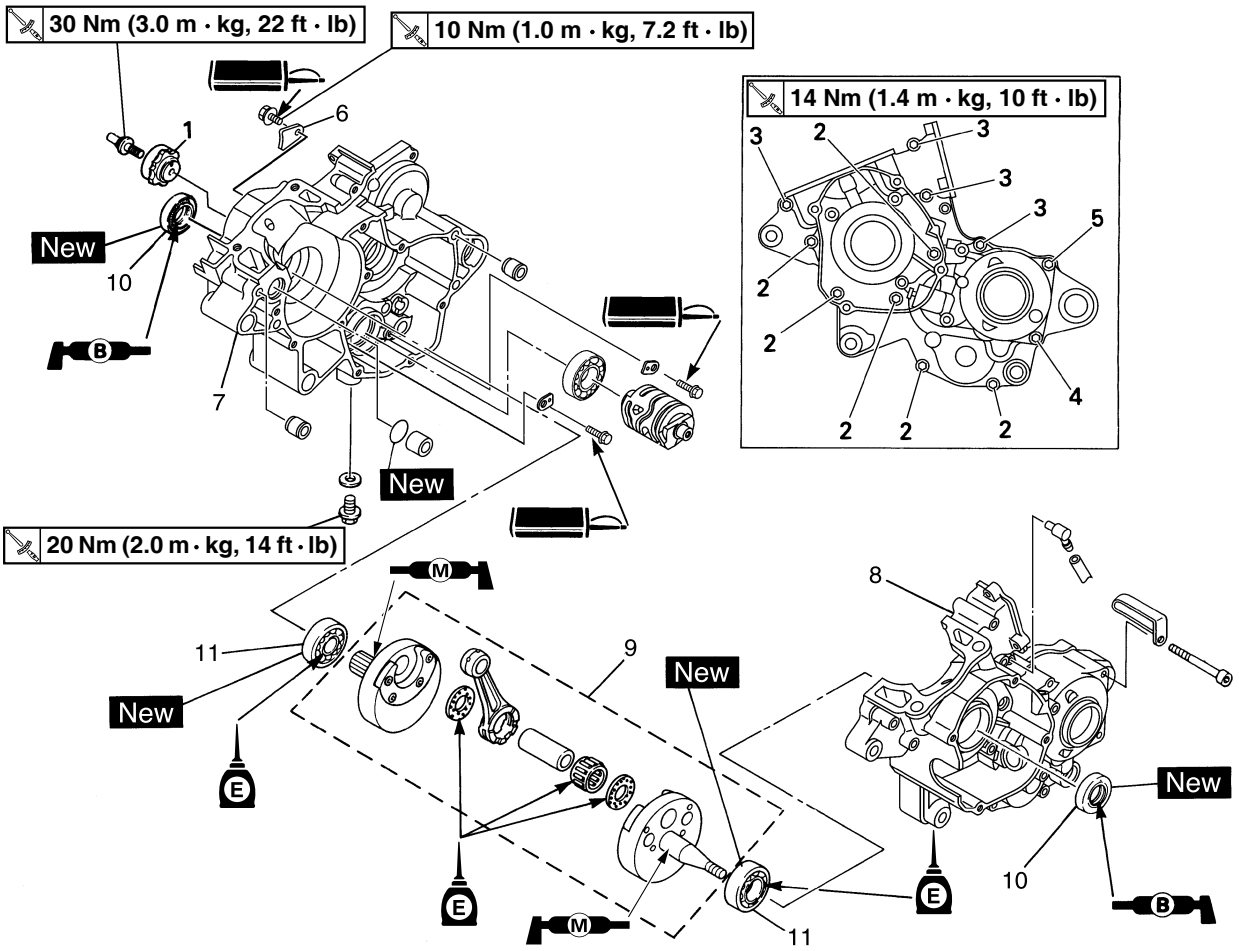

Order	Part name	Q'ty	Remarks
5	Bolt [L=75 mm (2.95 in)]	1	
6	Holder	1	
7	Crankcase (right)	1	Refer to removal section.
8	Crankcase (left)	1	Refer to removal section.
9	Crankshaft	1	Refer to removal section.
10	Oil seal	2	
11	Bearing	2	Refer to removal section.

REMOVING THE SEGMENT

1. Remove:
   • Bolt (segment) "1"
   • Segment "2"

TIP

Turn the segment counterclockwise until it stops and loosen the bolt.

NOTICE

If the segment gets an impact, it may be damaged. Take care not to give an impact to the segment when removing the bolt.

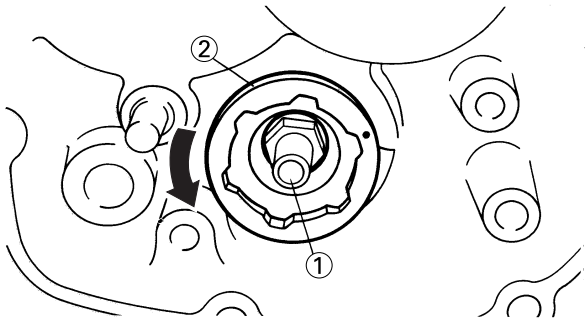

DISASSEMBLING THE CRANKCASE

1. Remove:
   • Crankcase (right) "1"
   Use the flywheel puller "2".

	Flywheel puller: **YU-1362-A/90890-01362**

TIP

- Make appropriate bolts "3" as shown available by yourself and attach the tool with them.
- Fully tighten the tool holding bolts, but make sure the tool body is parallel with the case. If necessary, one screw may be backed out slightly to level tool body.
- As pressure is applied, alternately tap on the engine mounting boss and transmission shafts.

NOTICE

Use soft hammer to tap on the case half. Tap only on reinforced portions of case. Do not tap on gasket mating surface. Work slowly and carefully. Make sure the case halves separate evenly. If one end "hangs up", take pressure off the push screw, realign, and start over. If the cases do not separate, check for a remaining case bolt or fitting. Do not force.

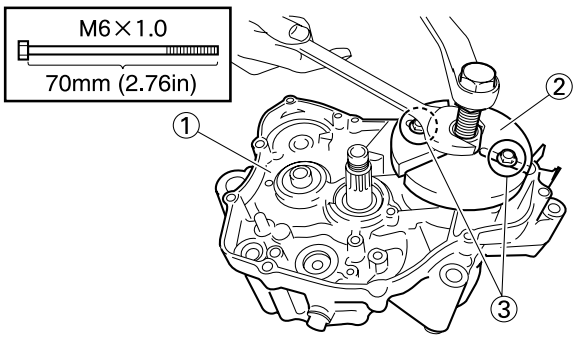

REMOVING THE CRANKSHAFT

1. Remove:
   • Crankshaft "1"
   Use the crankcase separating tool "2".

	Crankcase separating tool: **YU-1135-A/90890-01135**

TIP

Make appropriate bolts "3" as shown available by yourself and attach the tool with them.

NOTICE

Do not use a hammer to drive out the crankshaft.

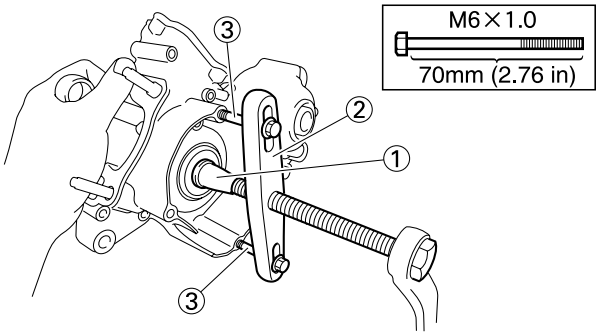

REMOVING THE CRANKCASE BEARING

1. Remove:
   • Bearing "1"

TIP

- Remove the bearing from the crankcase by pressing its inner race as shown in "A".
- If the bearing is removed together with the crankshaft, remove the bearing using a general bearing puller "2" as shown in "B".
- Do not use the removed bearing.

A

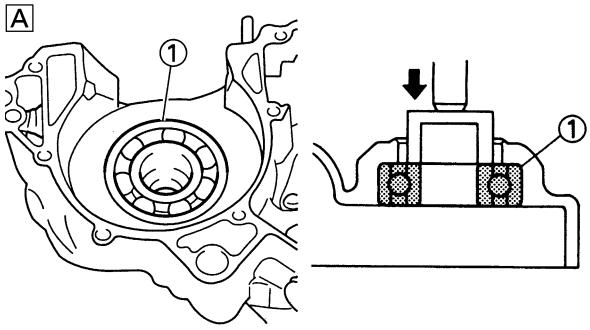

B

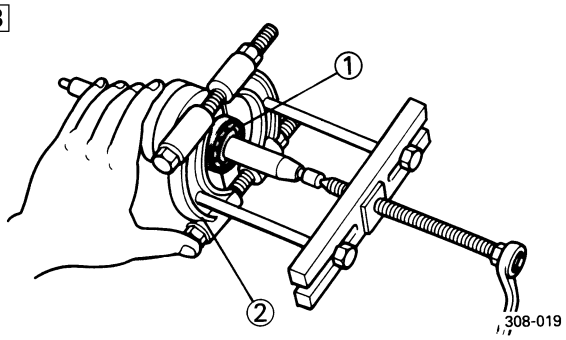

CHECKING THE CRANKCASE

1. Inspect:
   - Contacting surface "a"
     Scratches → Replace.
   - Engine mounting boss "b", crankcase
     Cracks/damage → Replace.

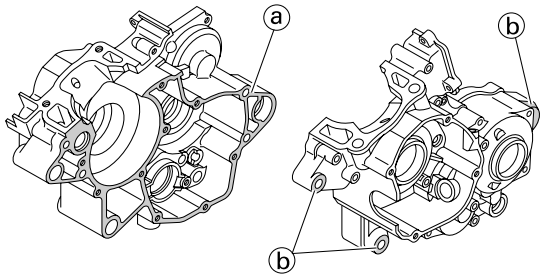

2. Inspect:
   - Bearing "1"
     Rotate inner race with a finger.
     Rough spot/seizure → Replace.

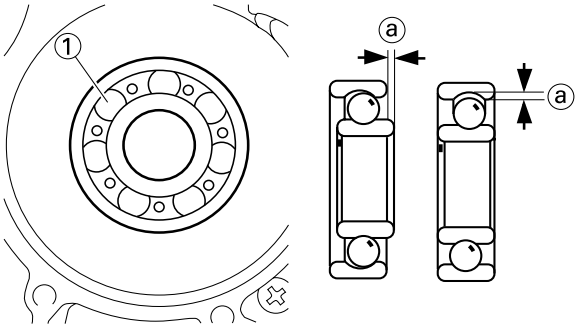

3. Inspect:
   - Oil seal "1"
     Damage → Replace.

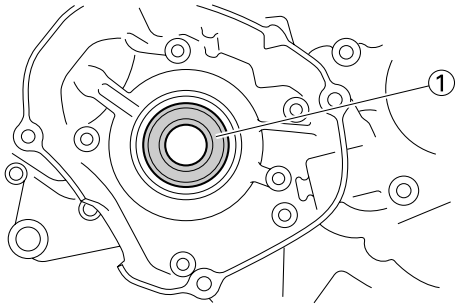

CHECKING THE CRANKSHAFT

1. Measure:
   - Runout limit "a"
   - Small end free play limit "b"
   - Connecting rod big end side clearance "c"
   - Crank width "d"
     Out of specification → Replace.
     Use the dial gauge and a thickness gauge.

	Dial gauge and stand: YU-3097/90890-01252

		Standard	**<Limit>**
	Runout limit:	**0.03 mm (0.0012 in)**	**0.05 mm (0.002 in)**
	Small end free play:	**0.8–1.0 mm (0.031–0.039 in)**	**2.0 mm (0.08 in)**
	Side clearance:	**0.06–0.64 mm (0.002–0.025 in)**	**—**
	Crack width:	**55.90–55.95 mm (2.201–2.203 in)**	**—**

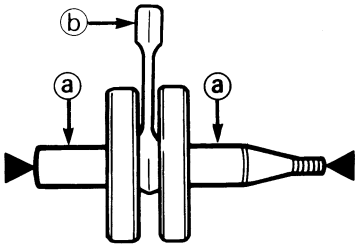

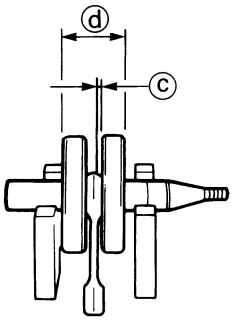

INSTALLING THE CRANKCASE BEARING

1. Install:
   • Bearing "1" New
     To left and right crankcase.

TIP

Install the bearing by pressing its outer race parallel.

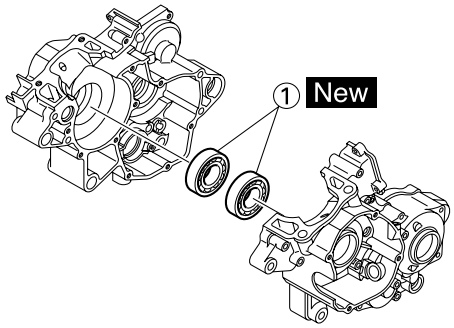

INSTALLING THE OIL SEAL

1. Install:
   • Oil seal (left) "1" New
   • Oil seal (right) "2" New

TIP

- Apply the lithium soap base grease on the oil seal lip.
- Install the oil seal with its manufacture's marks or numbers facing outward.

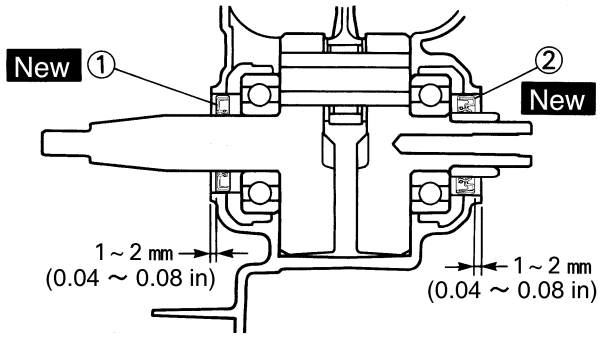

INSTALLING THE CRANKSHAFT

1. Install:
   • Crankshaft "1"
     Use the crankshaft installing tool "2", "3", "4".

	Crankshaft installing pot "2": YU-90050/90890-01274 **Crankshaft installing bolt "3": YU-90050/90890-01275** **Adapter "4": YU-90063/90890-01278**

TIP

- Hold the connecting rod at top dead center with one hand while turning the nut of the installing tool with the other. Operate the installing tool until the crankshaft bottoms against the bearing.
- Before installing the crankshaft, clean the contacting surface of crankcase.
- Apply molybdenum disulfide grease to the surface "a" where the crankshaft and bearing come in contact.
- Apply the lithium soap base grease on the oil seal lip.

NOTICE

Do not use a hammer to drive in the crankshaft.

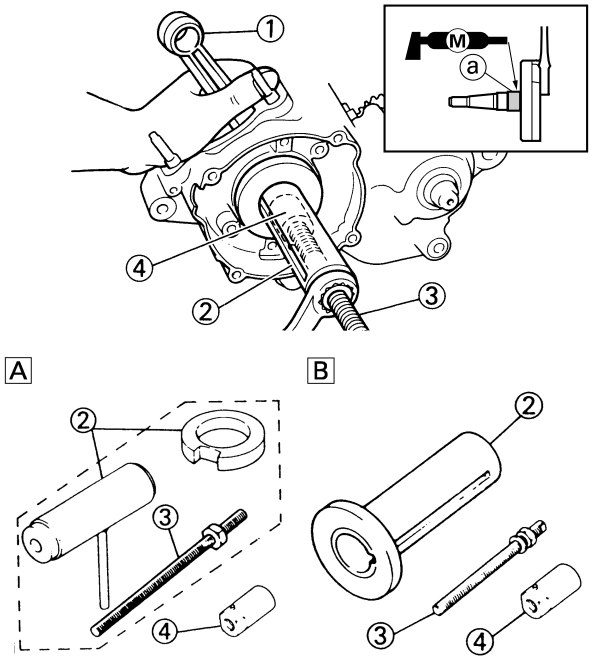

A. For USA and CDN
B. Except for USA and CDN

2. Check:
   • Shifter operation
   • Transmission operation
   Unsmooth operation → Repair.

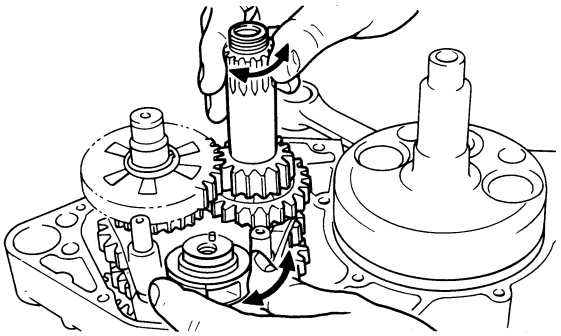

3. Apply:
   • Sealant
   On the right crankcase "1".

	YAMAHA Bond No.1215 (ThreeBond® No.1215): 90890-85505

TIP
Clean the contacting surface of left and right crankcase before applying the sealant.

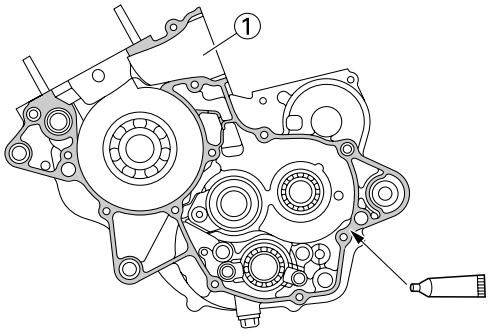

4. Install:
   • Dowel pin "1"
   • O-ring "2" New

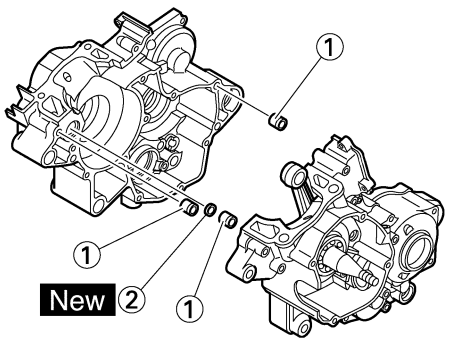

5. Install:
   • Right crankcase "1"
   Use the crankshaft installing tool "2", "3", "4".

	Crankshaft installing pot "2": YU-90050/90890-01274 **Crankshaft installing bolt "3": YU-90050/90890-01275** **Adapter "4": YM-01499/90890-01499**

TIP
- Apply molybdenum disulfide grease to the surface "a" where the crankshaft and bearing come in contact.
- Use two plain washers (Yamaha genuine: 90201-243K3) "5" or the ones of a size as shown one on the other. (Except for USA and CDN)
- Install so that the plain washers do not deviate from the crankshaft center. (Except for USA and CDN)
- When installing the crankcase, the connecting rod should be positioned at TDC (top dead center).
- Install while checking that the dowel pin is in place.

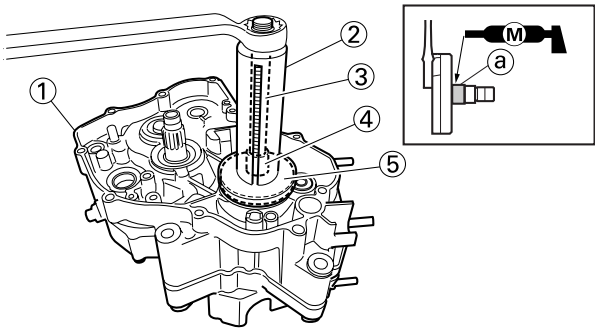

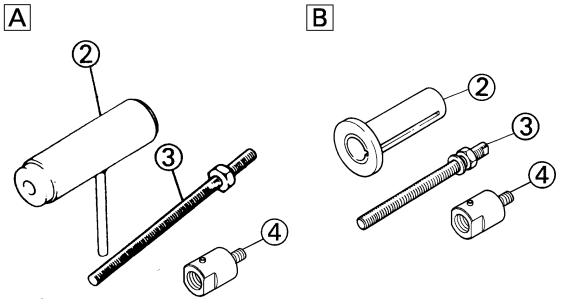

B

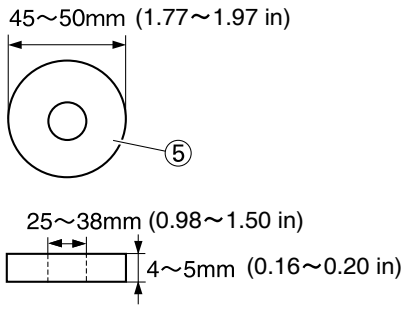

A. For USA and CDN
B. Except for USA and CDN

6. Install:
   • Clamp "1"
   • Bolt (crankcase) "2"

	Bolt (crankcase): **14 Nm (1.4 m•kg, 10 ft•lb)**

TIP
Tighten the crankcase tightening bolts in stage, using a crisscross pattern.

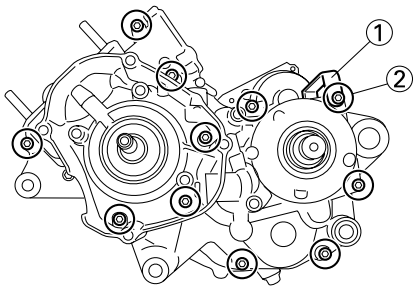

7. Install:
   • Holder "1"
   • Bolt (holder) "2"

	Bolt (holder): **10 Nm (1.0 m•kg, 7.2 ft•lb)**

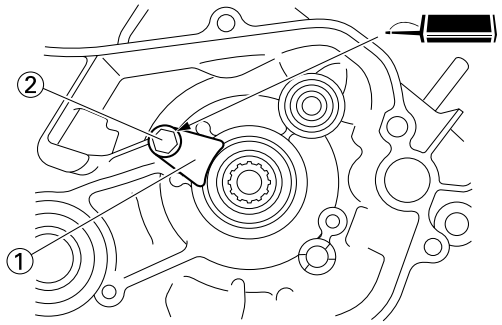

8. Install:
   • Segment "1"
   • Bolt (segment) "2"

	Bolt (segment): **30 Nm (3.0 m•kg, 22 ft•lb)**

TIP
• When installing the segment onto the shift cam "3", align the punch mark "a" with the dowel pin "b".
• Turn the segment clockwise until it stops and tighten the bolt.

NOTICE
If the segment gets an impact, it may be damaged. Take care not to give an impact to the segment when tightening the bolt.

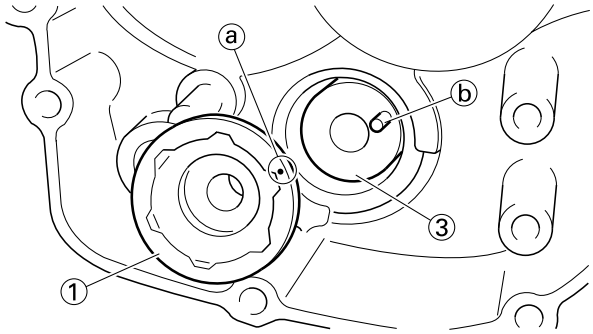

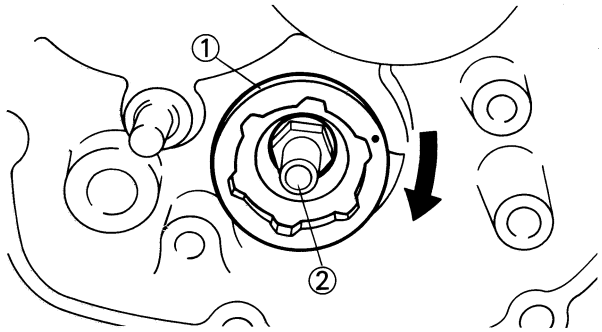

9. Remove:
   • Sealant
     Forced out on the cylinder mating surface.
10. Apply:
   • Engine oil
     To the crank pin, bearing, oil delivery hole and connecting rod big end washer.
11. Check:
   • Crankshaft and transmission operation.
     Unsmooth operation → Repair.

TIP
If the crankshaft will not turn smoothly, make an adjustment by gently tapping its right end with a soft hammer.

TRANSMISSION, SHIFT CAM AND SHIFT FORK

REMOVING THE TRANSMISSION, SHIFT CAM AND SHIFT FORK

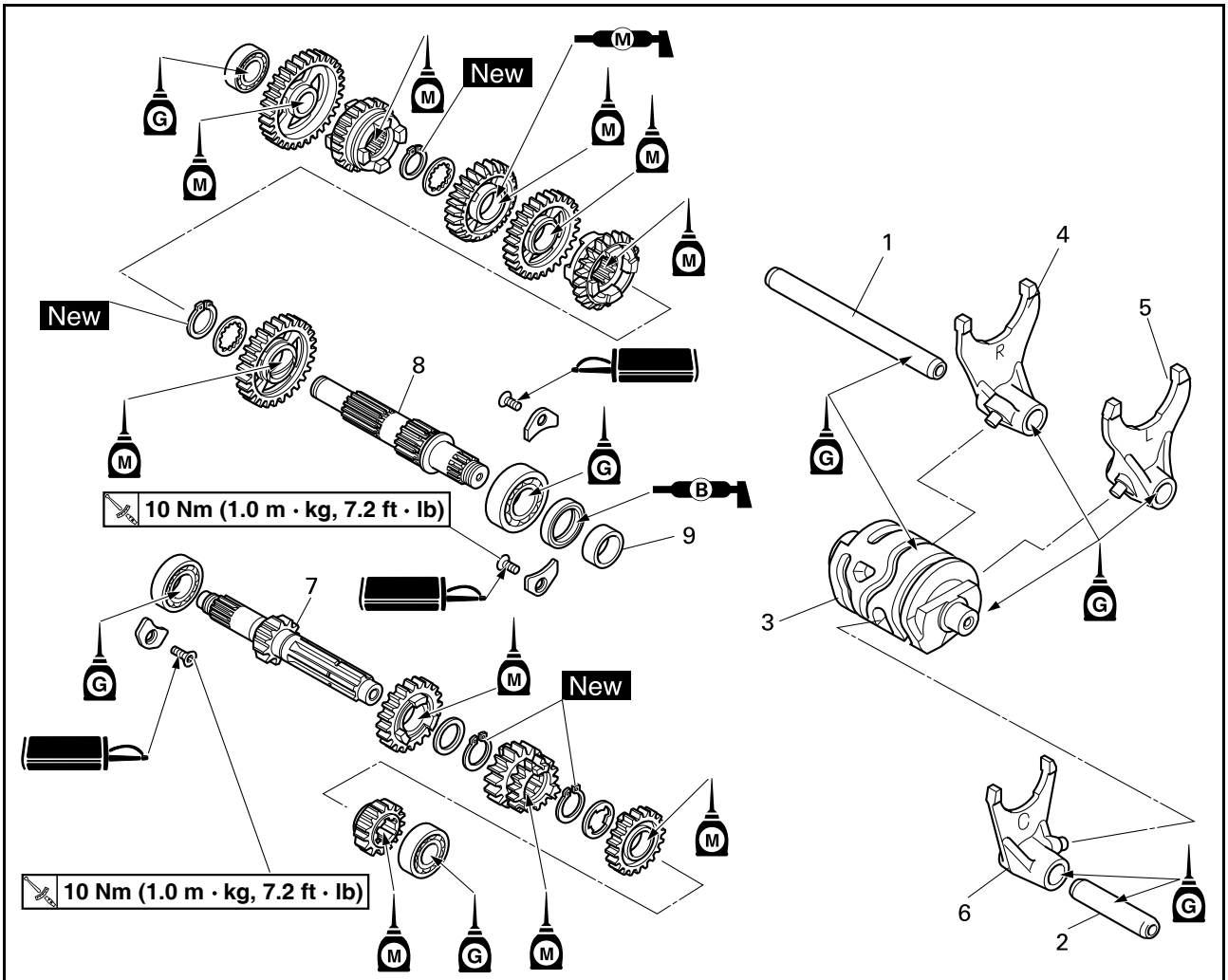

Order	Part name	Q'ty	Remarks
	Engine		Refer to "ENGINE REMOVAL" section.
	Separate the crankcase.		Refer to "CRANKCASE AND CRANKSHAFT" section.
1	Guide bar (long)	1	
2	Guide bar (short)	1	
3	Shift cam	1	
4	Shift fork 3	1	
5	Shift fork 1	1	
6	Shift fork 2	1	
7	Main axle	1	Refer to removal section.
8	Drive axle	1	Refer to removal section.
9	Collar	1	

REMOVING THE TRANSMISSION

1. Remove:
   - Main axle "1"
   - Drive axle "2"

TIP

- Tap lightly on the transmission drive axle with a soft hammer to remove.
- Remove assembly carefully. Note the position of each part. Pay particular attention to the location and direction of shift forks.

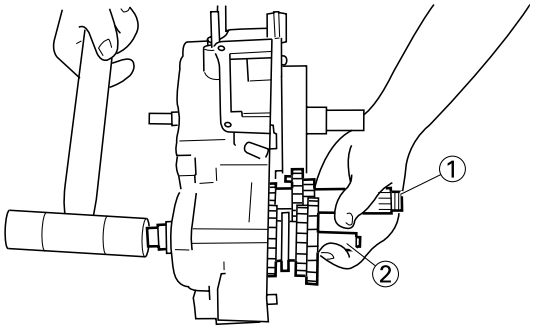

CHECKING THE GEARS

1. Inspect:
   - Matching dog "a"
   - Gear teeth "b"
   - Shift fork groove "c"
   Wear/damage → Replace.

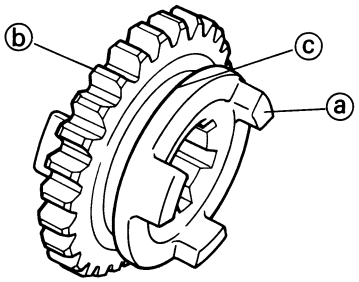

2. Check:
   - Gears movement
   Unsmooth movement → Repair or replace.

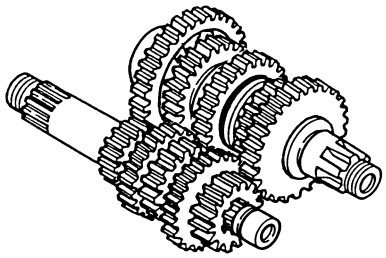

CHECKING THE BEARING

1. Inspect:
   - Bearing "1"
   Rotate inner race with a finger.
   Rough spot/seizure → Replace.

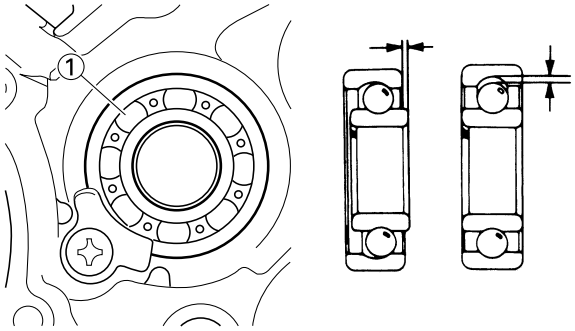

CHECKING THE SHIFT FORK, SHIFT CAM AND SEGMENT

1. Inspect:
   - Shift fork "1"
   Wear/damage/scratches → Replace.

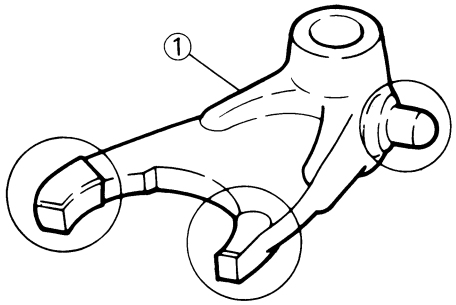

2. Inspect:
   - Shift cam "1"
   - Segment "2"
   - Guide bar "3"
   Wear/damage → Replace.

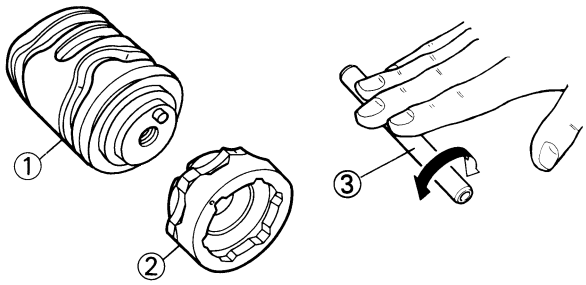

3. Check:
   • Shift fork movement
     On its guide bar.
     Unsmooth operation → Replace shift fork and/or guide bar.

TIP
For a malfunctioning shift fork, replace not only the shift fork itself but the two gears each adjacent to the shift fork.

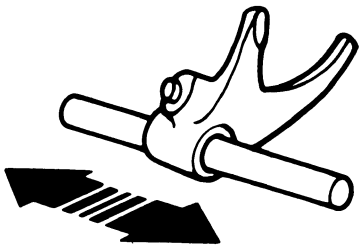

INSTALLING THE TRANSMISSION
1. Install:
   • 6th pinion gear (21T) "1"
   • 3rd/4th pinion gear (17T/17T) "2"
   • 5th pinion gear (20T) "3"
   • 2nd pinion gear (15T) "4"
     To main axle "5".

TIP
Apply the molybdenum disulfide oil on the inner and end surface of the idler gear and on the inner surface of the sliding gear, then install.

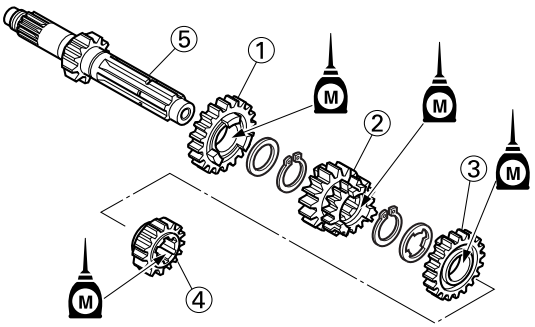

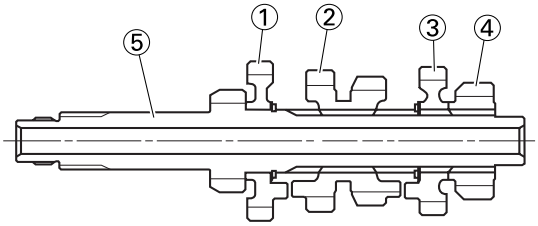

2. Install:
   • 2nd wheel gear (29T) "1"
   • 5th wheel gear (24T) "2"
   • 3rd wheel gear (27T) "3"
   • 4th wheel gear (23T) "4"
   • 6th wheel gear (23T) "5"
   • 1st wheel gear (31T) "6"
     To drive axle "7".

TIP
• Apply the molybdenum disulfide oil on the inner and end surface of the idler gear and on the inner surface of the sliding gear, then install.
• Apply the molybdenum disulfide grease on the inner surface of the 4th wheel gear, then install.

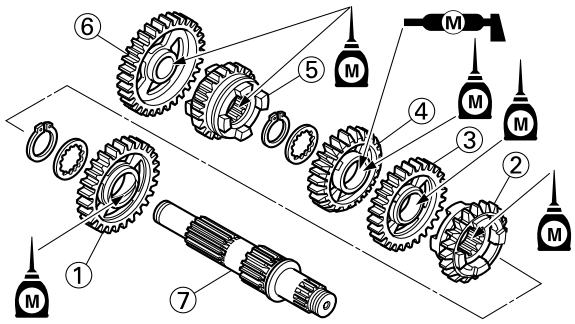

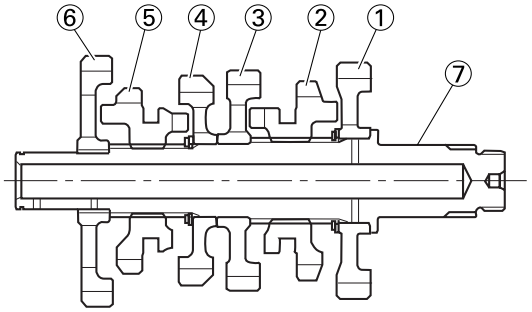

3. Install:
   • Washer "1"
   • Circlip "2" New

TIP
• Be sure the circlip sharp-edged corner "a" is positioned opposite side to the washer and gear "b".
• Be sure the circlip end "c" is positioned at axle spline groove "d".

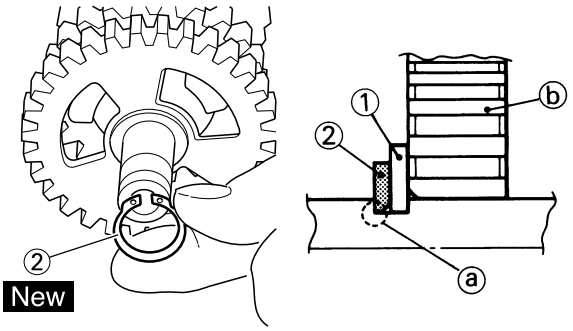

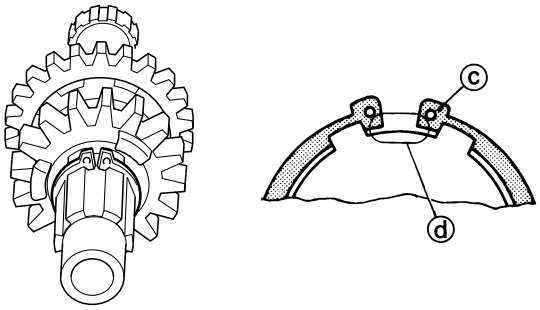

4. Install:
   • Collar "1"

TIP
- Apply the lithium soap base grease on the oil seal lip.
- When installing the collar into the crankcase, pay careful attention to the crankcase oil seal lip.

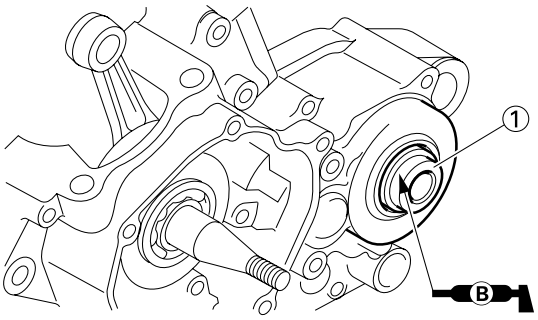

5. Install:
   • Main axle "1"
   • Drive axle "2"

TIP
Apply the transmission oil on the crankcase bearing.

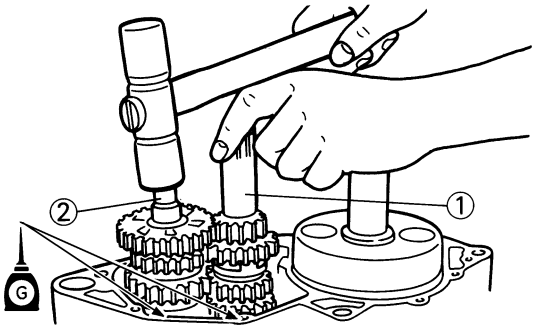

INSTALLING THE SHIFT CAM AND SHIFT FORK

1. Install:
   • Shift fork 1 (L) "1"
   • Shift fork 2 (C) "2"
   • Shift fork 3 (R) "3"

TIP
- Mesh the shift fork #1 (L) with the 5th wheel gear "4" and #3 (R) with the 6th wheel gear "6" on the drive axle.
- Mesh the shift fork #2 (C) with the 3rd/4th pinion gear "5" on the main axle.

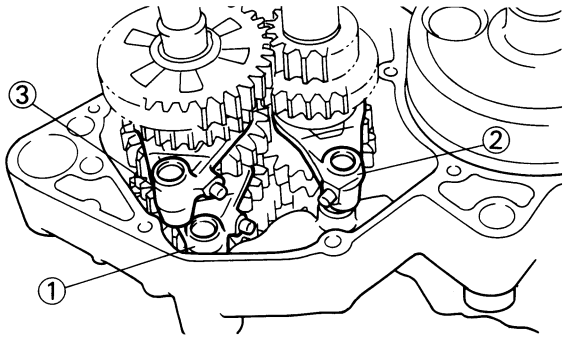

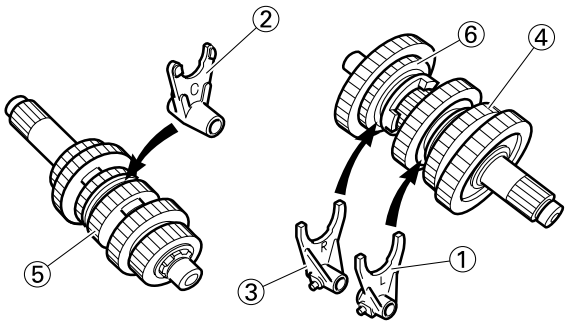

2. Install:
   • Shift cam "1"

TIP
- Apply the transmission oil on the shift cam.
- Install the shift cam while holding up the 5th wheel gear "2" and keeping the shift fork #1 "3" moved in the direction of the arrow.

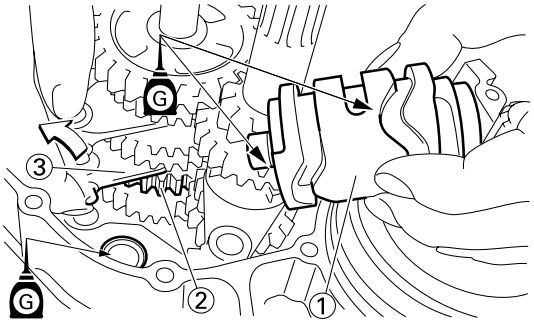

3. Install:
   • Guide bar (short) "1"
   • Guide bar (long) "2"

TIP
- Apply the transmission oil on the guide bars.
- Be sure the long bar is inserted into the shift forks #1 and #3 and the short one into #2.

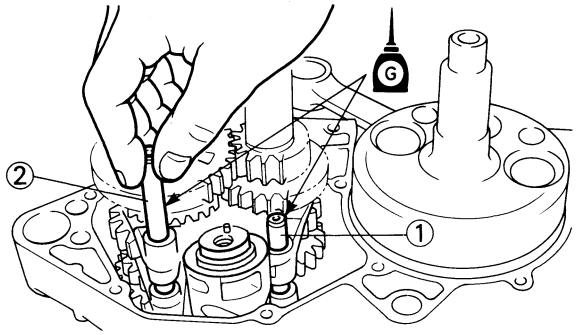

4. Check:
   • Shifter operation
   • Transmission operation
   Unsmooth operation → Repair.

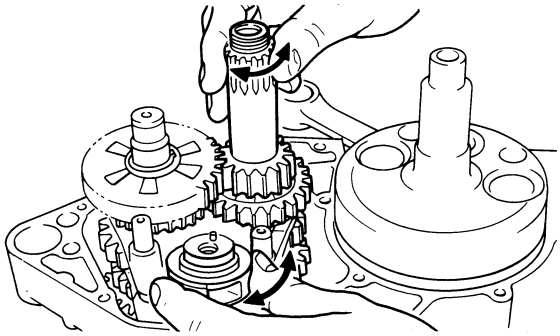

CHASSIS

TIP

This section is intended for those who have basic knowledge and skill concerning the servicing of Yamaha motorcycles (e.g., Yamaha dealers, service engineers, etc.) Those who have little knowledge and skill concerning servicing are requested not to undertake inspection, adjustment, disassembly, or reassembly only by reference to this manual. It may lead to servicing trouble and mechanical damage.

FRONT WHEEL AND REAR WHEEL

REMOVING THE FRONT WHEEL

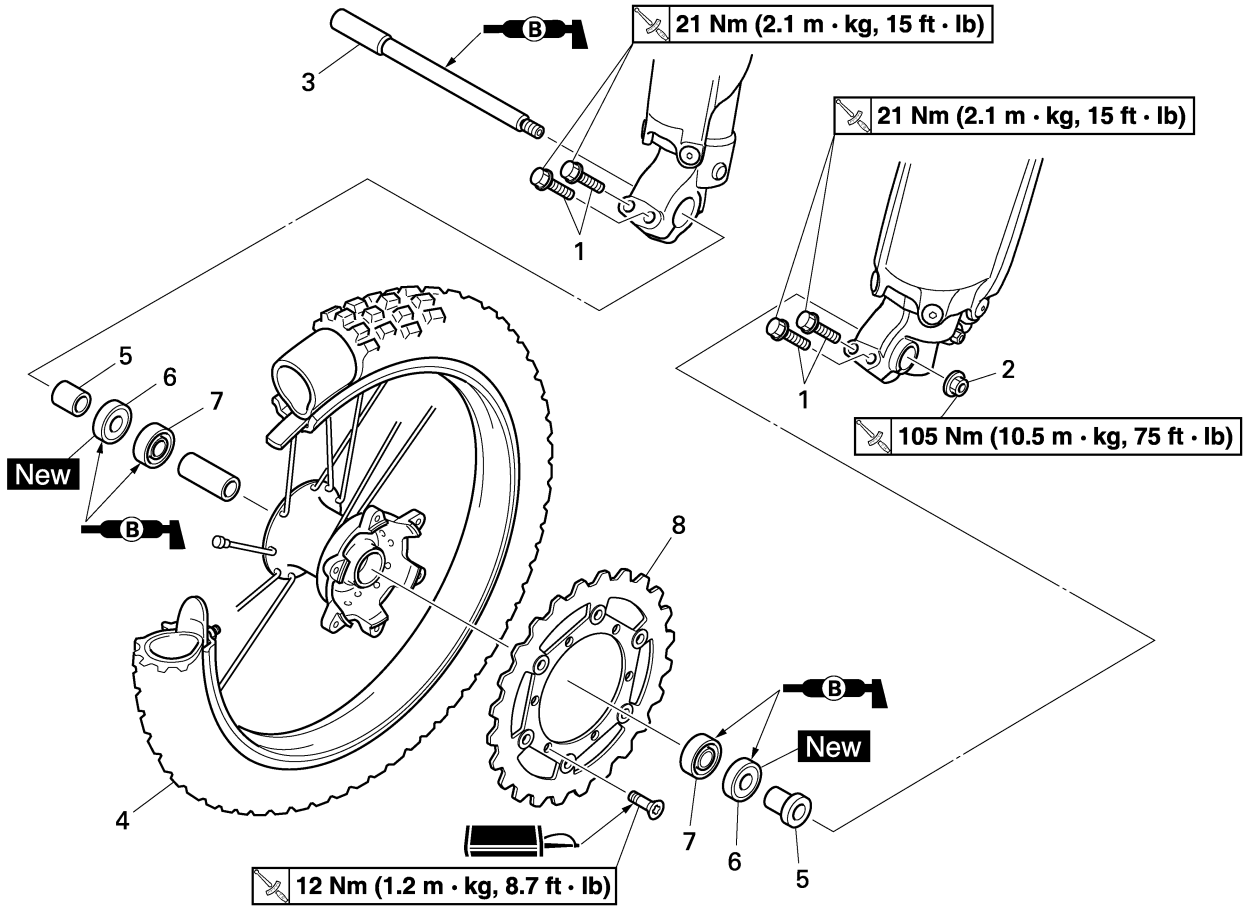

Order	Part name	Q'ty	Remarks
	Hold the machine by placing the suitable stand under the engine.		Refer to "HANDLING NOTE".
1	Bolt (axle holder)	4	Only loosening.
2	Nut (front wheel axle)	1	
3	Front wheel axle	1	
4	Front wheel	1	
5	Collar	2	
6	Oil seal	2	
7	Bearing	2	Refer to removal section.
8	Brake disc	1	

REMOVING THE REAR WHEEL

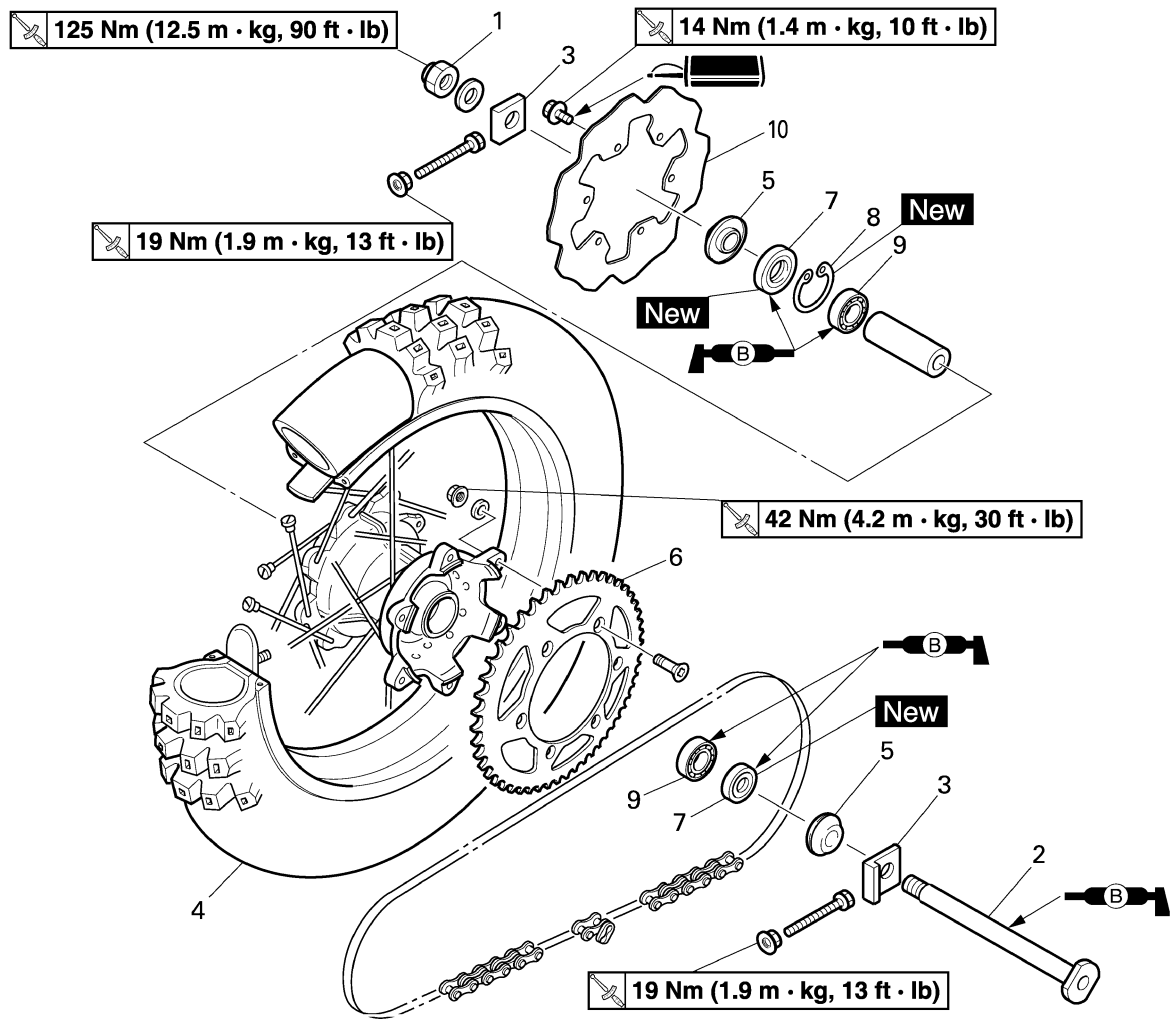

Order	Part name	Q'ty	Remarks
	Hold the machine by placing the suitable stand under the engine.		Refer to "HANDLING NOTE".
1	Nut (rear wheel axle)	1	
2	Rear wheel axle	1	
3	Drive chain puller	2	
4	Rear wheel	1	Refer to removal section.
5	Collar	2	
6	Rear wheel sprocket	1	
7	Oil seal	2	
8	Circlip	1	
9	Bearing	2	Refer to removal section.
10	Brake disc	1	

HANDLING NOTE

⚠ WARNING

Support the machine securely so there is no danger of it falling over.

REMOVING THE REAR WHEEL

1. Remove:
   • Wheel "1"

TIP

Push the wheel forward and remove the drive chain "2".

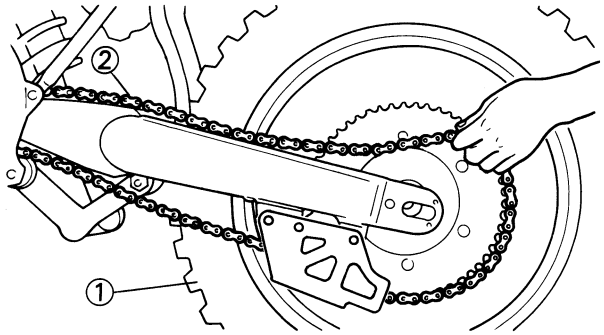

REMOVING THE WHEEL BEARING

1. Remove:
   • Bearing "1"

TIP

Remove the bearing using a general bearing puller "2".

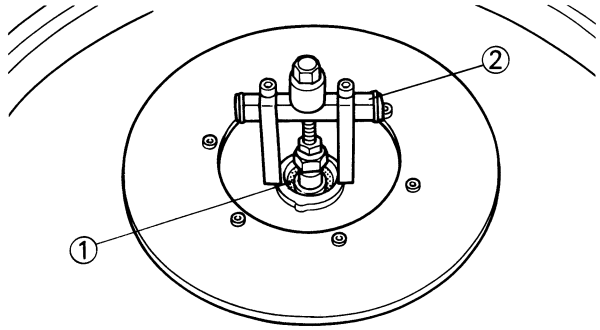

CHECKING THE WHEEL

1. Measure:
   • Wheel runout
   Out of limit → Repair/replace.

	Wheel runout limit: **Radial "1": 2.0 mm (0.08 in)** **Lateral "2": 2.0 mm (0.08 in)**

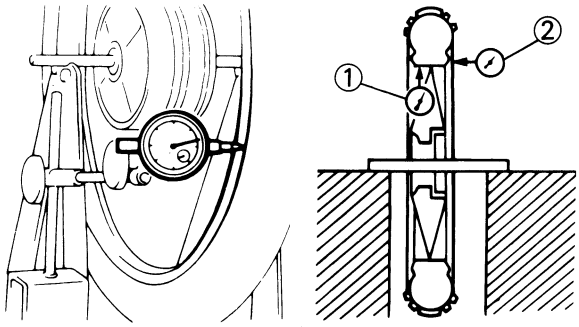

2. Inspect:
   • Bearing
   Rotate inner race with a finger.
   Rough spot/seizure → Replace.

TIP

Replace the bearings, oil seal and wheel collar as a set.

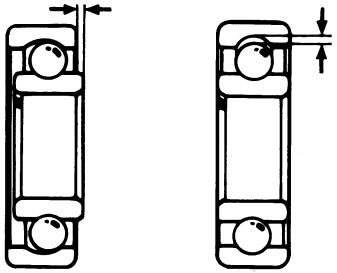

CHECKING THE WHEEL AXLE

1. Measure:
   • Wheel axle bends
   Out of specification → Replace.
   Use the dial gauge "1".

	Wheel axle bending limit: **0.5 mm (0.020 in)**

TIP

The bending value is shown by one half of the dial gauge reading.

⚠ WARNING

Do not attempt to straighten a bent axle.

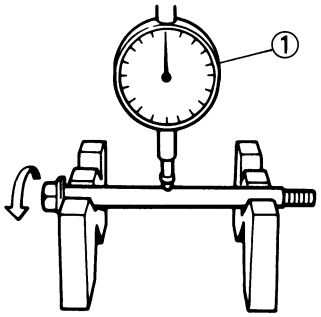

CHECKING THE BRAKE DISC

1. Measure:
   • Brake disc deflection (only rear brake disc)
   Use the dial gauge "1".
   Out of specification → Inspect wheel runout.
   If wheel runout is in good condition, replace the brake disc.

	Brake disc deflection limit: **Rear:** **<Limit>: 0.15 mm (0.006 in)**

2. Measure:
   • Brake disc thickness "a"
   Out of limit → Replace.

	Brake disc thickness: **Front:** **3.0 mm (0.12 in)** **<Limit>: 2.5 mm (0.10 in)** **Rear:** **4.0 mm (0.16 in)** **<Limit>: 3.5 mm (0.14 in)**

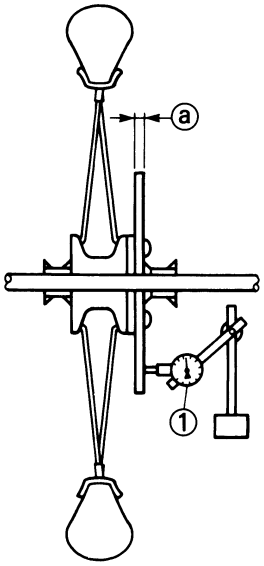

INSTALLING THE FRONT WHEEL

1. Install:
   • Bearing (left) "1"
   • Spacer "2"
   • Bearing (right) "3"
   • Oil seal "4" New

TIP

• Apply the lithium soap base grease on the bearing and oil seal lip when installing.
• Use a socket that matches the outside diameter of the race of the bearing.
• Left side of bearing shall be installed first.
• Install the oil seal with its manufacture's marks or numbers facing outward.

NOTICE

Do not strike the inner race of the bearing. Contact should be made only with the outer race.

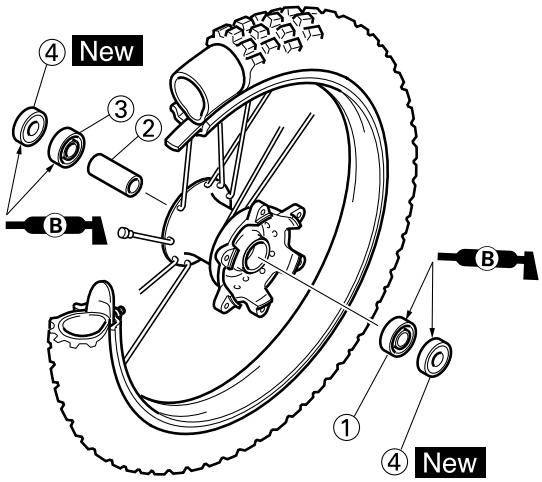

2. Install:
   • Brake disc "1"
   • Bolt (brake disc) "2"

	Bolt (brake disc): **12 Nm (1.2 m•kg, 8.7 ft•lb)**

TIP

Tighten the bolts in stage, using a crisscross pattern.

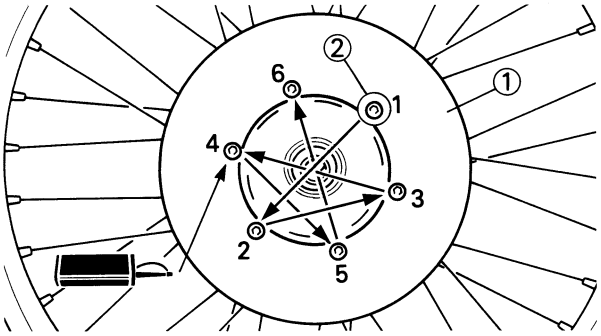

3. Install:
   • Collar "1"

TIP
- Apply the lithium soap base grease on the oil seal lip.
- Install the collars with their projections "a" facing the wheel.

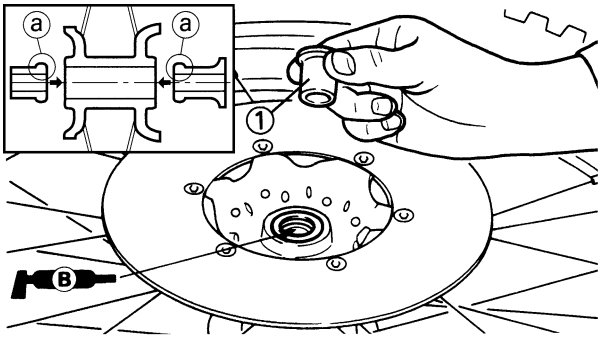

4. Install:
   • Wheel

TIP
Install the brake disc "1" between the brake pads "2" correctly.

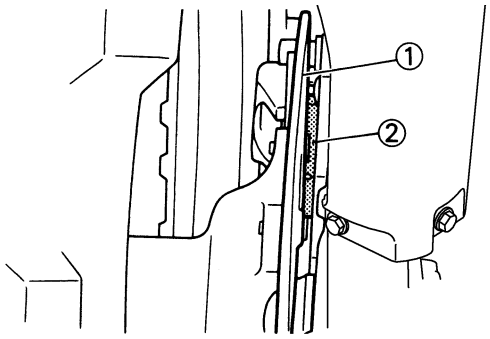

5. Install:
   • Wheel axle "1"

TIP
Apply the lithium soap base grease on the wheel axle.

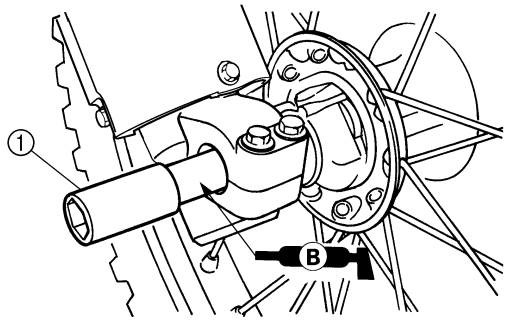

6. Install:
   • Nut (wheel axle) "1"

	Nut (wheel axle): **105 Nm (10.5 m•kg, 75 ft•lb)**

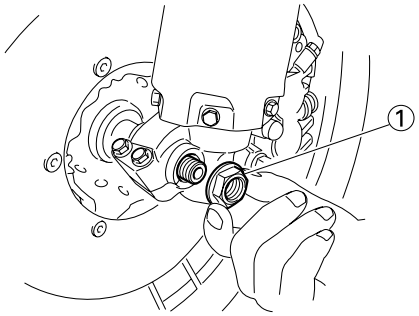

7. Tighten:
   • Bolt (axle holder) "1"

	Bolt (axle holder): **21 Nm (2.1 m•kg, 15 ft•lb)**

TIP
Before tightening the bolt, fit the wheel axle to the axle holder by stroking the front fork several times with the front brake applied.

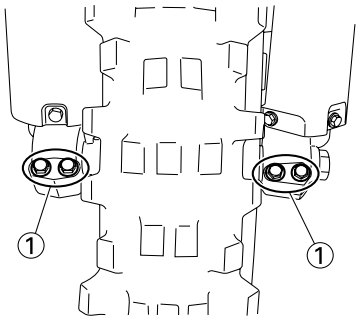

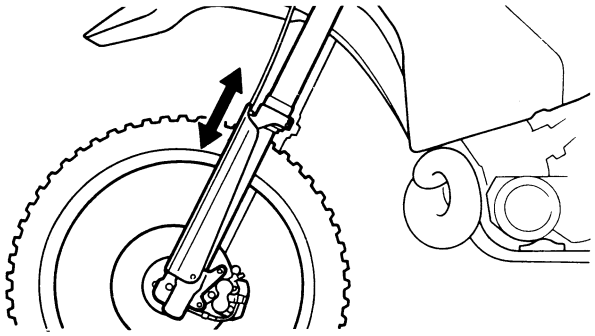

INSTALLING THE REAR WHEEL

1. Install:
   - Bearing (right) "1"
   - Circlip "2" New
   - Spacer "3"
   - Bearing (left) "4"
   - Oil seal "5" New

TIP

- Apply the lithium soap base grease on the bearing and oil seal lip when installing.
- Install the bearing with seal facing outward.
- Use a socket that matches the outside diameter of the race of the bearing.
- Right side of bearing shall be installed first.
- Install the oil seal with its manufacture's marks or numbers facing outward.

NOTICE

Do not strike the inner race of the bearing. Contact should be made only with the outer race.

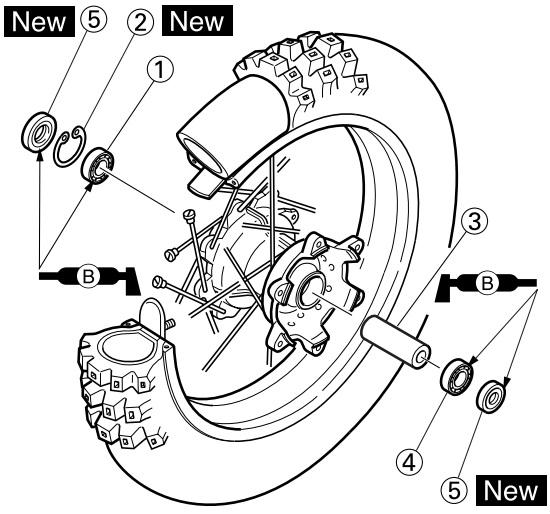

2. Install:
   - Brake disc "1"
   - Bolt (brake disc) "2"

	Bolt (brake disc): 14 Nm (1.4 m•kg, 10 ft•lb)

TIP

Tighten the bolts in stage, using a crisscross pattern.

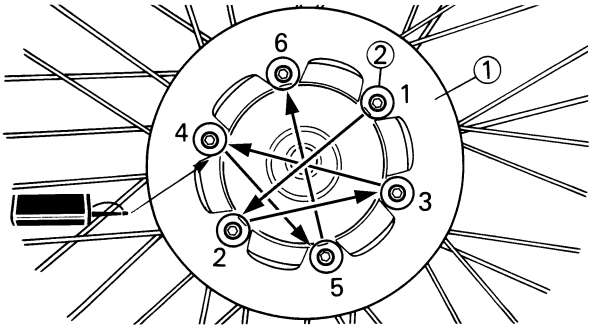

3. Install:
   - Rear wheel sprocket "1"
   - Bolt (rear wheel sprocket) "2"
   - Washer (rear wheel sprocket) "3"
   - Nut (rear wheel sprocket) "4"

	Nut (rear wheel sprocket): 42 Nm (4.2 m•kg, 30 ft•lb)

TIP

Tighten the nuts in stage, using a crisscross pattern.

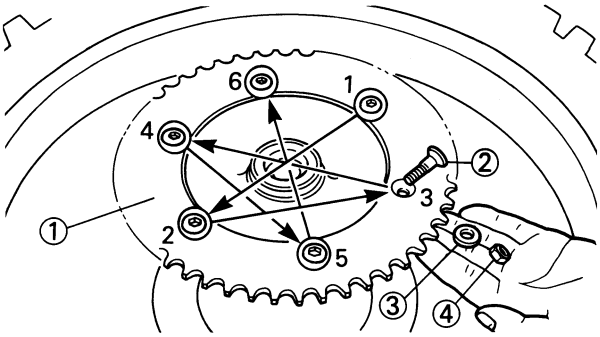

4. Install:
   - Collar "1"

TIP

Apply the lithium soap base grease on the oil seal lip.

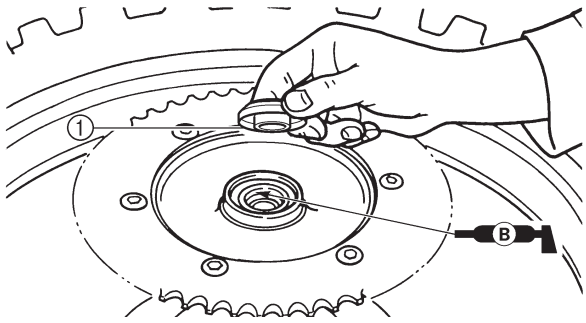

5. Install:
   • Wheel

TIP
Install the brake disc "1" between the brake pads "2" correctly.

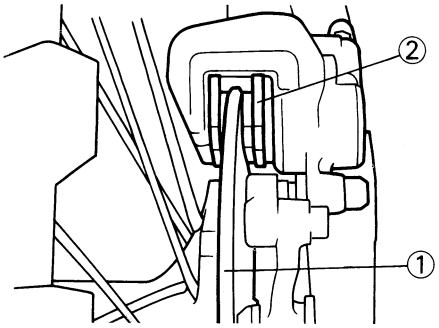

6. Install:
   • Drive chain "1"

TIP
Push the wheel "2" forward and install the drive chain.

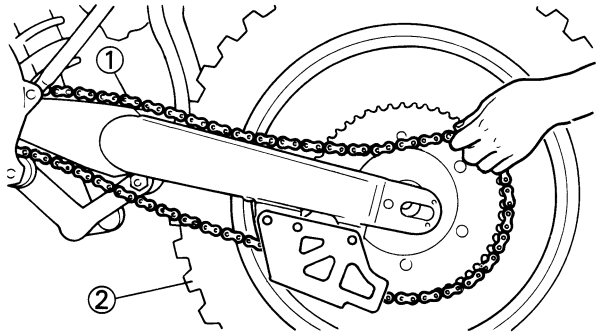

7. Install:
   • Left drive chain puller "1"
   • Wheel axle "2"

TIP
- Install the left drive chain puller, and insert the wheel axle from left side.
- Apply the lithium soap base grease on the wheel axle.

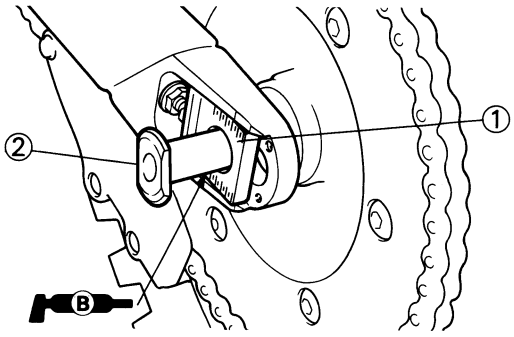

8. Install:
   • Right drive chain puller "1"
   • Washer "2"
   • Nut (wheel axle) "3"

TIP
Temporarily tighten the nut (wheel axle) at this point.

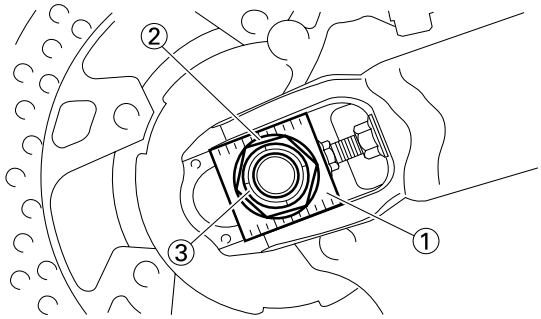

9. Adjust:
   • Drive chain slack "a"

	Drive chain slack: **48–58 mm (1.9–2.3 in)**

Refer to "ADJUSTING THE DRIVE CHAIN SLACK" section in the CHAPTER 3.

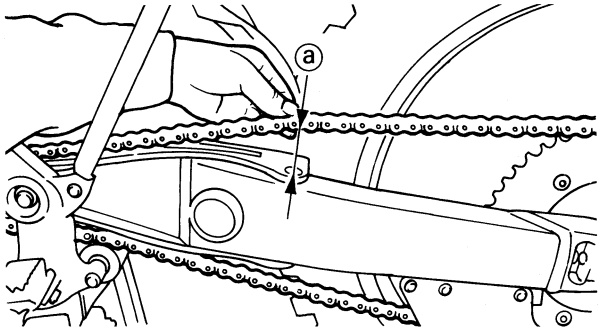

10. Tighten:
   • Nut (wheel axle) "1"

	Nut (wheel axle): **125 Nm (12.5 m•kg, 90 ft•lb)**

   • Locknut "2"

	Locknut: **19 Nm (1.9 m•kg, 13 ft•lb)**

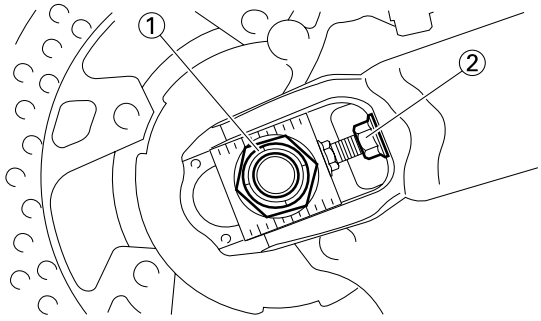

FRONT BRAKE AND REAR BRAKE

REMOVING THE FRONT BRAKE

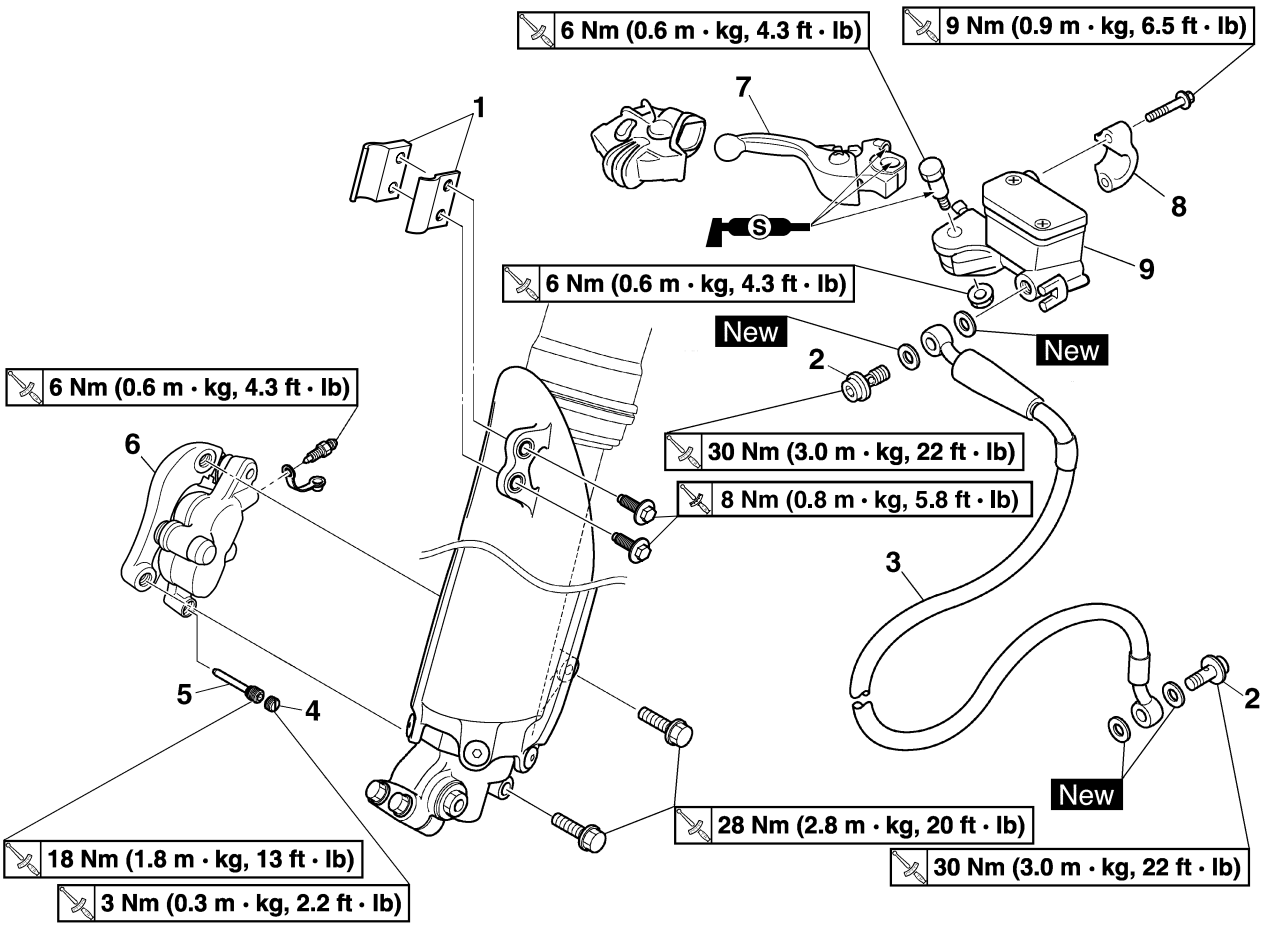

Order	Part name	Q'ty	Remarks
	Hold the machine by placing the suitable stand under the engine.		Refer to "HANDLING NOTE".
	Drain the brake fluid.		Refer to removal section.
1	Brake hose holder (protector)	2	
2	Union bolt	2	
3	Brake hose	1	
4	Pad pin plug	1	Remove when loosening the pad pin.
5	Pad pin	1	Loosen when disassembling the brake caliper.
6	Brake caliper	1	
7	Brake lever	1	
8	Brake master cylinder bracket	1	
9	Brake master cylinder	1	

REMOVING THE REAR BRAKE

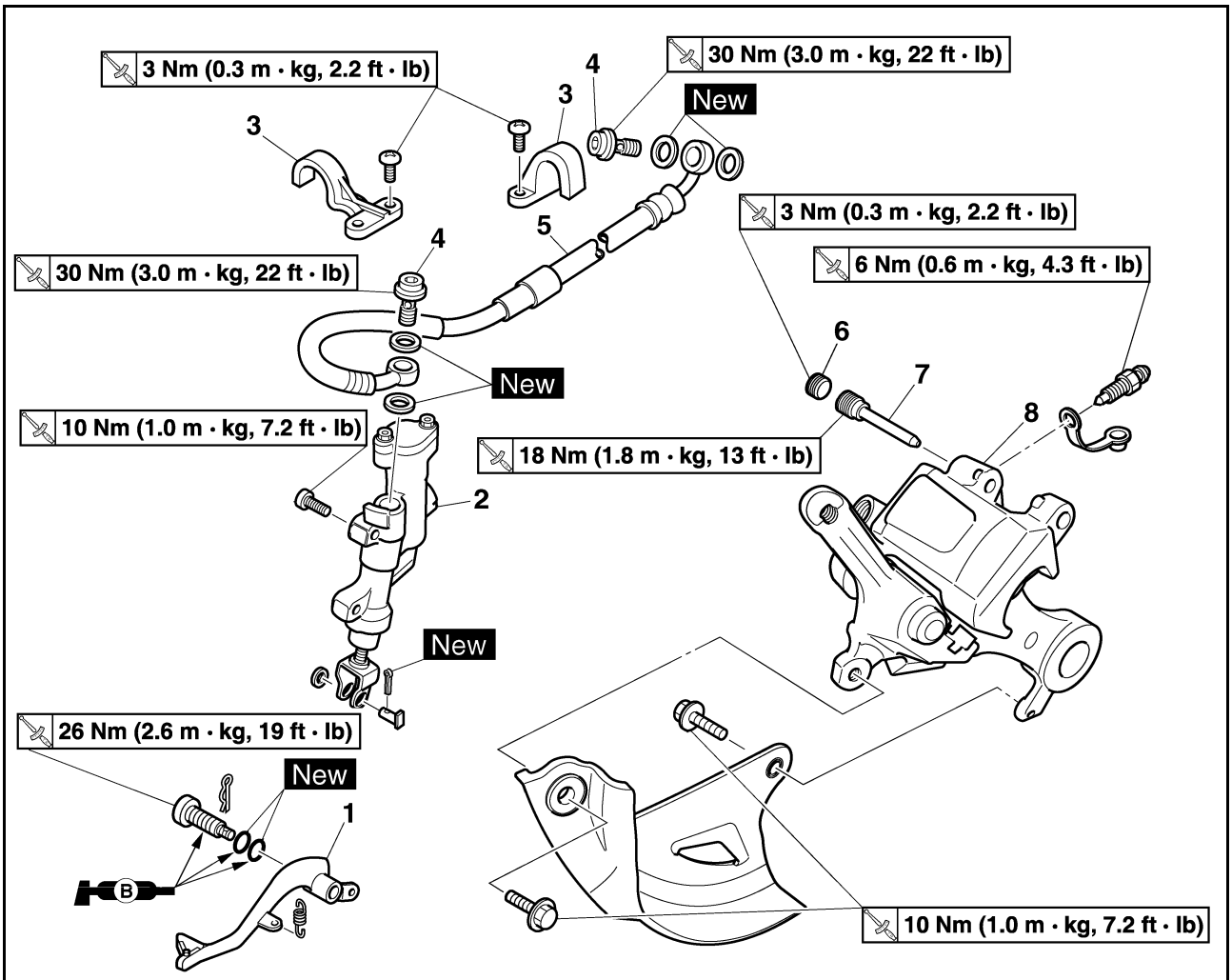

Order	Part name	Q'ty	Remarks
	Hold the machine by placing the suitable stand under the engine.		Refer to "HANDLING NOTE".
	Rear wheel		Refer to "FRONT WHEEL AND REAR WHEEL" section.
	Drain the brake fluid.		Refer to removal section.
1	Brake pedal	1	
2	Brake master cylinder	1	
3	Brake hose holder	2	
4	Union bolt	2	
5	Brake hose	1	
6	Pad pin plug	1	Remove when loosening the pad pin.
7	Pad pin	1	Loosen when disassembling the brake caliper.
8	Brake caliper	1	

DISASSEMBLING THE BRAKE CALIPER

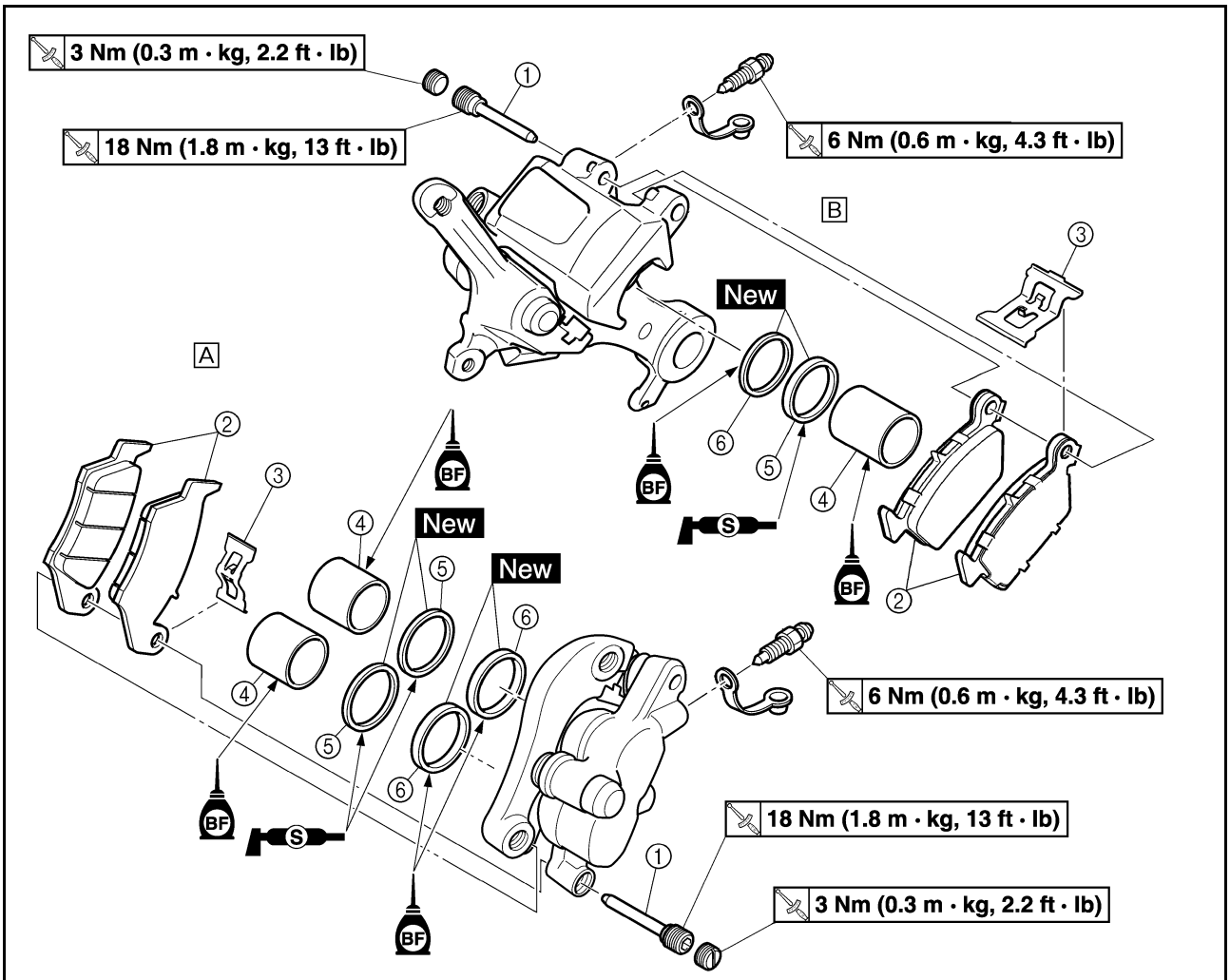

Order	Part name	Q'ty		Remarks
				A. Front B. Rear
		A	B	
1	Pad pin	1	1	
2	Brake pad	2	2	
3	Pad support	1	1	
4	Brake caliper piston	2	1	Refer to removal section.
5	Brake caliper piston dust seal	2	1	Refer to removal section.
6	Brake caliper piston seal	2	1	Refer to removal section.

DISASSEMBLING THE BRAKE MASTER CYLINDER

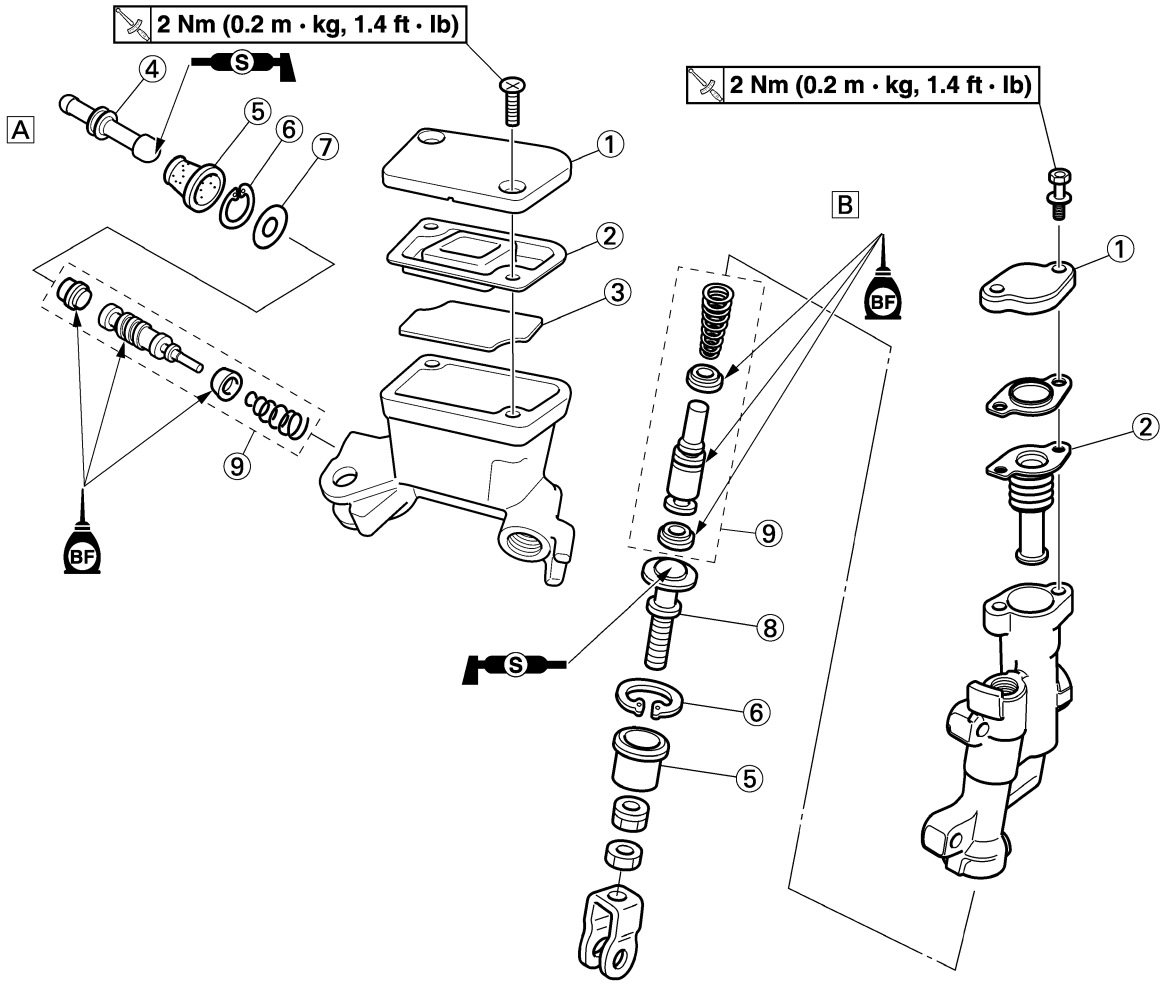

Order	Part name	Q'ty	Remarks
			A. Front B. Rear
1	Brake master cylinder cap	1	
2	Diaphragm	1	
3	Reservoir float	1	
4	Push rod (Front)	1	
5	Brake master cylinder boot	1	
6	Circlip	1	Use a long nose circlip pliers.
7	Washer	1	
8	Push rod (Rear)	1	
9	Brake master cylinder kit	1	

HANDLING NOTE

⚠ WARNING

Support the machine securely so there is no danger of it falling over.

DRAINING THE BRAKE FLUID

1. Remove:
   - Brake master cylinder cap "1"
   - Protector (rear brake)

TIP

Do not remove the diaphragm.

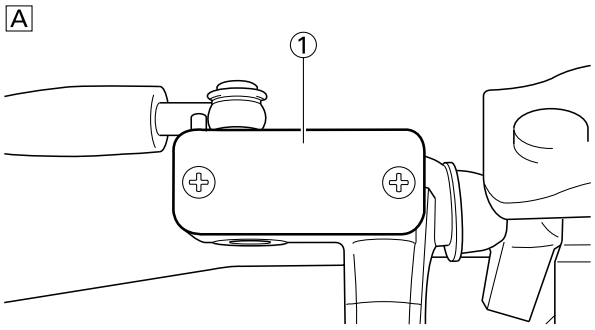

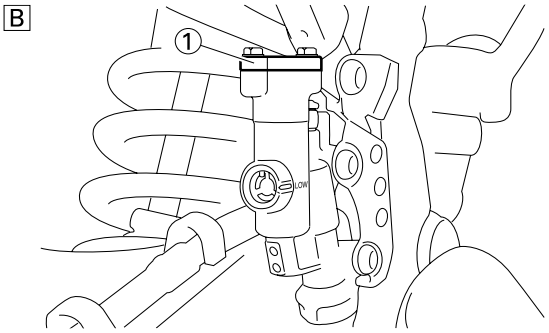

A. Front
B. Rear

2. Connect the transparent hose "2" to the bleed screw "1" and place a suitable container under its end.

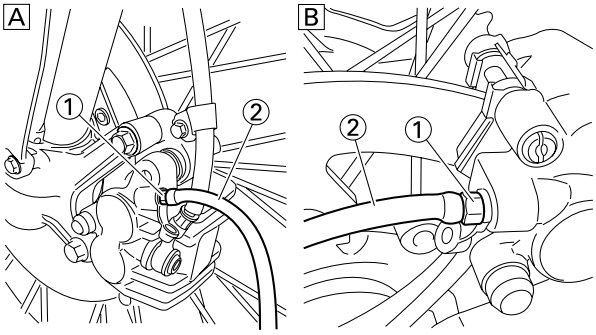

A. Front
B. Rear

3. Loosen the bleed screw and drain the brake fluid while pulling the lever in or pushing down on the pedal.

⚠ WARNING

- **Do not reuse the drained brake fluid.**
- **Brake fluid may erode painted surfaces or plastic parts. Always clean up spilled fluid immediately.**

REMOVING THE BRAKE CALIPER PISTON

1. Remove:
   - Brake caliper piston

   Use compressed air and proceed carefully.

⚠ WARNING

- **Cover piston with rag and use extreme caution when expelling piston from cylinder.**
- **Never attempt to pry out piston.**

▼▼▼▼▼▼▼▼▼▼▼▼▼▼▼▼▼▼▼▼▼▼▼▼▼▼▼▼▼▼▼▼

Caliper piston removal steps:

a. Insert a piece of rag into the brake caliper to lock one brake caliper.
b. Carefully force the piston out of the brake caliper cylinder with compressed air.

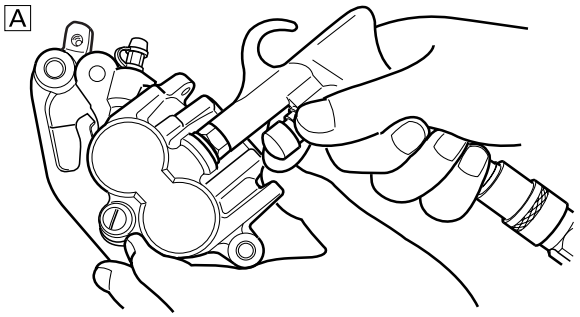

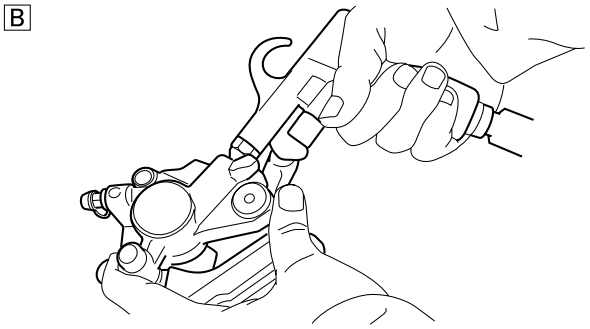

A. Front
B. Rear

▲▲▲▲▲▲▲▲▲▲▲▲▲▲▲▲▲▲▲▲▲▲▲▲▲▲▲▲▲▲▲▲

REMOVING THE BRAKE CALIPER PISTON SEAL KIT

1. Remove:
   - Brake caliper piston dust seal "1"
   - Brake caliper piston seal "2"

TIP

Remove the brake caliper piston seals and brake caliper piston dust seals by pushing them with a finger.

NOTICE

Never attempt to pry out brake caliper piston seals and brake caliper piston dust seals.

⚠ WARNING

Replace the brake caliper piston seals and brake caliper piston dust seals whenever a caliper is disassembled.

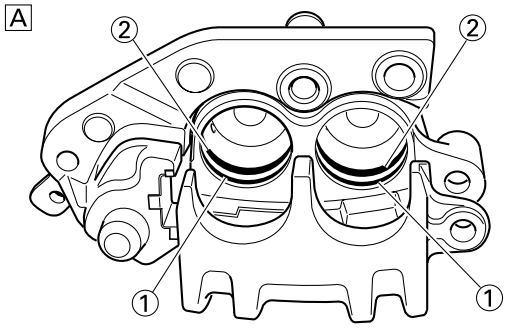

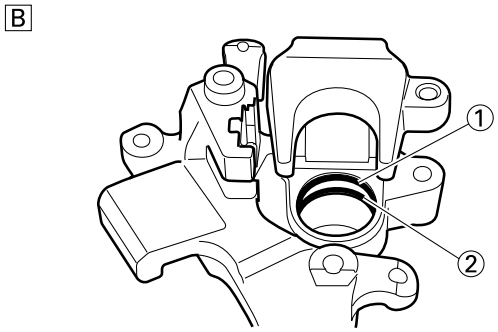

A. Front
B. Rear

CHECKING THE BRAKE MASTER CYLINDER

1. Inspect:
   - Brake master cylinder inner surface "a"
     Wear/scratches → Replace master cylinder assembly.
     Stains → Clean.

⚠ WARNING

Use only new brake fluid.

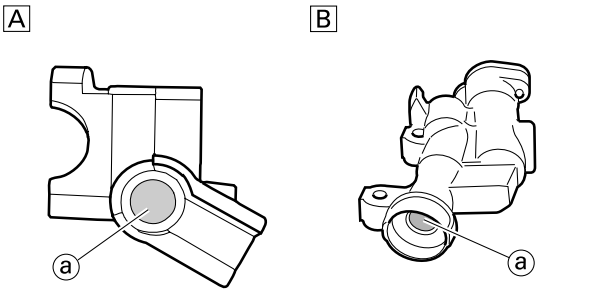

A. Front
B. Rear

2. Inspect:
   - Diaphragm "1"
     Crack/damage → Replace.

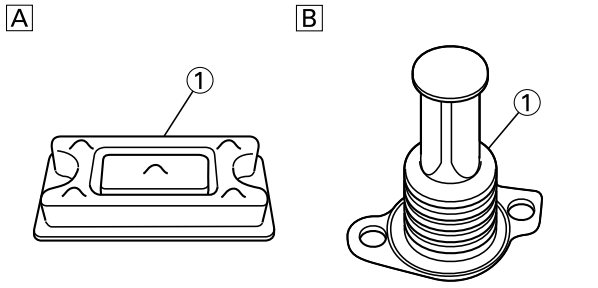

A. Front
B. Rear

3. Inspect: (front brake only)
   - Reservoir float "1"
     Damage → Replace.

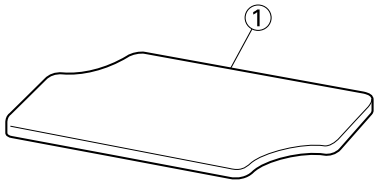

4. Inspect:
   - Brake master cylinder piston "1"
   - Brake master cylinder cup "2"
     Wear/damage/score marks→Replace brake master cylinder kit.

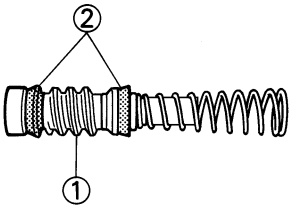

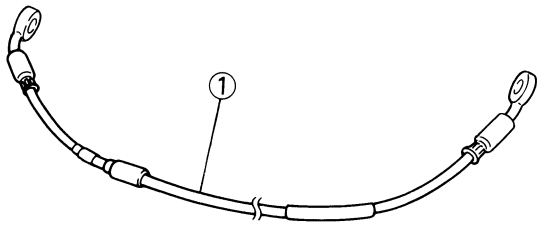

CHECKING THE BRAKE CALIPER

1. Inspect:
   - Brake caliper cylinder inner surface "a"
     Wear/score marks → Replace brake caliper assembly.

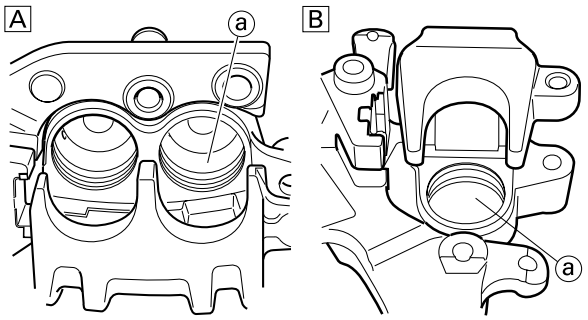

   A. Front
   B. Rear
2. Inspect:
   - Brake caliper piston "1"
     Wear/score marks → Replace brake caliper piston assembly.

⚠ WARNING

Replace the brake caliper piston seals and brake caliper piston dust seals "2" whenever a caliper is disassembled.

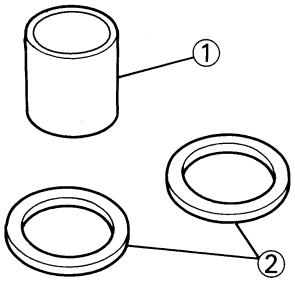

CHECKING THE BRAKE HOSE

1. Inspect:
   - Brake hose "1"
     Crack/damage → Replace.

HANDLING NOTE

⚠ WARNING

- **All internal parts should be cleaned in new brake fluid only.**
- **Internal parts should be lubricated with brake fluid when installed.**
- **Replace the brake caliper piston seals and brake caliper piston dust seals whenever a caliper is disassembled.**

INSTALLING THE BRAKE CALIPER PISTON

1. Clean:
   - Brake caliper
   - Brake caliper piston seal
   - Brake caliper piston dust seal
   - Brake caliper piston
     Clean them with brake fluid.
2. Install:
   - Brake caliper piston seal "1" New
   - Brake caliper piston dust seal "2" New

⚠ WARNING

Always use new brake caliper piston seals and brake caliper piston dust seals.

TIP

- Apply the brake fluid on the brake caliper piston seal.
- Apply the silicone grease on the brake caliper piston dust seal.
- Fit the brake caliper piston seals and brake caliper piston dust seals onto the slot on brake caliper correctly.

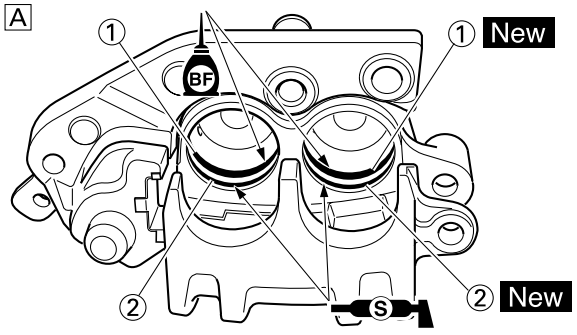

B

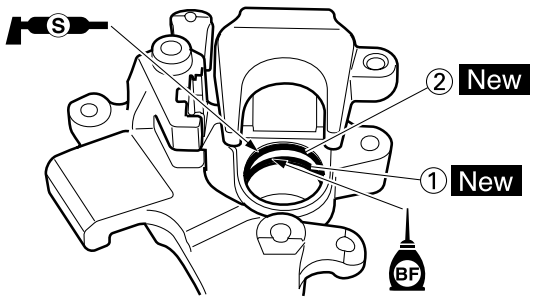

A. Front
B. Rear

3. Install:
   • Brake caliper piston "1"

TIP
Apply the brake fluid on the piston wall.

NOTICE
• Install the piston with its shallow depressed side "a" facing the brake caliper.
• Never force to insert.

A

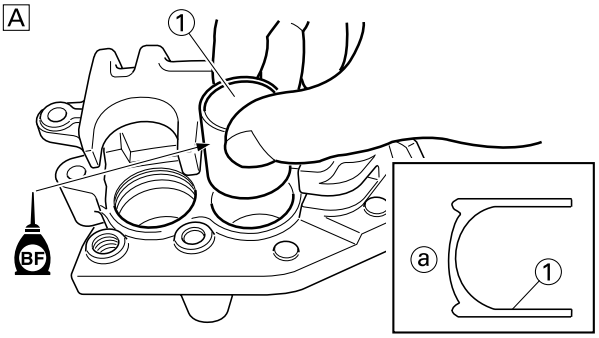

B

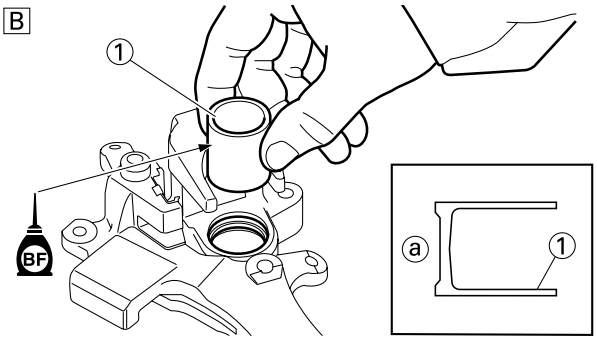

A. Front
B. Rear

INSTALLING THE FRONT BRAKE CALIPER

1. Install:
   • Pad support "1"
   • Brake pad "2"
   • Pad pin "3"

TIP
• Install the brake pads with their projections "a" into the brake caliper recesses "b".
• Temporarily tighten the pad pin at this point.

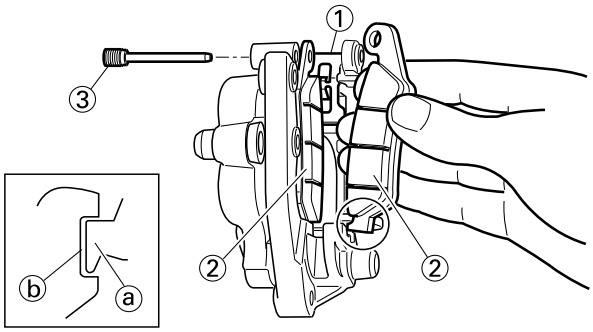

2. Install:
   • Brake caliper "1"
   • Bolt (brake caliper) "2"

	Bolt (brake caliper): 28 Nm (2.8 m•kg, 20 ft•lb)

3. Tighten:
   • Pad pin "3"

	Pad pin: 18 Nm (1.8 m•kg, 13 ft•lb)

4. Install:
   • Pad pin plug "4"

	Pad pin plug: 3 Nm (0.3 m•kg, 2.2 ft•lb)

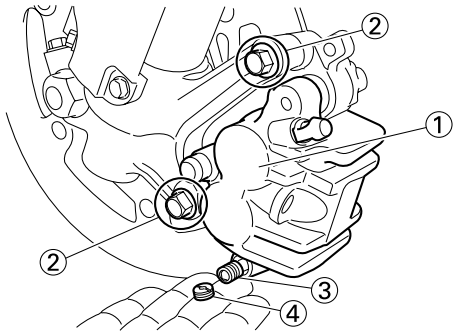

INSTALLING THE REAR BRAKE CALIPER

1. Install:
   • Pad support "1"
   • Brake pad "2"
   • Pad pin "3"

TIP
• Install the brake pads with their projections "a" into the brake caliper recesses "b".
• Temporarily tighten the pad pin at this point.

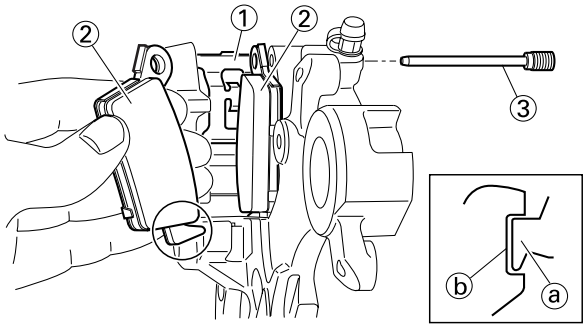

2. Install:
   • Brake disc cover "1"
   • Bolt (brake disc cover) "2"

	Bolt (brake disc cover): 10 Nm (1.0 m•kg, 7.2 ft•lb)

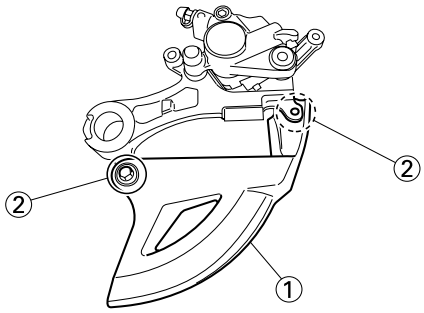

3. Install:
   • Brake caliper "1"
   • Rear wheel "2"
   Refer to "FRONT WHEEL AND REAR WHEEL" section.
4. Tighten:
   • Pad pin "3"

	Pad pin: 18 Nm (1.8 m•kg, 13 ft•lb)

5. Install:
   • Pad pin plug "4"

	Pad pin plug: 3 Nm (0.3 m•kg, 2.2 ft•lb)

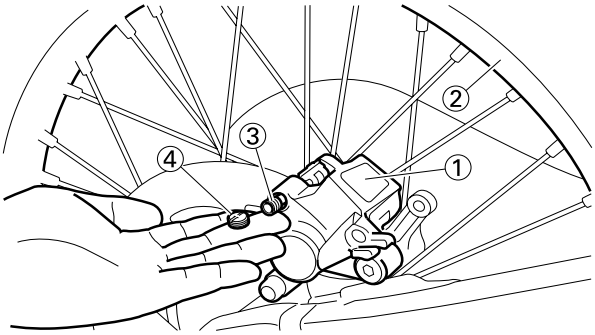

INSTALLING THE BRAKE MASTER CYLINDER KIT

1. Clean:
   • Brake master cylinder
   • Brake master cylinder kit
   Clean them with brake fluid.
2. Install:
   • Brake master cylinder cup (primary) "1"
   • Brake master cylinder cup (secondary) "2"
   To brake master cylinder piston "3".

TIP

Apply the brake fluid on the brake master cylinder cup.

⚠ WARNING

After installing, cylinder cup should be installed as shown direction. Wrong installation cause improper brake performance.

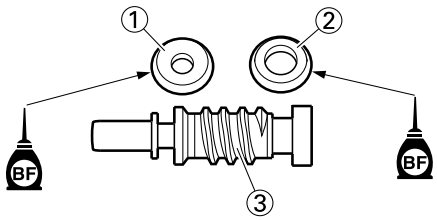

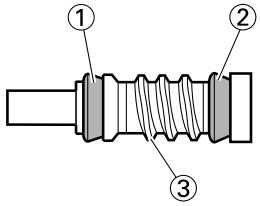

3. Install:
   • Spring "1"
   To brake master cylinder piston "2".

TIP

Install the spring at the smaller dia. side.

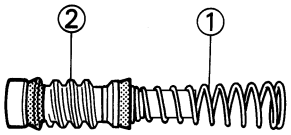

4. Install:
   - Brake master cylinder kit "1"
   - Washer (front brake) "2"
   - Push rod (rear brake) "2"
   - Circlip "3"
   - Brake master cylinder boot "4"
   - Push rod (front brake) "5"
     To brake master cylinder.

TIP
- Apply the brake fluid on the brake master cylinder kit.
- Apply the silicone grease on the tip of the push rod.
- When installing the circlip, use a long nose circlip pliers.

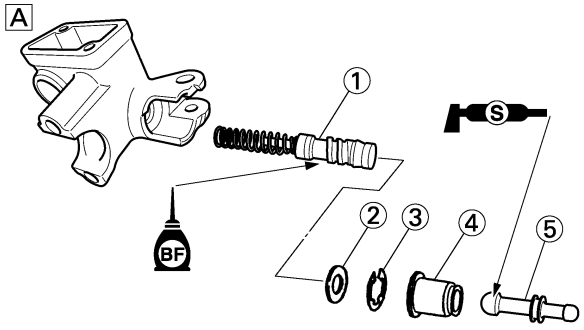

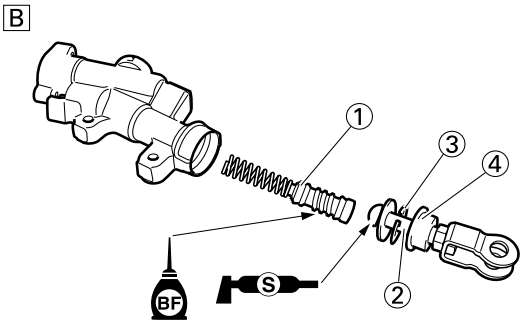

A. Front
B. Rear

INSTALLING THE FRONT BRAKE MASTER CYLINDER

1. Install:
   - Brake master cylinder "1"
   - Brake master cylinder bracket "2"
   - Bolt (brake master cylinder bracket) "3"

	Bolt (brake master cylinder bracket): **9 Nm (0.9 m•kg, 6.5 ft•lb)**

TIP
- Install the bracket so that the arrow mark "a" face upward.
- First tighten the bolts on the upper side of the brake master cylinder bracket, and then tighten the bolts on the lower side.

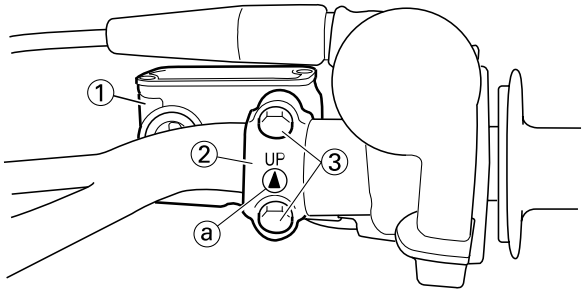

2. Install:
   - Brake lever "1"
   - Bolt (brake lever) "2"

	Bolt (brake lever): **6 Nm (0.6 m•kg, 4.3 ft•lb)**

   - Nut (brake lever) "3"

	Nut (brake lever): **6 Nm (0.6 m•kg, 4.3 ft•lb)**

TIP
Apply the silicone grease on the brake lever sliding surface, bolt and tip of the push rod.

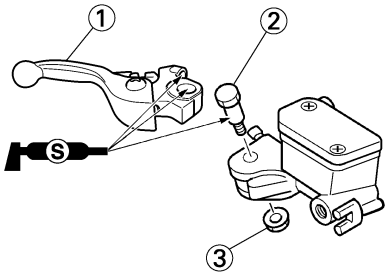

INSTALLING THE REAR BRAKE MASTER CYLINDER

1. Install:
   - Copper washer "1" New
   - Brake hose "2"
   - Union bolt "3"

	Union bolt: 30 Nm (3.0 m•kg, 22 ft•lb)

⚠ WARNING

Always use new copper washers.

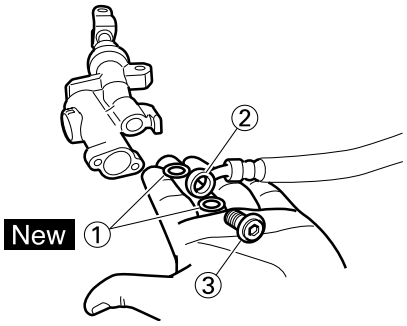

NOTICE

Install the brake hose so that its pipe portion "a" directs as shown and lightly touches the projection "b" on the brake master cylinder.

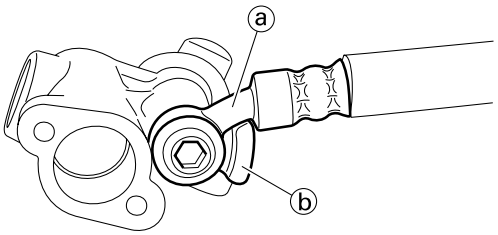

2. Install:
   - Brake master cylinder "1"
   - Bolt (brake master cylinder) "2"

	Bolt (brake master cylinder): 10 Nm (1.0 m•kg, 7.2 ft•lb)

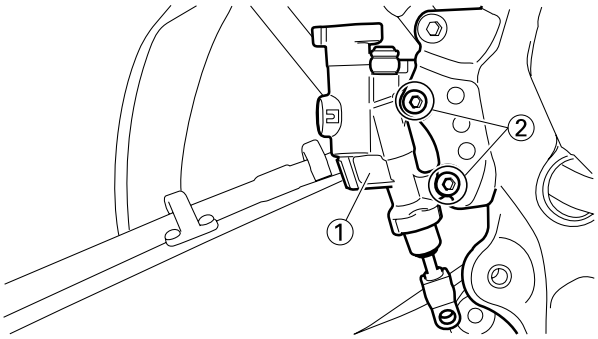

3. Install:
   - Spring "1"
   - Brake pedal "2"
   - O-ring "3" New
   - Bolt (brake pedal) "4"

	Bolt (brake pedal): 26 Nm (2.6 m•kg, 19 ft•lb)

   - Clip "5"

TIP

Apply the lithium soap base grease on the bolt, O-ring and brake pedal bracket.

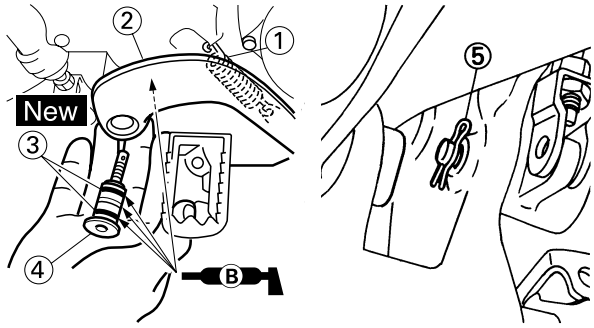

4. Install:
   - Pin "1"
   - Washer "2"
   - Cotter pin "3" New

TIP

After installing, check the brake pedal height. Refer to "ADJUSTING THE REAR BRAKE" section in the CHAPTER 3.

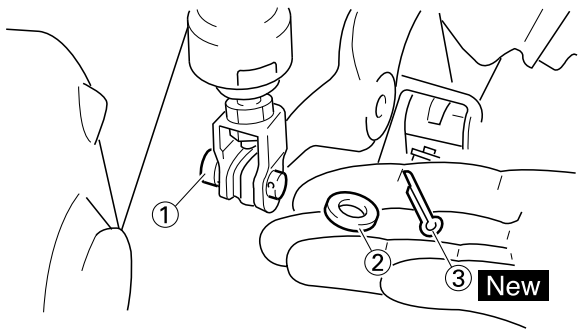

INSTALLING THE FRONT BRAKE HOSE

1. Install:
   - Copper washer "1" New
   - Brake hose "2"
   - Union bolt "3"

	Union bolt: **30 Nm (3.0 m•kg, 22 ft•lb)**

⚠ WARNING

Always use new copper washers.

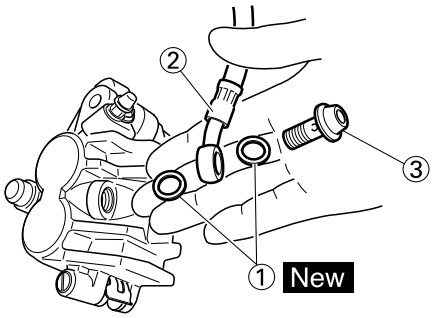

NOTICE

Install the brake hose so that its pipe portion "a" directs as shown and lightly touches the projection "b" on the brake caliper.

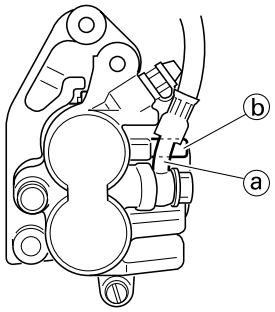

2. Install:
   - Brake hose holder "1"
   - Bolt (brake hose holder) "2"

	Bolt (brake hose holder): **8 Nm (0.8 m•kg, 5.8 ft •lb)**

TIP

Align the top "a" of the brake hose holder with the paint "b" of the brake hose.

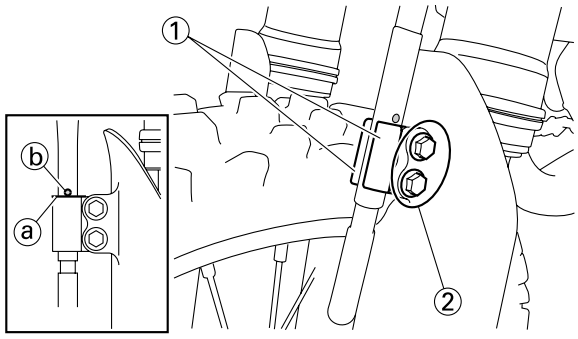

3. Pass the brake hose through the cable guide "1".

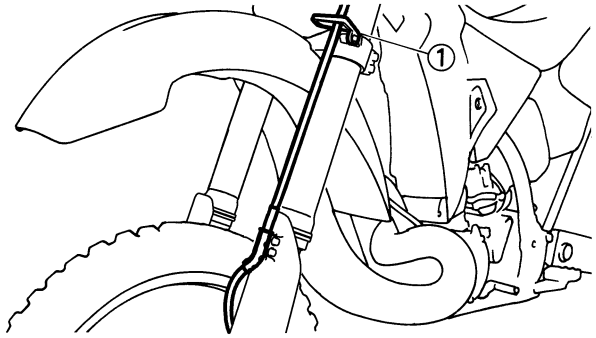

4. Install:
   - Copper washer "1" New
   - Brake hose "2"
   - Union bolt "3"

	Union bolt: **30 Nm (3.0 m•kg, 22 ft•lb)**

⚠ WARNING

Always use new copper washers.

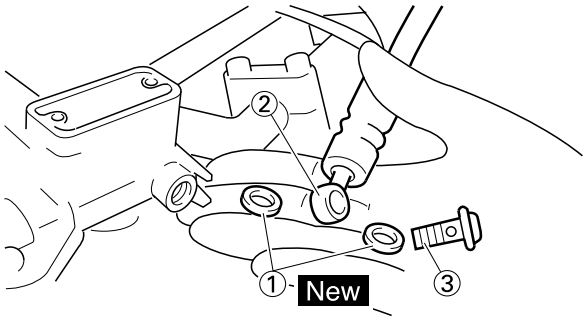

NOTICE

Install the brake hose so that its pipe portion "a" directs as shown and lightly touches the projection "b" on the brake master cylinder.

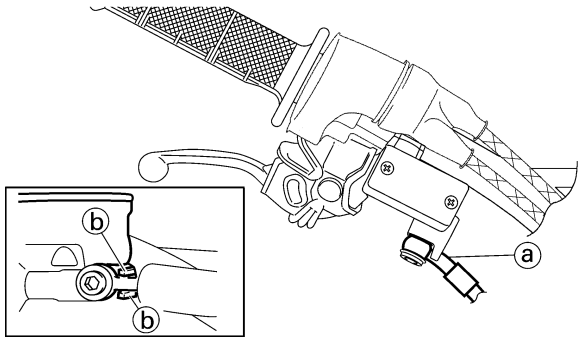

INSTALLING THE REAR BRAKE HOSE

1. Install:
   - Copper washer "1" New
   - Brake hose "2"
   - Union bolt "3"

	Union bolt: **30 Nm (3.0 m•kg, 22 ft•lb)**

⚠ WARNING

Always use new copper washers.

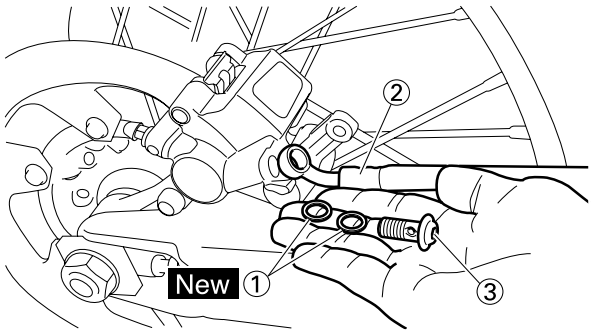

NOTICE

Install the brake hose so that its pipe portion "a" directs as shown and lightly touches the projection "b" on the brake caliper.

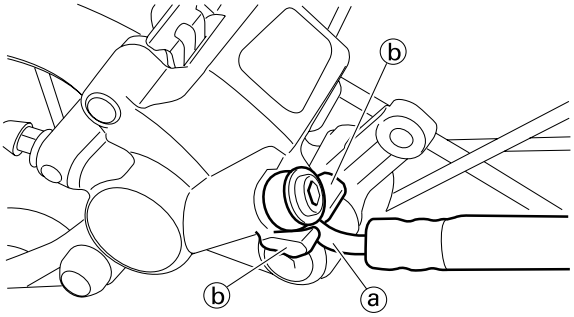

2. Install:
   - Brake hose holder "1"
   - Screw (brake hose holder) "2"

	Screw (brake hose holder): **3 Nm (0.3 m•kg, 2.2 ft•lb)**

NOTICE

After installing the brake hose holders, make sure the brake hose does not contact the spring (rear shock absorber). If it does, correct its twist.

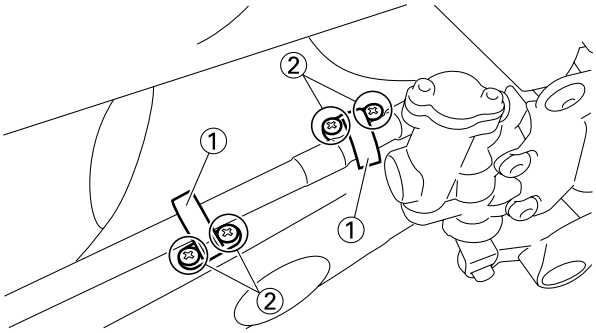

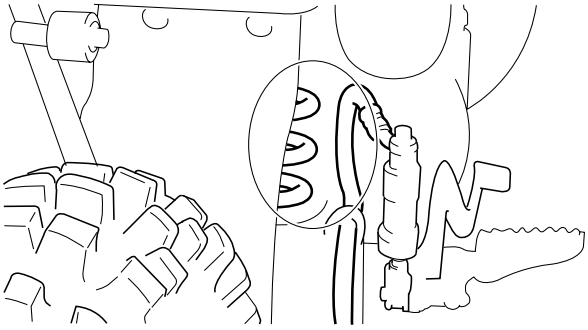

FILLING THE BRAKE FLUID

1. Fill:
   - Brake fluid
     Until the fluid level reaches "LOWER" level line "a".

	Recommended brake fluid: **DOT #4**

⚠ WARNING

- **Use only the designated quality brake fluid:**
  otherwise, the rubber seals may deteriorate, causing leakage and poor brake performance.
- **Refill with the same type of brake fluid; mixing fluids may result in a harmful chemical reaction and lead to poor performance.**
- **Be careful that water does not enter the master cylinder when refilling. Water will significantly lower the boiling point of the fluid and may result in vapor lock.**

NOTICE

Brake fluid may erode painted surfaces or plastic parts. Always clean up spilled fluid immediately.

A

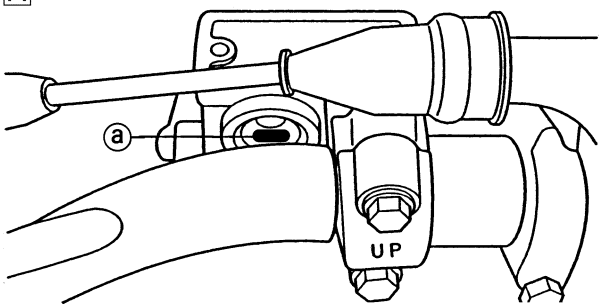

B

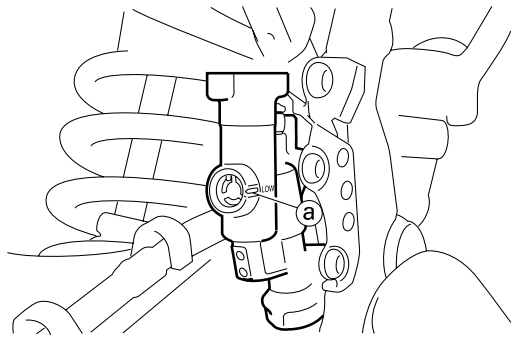

A. Front
B. Rear

2. Air bleed:
   - Brake system
     Refer to "BLEEDING THE HYDRAULIC BRAKE SYSTEM" section in the CHAPTER 3.
3. Inspect:
   - Brake fluid level
     Fluid at lower level → Fill up.
     Refer to "CHECKING THE BRAKE FLUID LEVEL" section in the CHAPTER 3.
4. Install:
   - Reservoir float (front brake)
   - Diaphragm
   - Brake master cylinder cap "1"
   - Screw (bolt) {brake master cylinder cap} "2"

	Screw (bolt) {brake master cylinder cap}: **2 Nm (0.2 m•kg, 1.4 ft•lb)**

⚠ WARNING

After installation, while pulling the brake lever in or pushing down on the brake pedal, check whether there is any brake fluid leaking where the union bolts are installed respectively at the brake master cylinder and brake caliper.

A

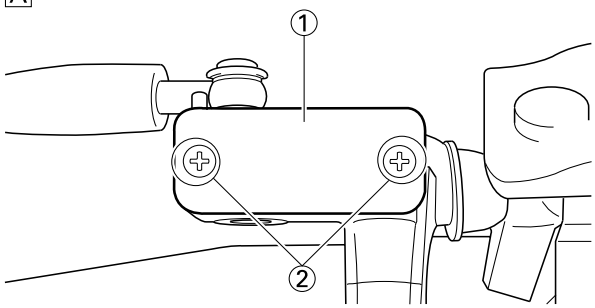

B

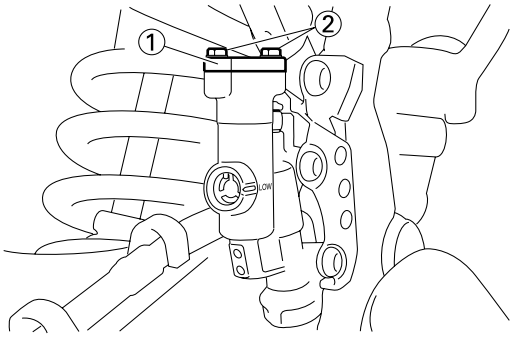

A. Front
B. Rear

5. Install: (rear brake only)
   - Protector "1"
   - Bolt (protector) "2"

	Bolt (protector): **7 Nm (0.7 m•kg, 5.1 ft•lb)**

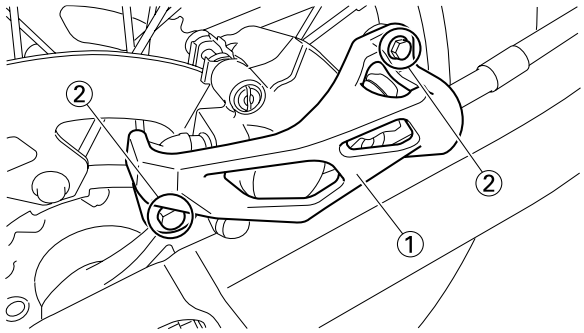

FRONT FORK

REMOVING THE FRONT FORK

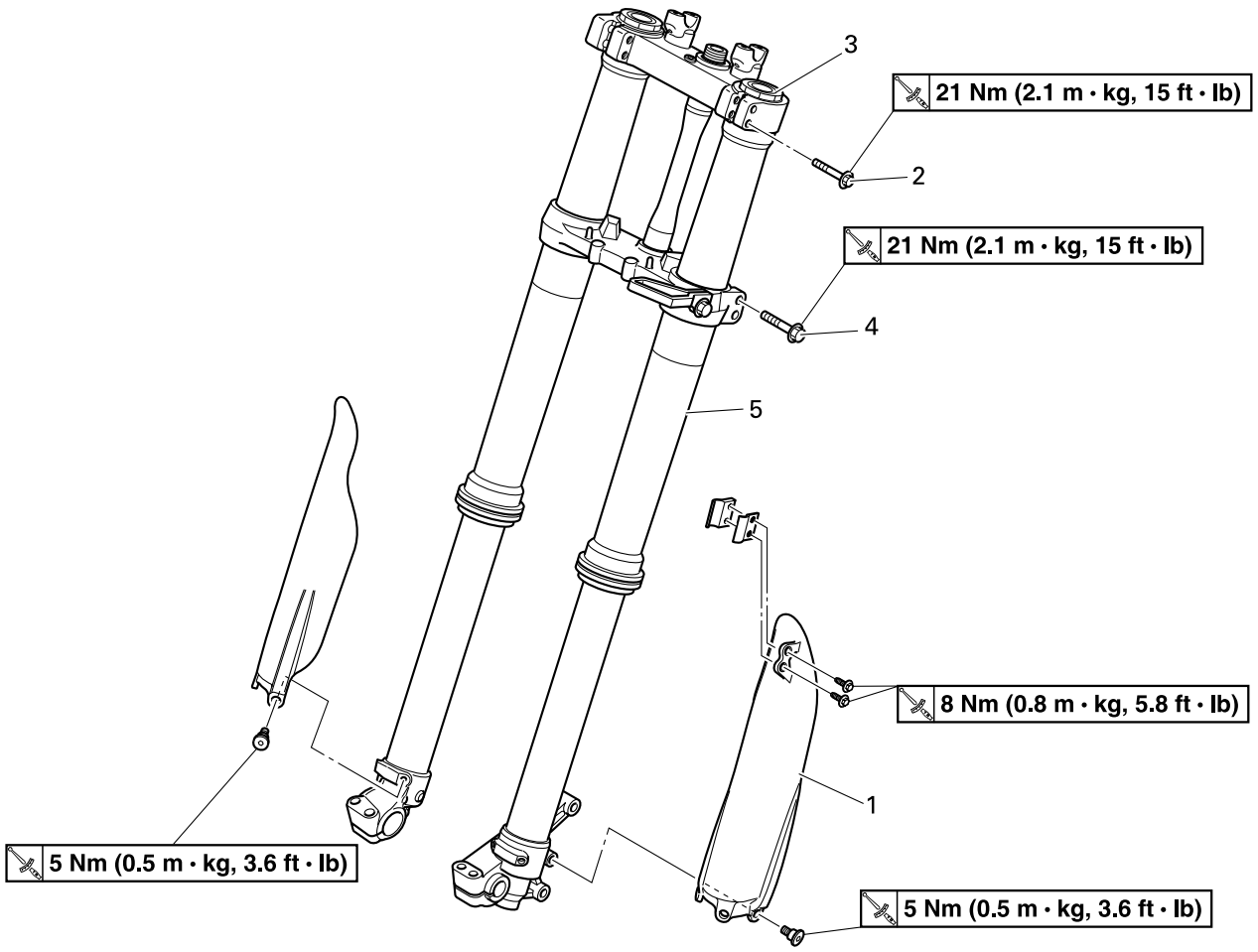

Order	Part name	Q'ty	Remarks
	Hold the machine by placing the suitable stand under the engine.		Refer to "HANDLING NOTE".
	Front wheel		Refer to "FRONT WHEEL AND REAR WHEEL" section.
	Front brake caliper		Refer to "FRONT BRAKE AND REAR BRAKE" section.
	Number plate		Refer to "SEAT, FUEL TANK AND SIDE COVERS" section in the CHAPTER 4.
1	Protector	1	
2	Pinch bolt (upper bracket)	2	Only loosening.
3	Damper assembly	1	Loosen when disassembling the front fork. Refer to removal section.
4	Pinch bolt (lower bracket)	2	Only loosening.
5	Front fork	1	

DISASSEMBLING THE FRONT FORK

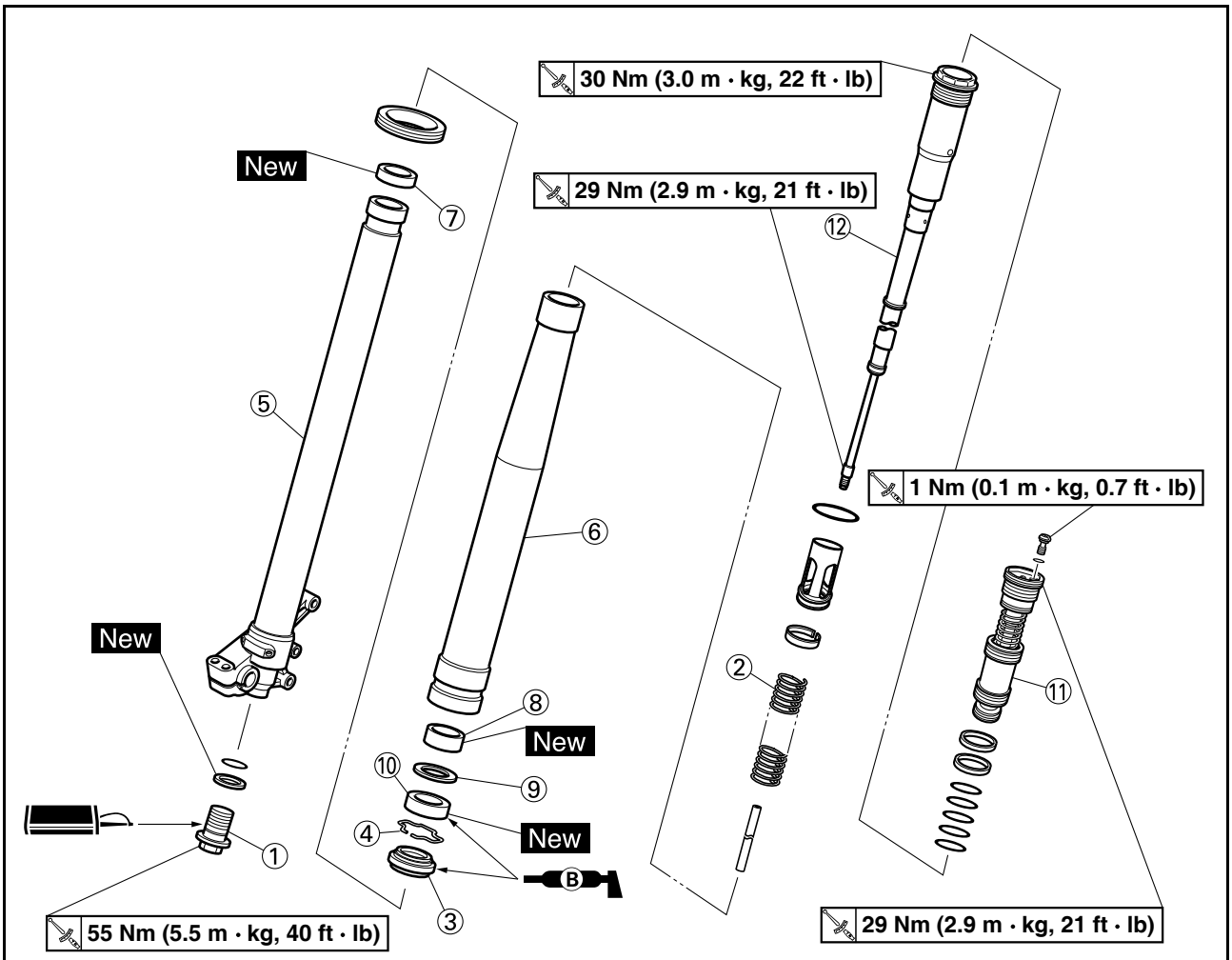

Order	Part name	Q'ty	Remarks
1	Adjuster	1	Drain the fork oil. Refer to removal section.
2	Fork spring	1	
3	Dust seal	1	Refer to removal section.
4	Stopper ring	1	Refer to removal section.
5	Inner tube	1	Refer to removal section.
6	Outer tube	1	
7	Piston metal	1	
8	Slide metal	1	
9	Oil seal washer	1	
10	Oil seal	1	
11	Base valve	1	Drain the fork oil. Refer to removal section.
12	Damper assembly	1	Drain the fork oil. Refer to removal section.

HANDLING NOTE

⚠ WARNING

Support the machine securely so there is no danger of it falling over.

TIP

The front fork requires careful attention. So it is recommended that the front fork be maintained at the dealers.

NOTICE

To prevent an accidental explosion of air, the following instructions should be observed:

- **The front fork with a built-in piston rod has a very sophisticated internal construction and is particularly sensitive to foreign material. Use enough care not to allow any foreign material to come in when the oil is replaced or when the front fork is disassembled and reassembled.**
- **Before removing the base valves or front forks, be sure to extract the air from the air chamber completely.**

REMOVING THE DAMPER ASSEMBLY

1. Loosen:
   - Damper assembly "1"

TIP

Before removing the front fork from the machine, loosen the damper assembly with the cap bolt ring wrench "2".

	**Cap bolt ring wrench: YM-01501/90890-01501**

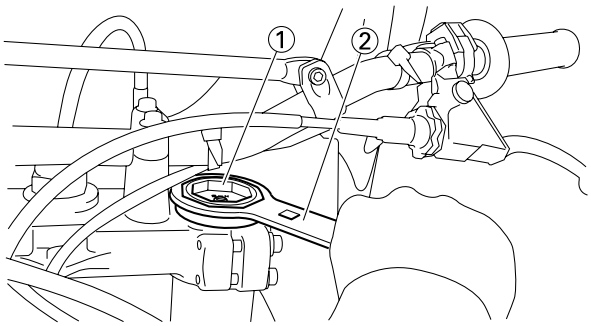

REMOVING THE ADJUSTER

1. Drain the outer tube of its front fork oil at its top.
2. Loosen:
   - Adjuster "1"

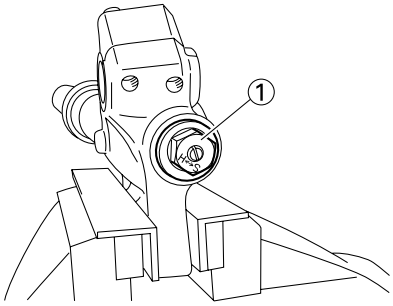

3. Remove:
   - Adjuster "1"

TIP

- While compressing the inner tube "2", set the cap bolt ring wrench "4" between the inner tube and locknut "3".
- Hold the locknut and remove the adjuster.

NOTICE

Do not remove the locknut as the damper rod may go into the damper assembly and not be taken out.

	**Cap bolt ring wrench: YM-01501/90890-01501**

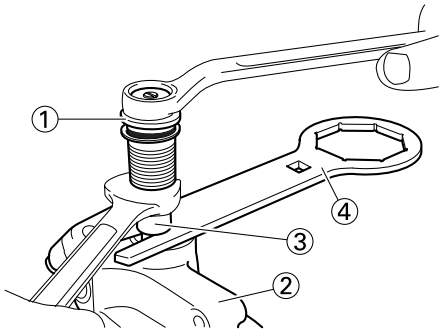

REMOVING THE INNER TUBE

1. Remove:
   - Dust seal "1"
   - Stopper ring "2"
     Using slotted-head screwdriver.

NOTICE

Take care not to scratch the inner tube.

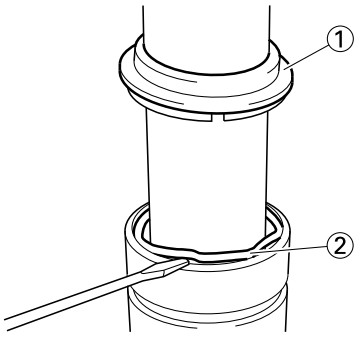

2. Remove:
   • Inner tube "1"

▼▼▼▼▼▼▼▼▼▼▼▼▼▼▼▼▼▼▼▼▼▼▼▼▼▼▼▼▼▼▼▼▼▼

Oil seal removal steps:

a. Push in slowly "a" the inner tube just before it bottoms out and then pull it back quickly "b".
b. Repeat this step until the inner tube can be pulled out from the outer tube.

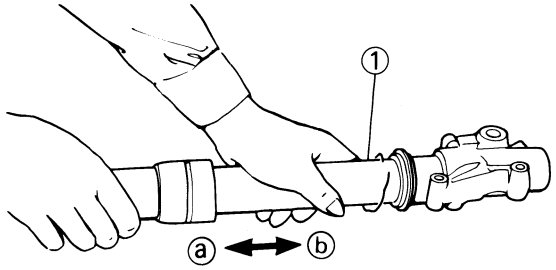

▲▲▲▲▲▲▲▲▲▲▲▲▲▲▲▲▲▲▲▲▲▲▲▲▲▲▲▲▲▲▲▲▲▲

REMOVING THE BASE VALVE

1. Remove:
   • Base valve "1"
     From damper assembly "2".

TIP

Hold the damper assembly with the cap bolt ring wrench "3" and use the cap bolt wrench "4" to remove the base valve.

	Cap bolt wrench: **YM-01500/90890-01500** **Cap bolt ring wrench:** **YM-01501/90890-01501**

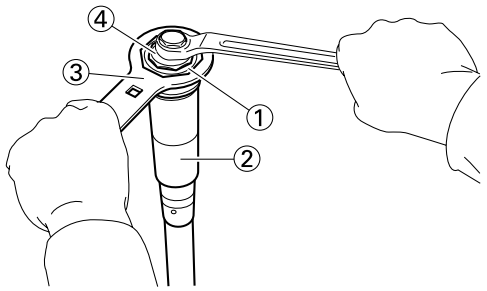

CHECKING THE DAMPER ASSEMBLY

1. Inspect:
   • Damper assembly "1"
     Bend/damage → Replace.
   • O-ring "2"
     Wear/damage → Replace.

NOTICE

The front fork with a built-in piston rod has a very sophisticated internal construction and is particularly sensitive to foreign material.
Use enough care not to allow any foreign material to come in when the oil is replaced or when the front fork is disassembled and reassembled.

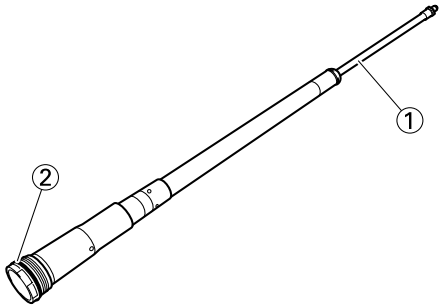

CHECKING THE BASE VALVE

1. Inspect:
   • Base valve "1"
     Wear/damage → Replace.
     Contamination → Clean.
   • O-ring "2"
     Wear/damage → Replace.
   • Piston metal "3"
     Wear/damage → Replace.
   • Spring "4"
     Damage/fatigue → Replace base valve.
   • Air bleed screw "5"
     Wear/damage → Replace.

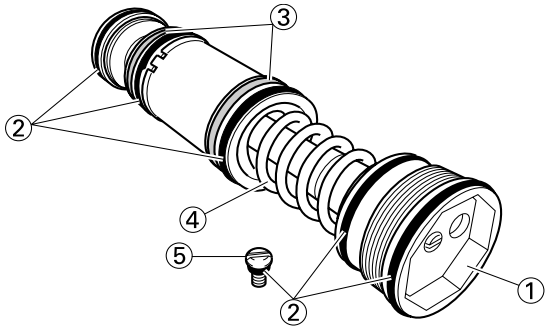

CHECKING THE COLLAR

1. Inspect:
   - Piston metal "1"
     Wear/damage → Replace.

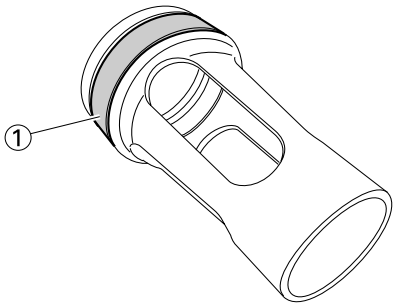

CHECKING THE FORK SPRING

1. Measure:
   - Fork spring free length "a"
     Out of specification → Replace.

	Fork spring free length: **454 mm (17.9 in)** **<Limit>: 449 mm (17.7 in)**

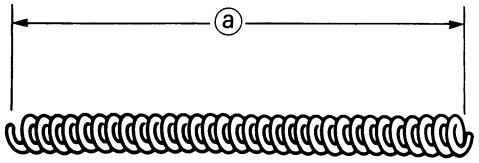

CHECKING THE INNER TUBE

1. Inspect:
   - Inner tube surface "a"
     Score marks → Repair or replace.
     Use #1,000 grit wet sandpaper.
     Damaged oil lock piece → Replace.
   - Inner tube bends
     Out of specification → Replace.
     Use the dial gauge "1".

	Inner tube bending limit: **0.2 mm (0.008 in)**

TIP

The bending value is shown by one half of the dial gauge reading.

⚠ WARNING

Do not attempt to straighten a bent inner tube as this may dangerously weaken the tube.

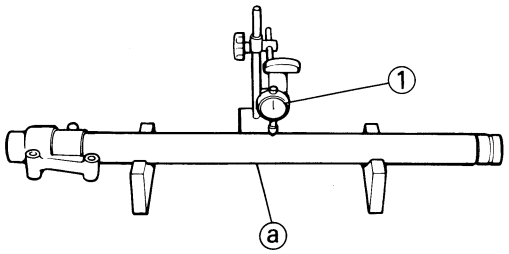

CHECKING THE OUTER TUBE

1. Inspect:
   - Outer tube "1"
     Score marks/wear/damage → Replace.

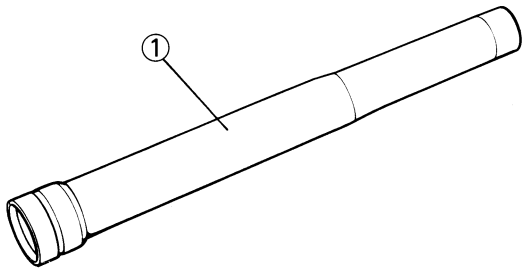

CHECKING THE ADJUSTER

1. Inspect:
   - Adjuster "1"
   - O-ring "2"
     Wear/damage → Replace.

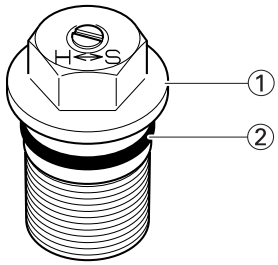

ASSEMBLING THE FRONT FORK

1. Wash the all parts in a clean solvent.
2. Stretch the damper assembly fully.
3. Fill:
   • Front fork oil "1"
   To damper assembly.

	Recommended oil: **Suspension oil "S1"** **Oil capacity:** **199 cm^3 (7.00 Imp oz, 6.73 US oz)**

NOTICE

- **Be sure to use recommended fork oil. If other oils are used, they may have an excessively adverse effect on the front fork performance.**
- **Never allow foreign materials to enter the front fork.**

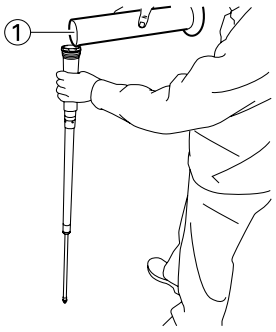

4. After filling, pump the damper assembly "1" slowly up and down (about 200 mm (7.9 in) stroke) several times to bleed the damper assembly of air.

TIP

Be careful not to excessive full stroke. A stroke of 200 mm (7.9 in) or more will cause air to enter. In this case, repeat the steps 2 to 4.

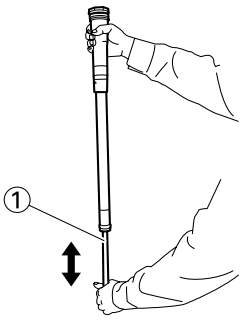

5. Measure:
   • Oil level (left and right) "a"
   Out of specification → Adjust.

	Standard oil level: **145–148 mm (5.71–5.83 in)** **From top of fully stretched damper assembly.**

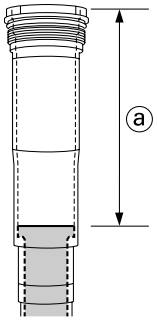

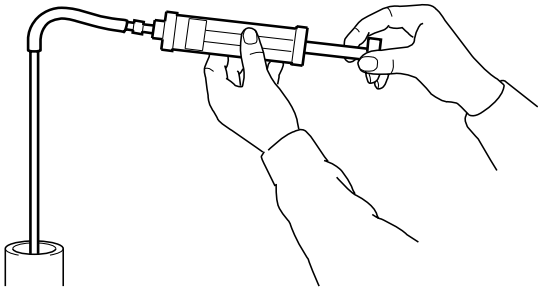

6. Tighten:
   • Locknut "1"

TIP

Fully finger tighten the locknut onto the damper assembly.

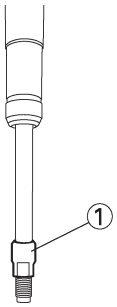

7. Loosen:
   • Compression damping adjuster "1"

TIP
- Loosen the compression damping adjuster finger tight.
- Record the set position of the adjuster (the amount of turning out the fully turned in position).

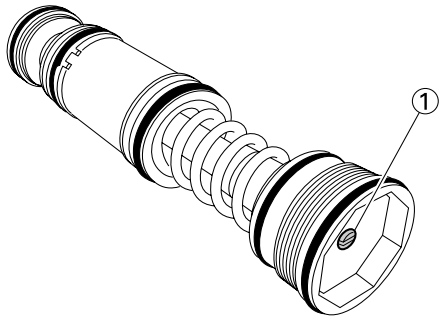

8. Install:
   • Base valve "1"
     To damper assembly "2".

TIP
First bring the damper rod pressure to a maximum. Then install the base valve while releasing the damper rod pressure.

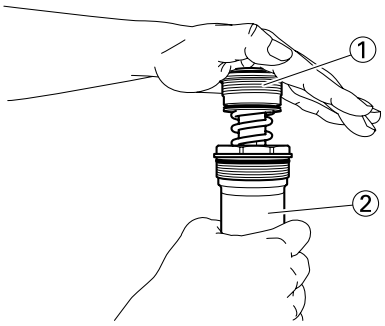

9. Check:
   • Damper assembly
     Not fully stretched → Repeat the steps 2 to 8.
10. Tighten:
   • Base valve "1"

	Base valve: **29 Nm (2.9 m•kg, 21 ft• lb)**

TIP
Hold the damper assembly with the cap bolt ring wrench "2" and use the cap bolt wrench "3" to tighten the base valve with specified torque.

	Cap bolt wrench: **YM-01500/90890-01500** **Cap bolt ring wrench:** **YM-01501/90890-01501**

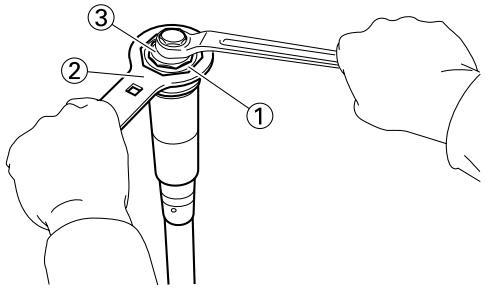

11. After filling, pump the damper assembly "1" slowly up and down more than 10 times to distribute the fork oil.

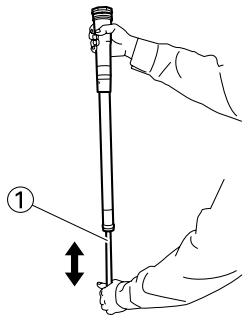

12. While protecting the damper assembly "1" with a rag and compressing fully, allow excessive oil to overflow on the base valve side.

NOTICE
Take care not to damage the damper assembly.



13.Allow the overflowing oil to escape at the hole "a" in the damper assembly.

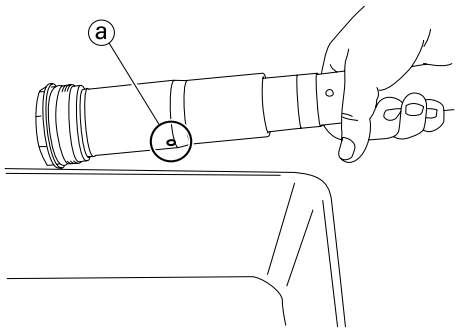

14.Check:
- Damper assembly smooth movement
  Tightness/binding/rough spots → Repeat the steps 2 to 13.

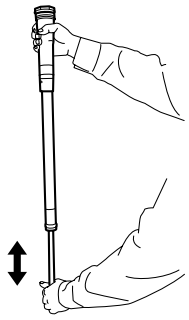

15.Install:
- Dust seal "1"
- Stopper ring "2"
- Oil seal "3" New
- Oil seal washer "4"
- Slide metal "5" New
  To inner tube "6".

TIP
- Apply the fork oil on the inner tube.
- When installing the oil seal, use vinyl seat "a" with fork oil applied to protect the oil seal lip.
- Install the oil seal with its manufacture's marks or number facing the axle holder side.

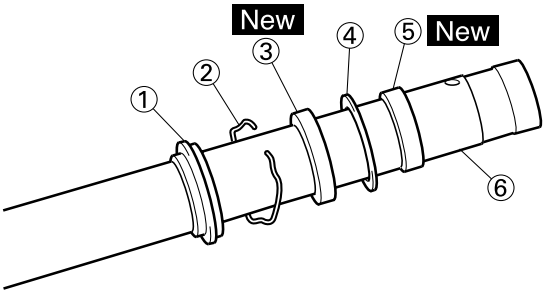

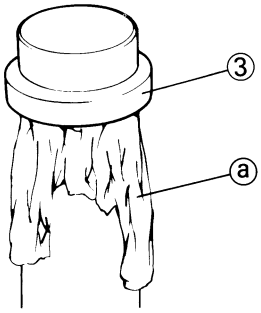

16.Install:
- Piston metal "1" New

TIP
Install the piston metal onto the slot on inner tube.

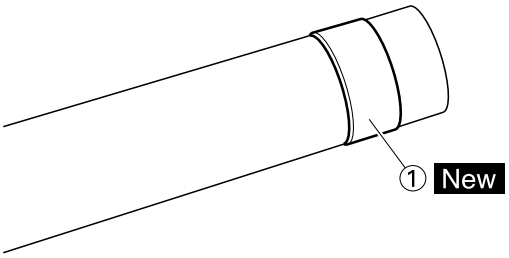

17.Install:
- Outer tube "1"
  To inner tube "2".

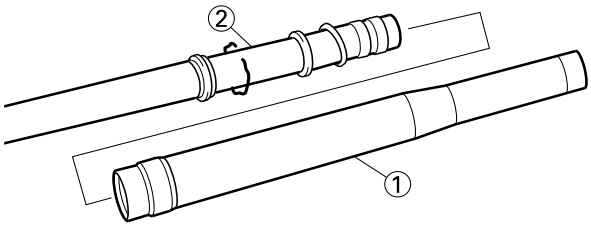

18.Install:
- Slide metal "1"
- Oil seal washer "2"
  To outer tube slot.

TIP
Press the slide metal into the outer tube with fork seal driver "3".

	Fork seal driver: **YM-A0948/90890-01502**

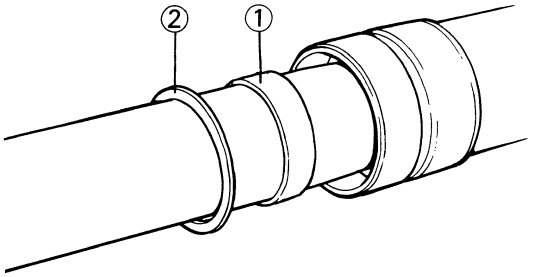

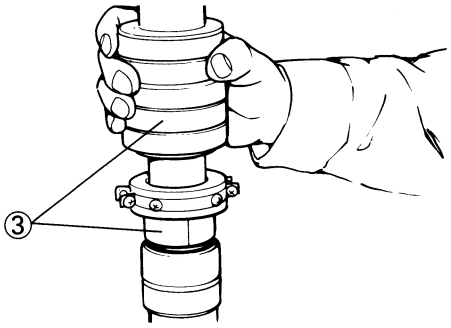

19.Install:
- Oil seal "1"

TIP
Press the oil seal into the outer tube with fork seal driver "2".

	Fork seal driver: **YM-A0948/90890-01502**

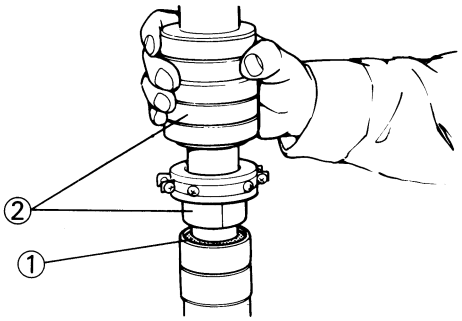

20.Install:
- Stopper ring "1"

TIP
Fit the stopper ring correctly in the groove in the outer tube.

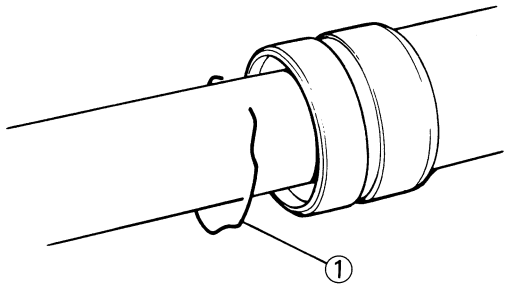

21.Install:
- Dust seal "1"

TIP
Apply the lithium soap base grease on the inner tube.

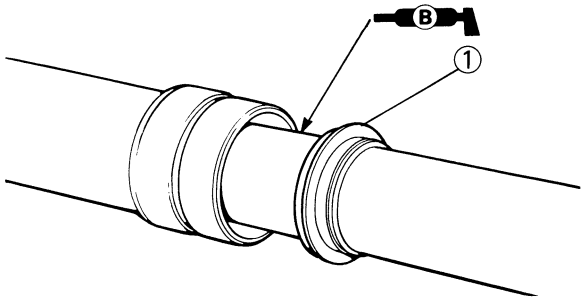

22.Check:
- Inner tube smooth movement
  Tightness/binding/rough spots → Repeat the steps 15 to 21.

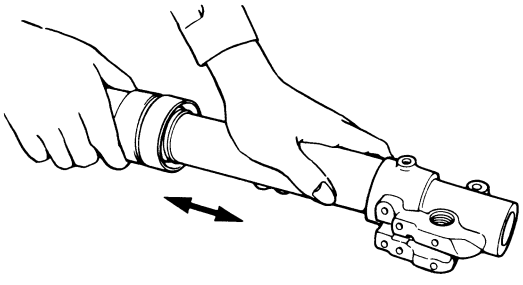

23.Measure:
- Distance "a"
  Out of specification → Turn into the locknut.

	Distance "a": **16 mm (0.63 in) or more** **Between the damper assembly "1" bottom and locknut "2" bottom.**

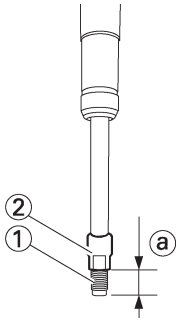

24.Install:
- Collar "1"
- Fork spring "2"
  To damper assembly "3".

TIP
Install the collar with its larger dia. end "a" facing the fork spring.

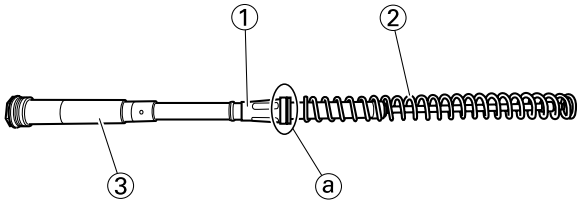

25.Install:
- Damper assembly "1"
  To inner tube "2".

NOTICE
To install the damper assembly into the inner tube, hold the inner tube aslant. If the inner tube is held vertically, the damper assembly may fall into it, damaging the valve inside.

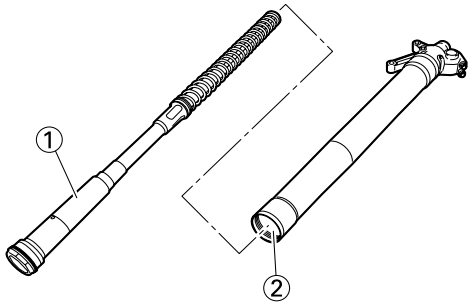

26.Loosen:
- Rebound damping adjuster "1"

TIP
- Loosen the rebound damping adjuster finger tight.
- Record the set position of the adjuster (the amount of turning out the fully turned in position).

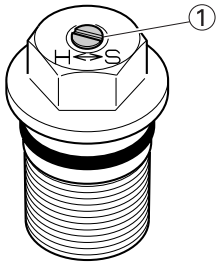

27.Install:
- Push rod "1"
- Copper washer "2" New
- Adjuster "3"
  To damper assembly "4".

TIP
- While compressing the inner tube "5", set the cap bolt ring wrench "7" between the inner tube and locknut "6".
- Fully finger tighten the adjuster onto the damper assembly.

	Cap bolt ring wrench: **YM-01501/90890-01501**

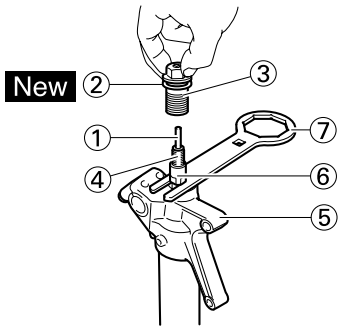

28.Inspect:
- Gap "a" between the adjuster "1" and locknut "2".
  Out of specification → Retighten and readjust the locknut.

	Gap "a" between the adjuster and locknut: **0.5–1.0 mm (0.02–0.04 in)**

TIP
If the adjuster is installed out of specification, proper damping force cannot be obtained.

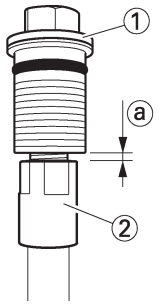

29.Tighten:
- Adjuster (locknut) "1"

	Adjuster (locknut): **29 Nm (2.9 m•kg, 21 ft•lb)**

TIP
Hold the locknut "2" and tighten the adjuster with specified torque.

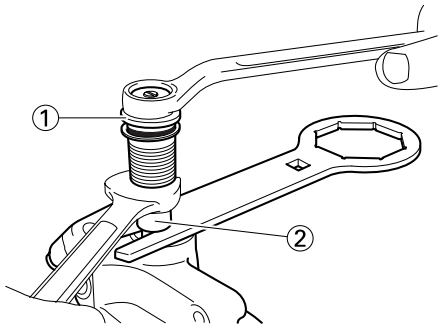

30.Install:
- Adjuster "1"

	Adjuster: **55 Nm (5.5 m•kg, 40 ft•lb)**

To inner tube.

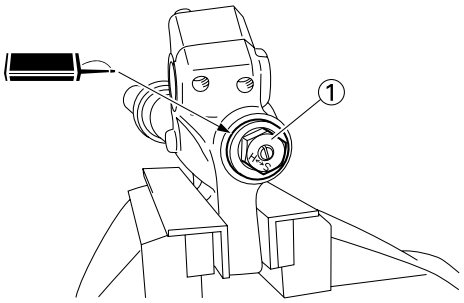

31.Fill:
- Front fork oil "1"
  From outer tube top.

	Recommended oil: **Suspension oil "S1"** **Standard oil amount:** **333 cm^3 (11.72 Imp oz, 11.26 US oz)** ***335 cm^3 (11.79 Imp oz, 11.33 US oz)** **Extent of adjustment:** **300–375 cm^3 (10.6–13.2 Imp oz, 10.1–12.7 US oz)**

* For EUROPE

⚠ WARNING
Never fail to make the oil amount adjustment between the maximum and minimum amount and always adjust each front fork to the same setting. Uneven adjustment can cause poor handling and loss of stability.

NOTICE
- **Be sure to use recommended fork oil. If other oils are used, they may have an excessively adverse effect on the front fork performance.**
- **Never allow foreign materials to enter the front fork.**

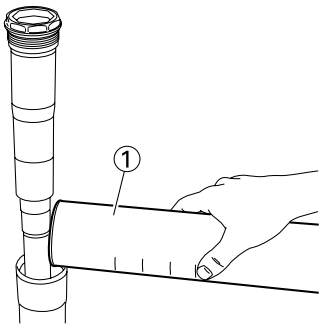

32.Install:
• Damper assembly "1"
To outer tube.

TIP
Temporarily tighten the damper assembly.

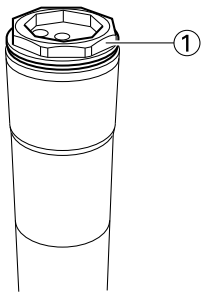

33.Install:
• Protector guide "1"

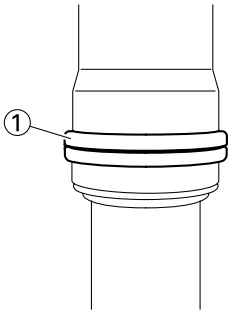

INSTALLING THE FRONT FORK
1. Install:
• Front fork "1"

TIP
• Temporarily tighten the pinch bolts (lower bracket).
• Do not tighten the pinch bolts (upper bracket) yet.

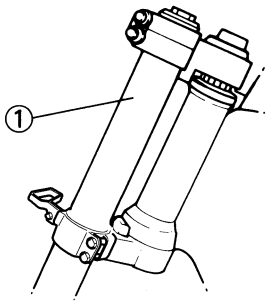

2. Tighten:
• Damper assembly "1"

	Damper assembly: 30 Nm (3.0 m•kg, 22 ft•lb)

TIP
Use the cap bolt ring wrench "2" to tighten the damper assembly with specified torque.

	Cap bolt ring wrench: YM-01501/90890-01501

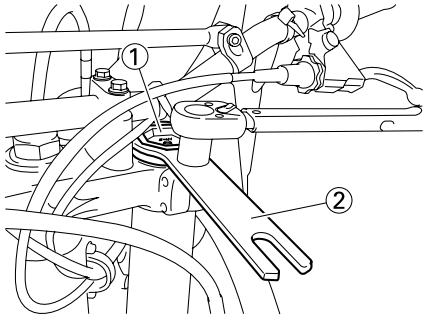

3. Adjust:
• Front fork top end "a"

	Front fork top end (standard) "a": 5 mm (0.20 in)

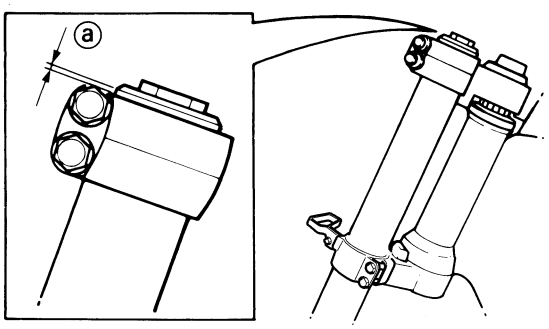

4. Tighten:
   • Pinch bolt (upper bracket) "1"

	Pinch bolt (upper bracket): 21 Nm (2.1 m•kg, 15 ft•lb)

   • Pinch bolt (lower bracket) "2"

	Pinch bolt (lower bracket): 21 Nm (2.1 m•kg, 15 ft•lb)

⚠ WARNING

Tighten the lower bracket to specified torque. If torqued too much, it may cause the front fork to malfunction.

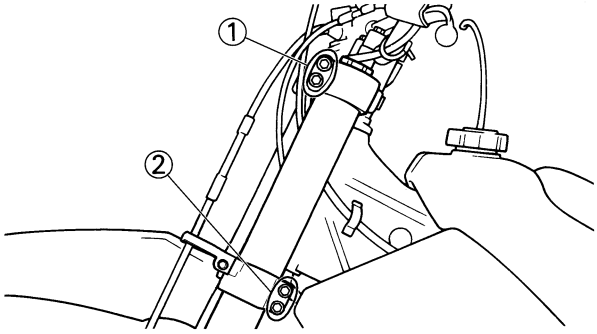

5. Install:
   • Protector "1"
   • Bolt (protector) "2"

	Bolt (protector): 5 Nm (0.5 m•kg, 3.6 ft•lb)

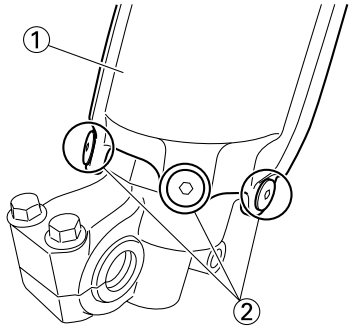

6. Adjust:
   • Rebound damping force

TIP

Turn in the damping adjuster "1" finger-tight and then turn out to the originally set position.

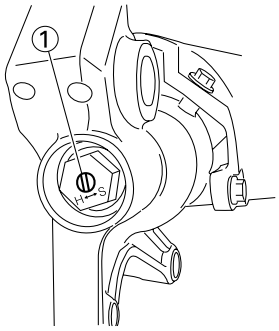

7. Adjust:
   • Compression damping force

TIP

Turn in the damping adjuster "1" finger-tight and then turn out to the originally set position.

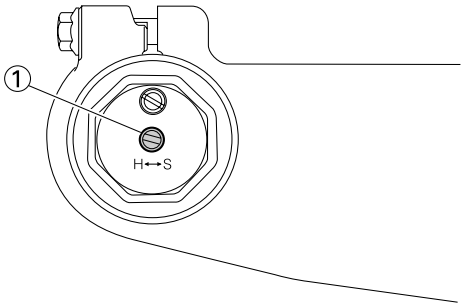

HANDLEBAR

REMOVING THE HANDLEBAR

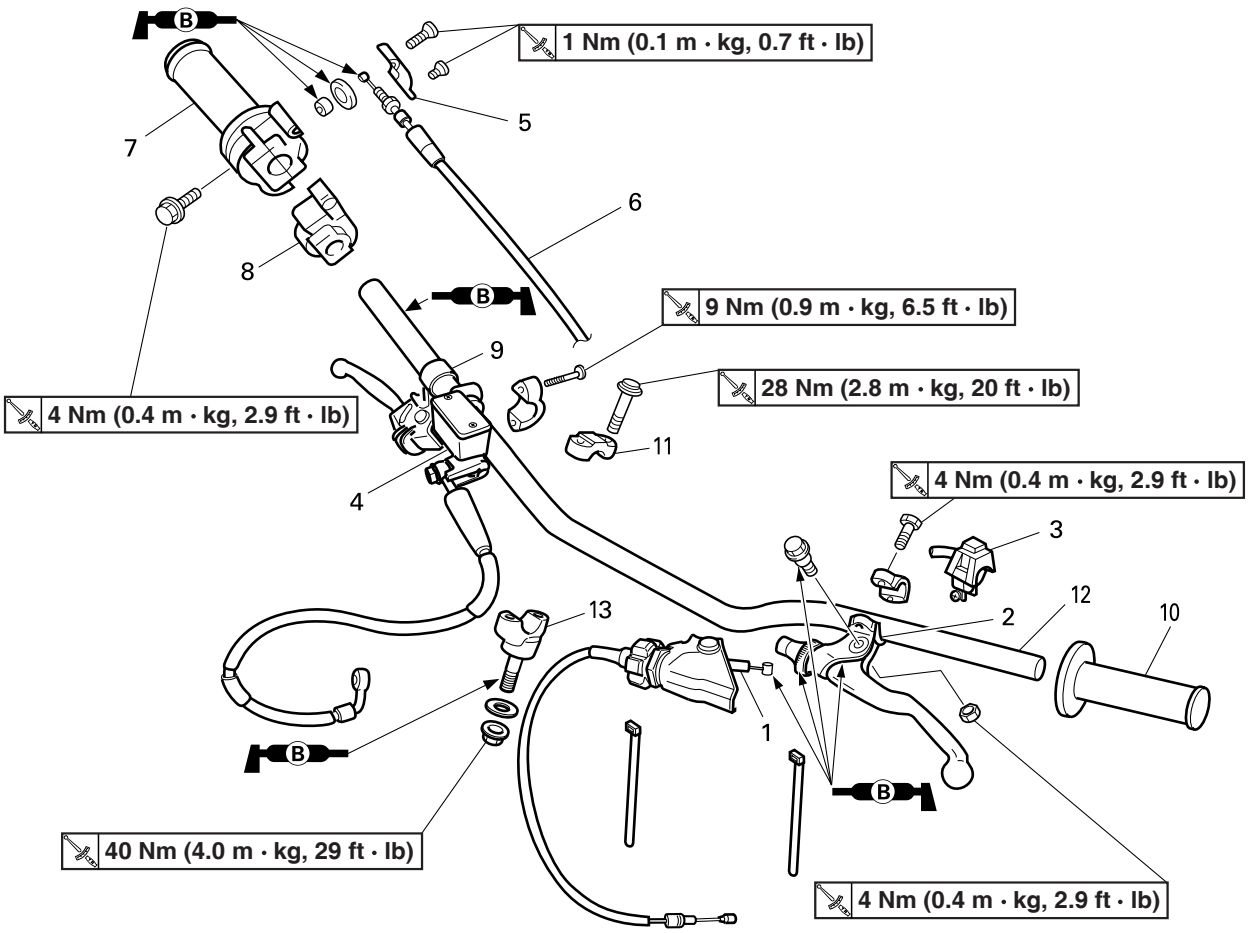

Order	Part name	Q'ty	Remarks
	Number plate		Remove the band only.
1	Clutch cable	1	Disconnect at the lever side.
2	Clutch lever holder	1	
3	Engine stop switch	1	
4	Brake master cylinder	1	Refer to removal section.
5	Throttle cable cap	1	Turn over the cap cover.
6	Throttle cable	1	Disconnect at the throttle side.
7	Throttle	1	Loosen the bolts.
8	Cap cover	1	
9	Collar	1	
10	Left grip	1	Refer to removal section.
11	Handlebar upper holder	2	
12	Handlebar	1	
13	Handlebar lower holder	2	

DISASSEMBLING THE THROTTLE

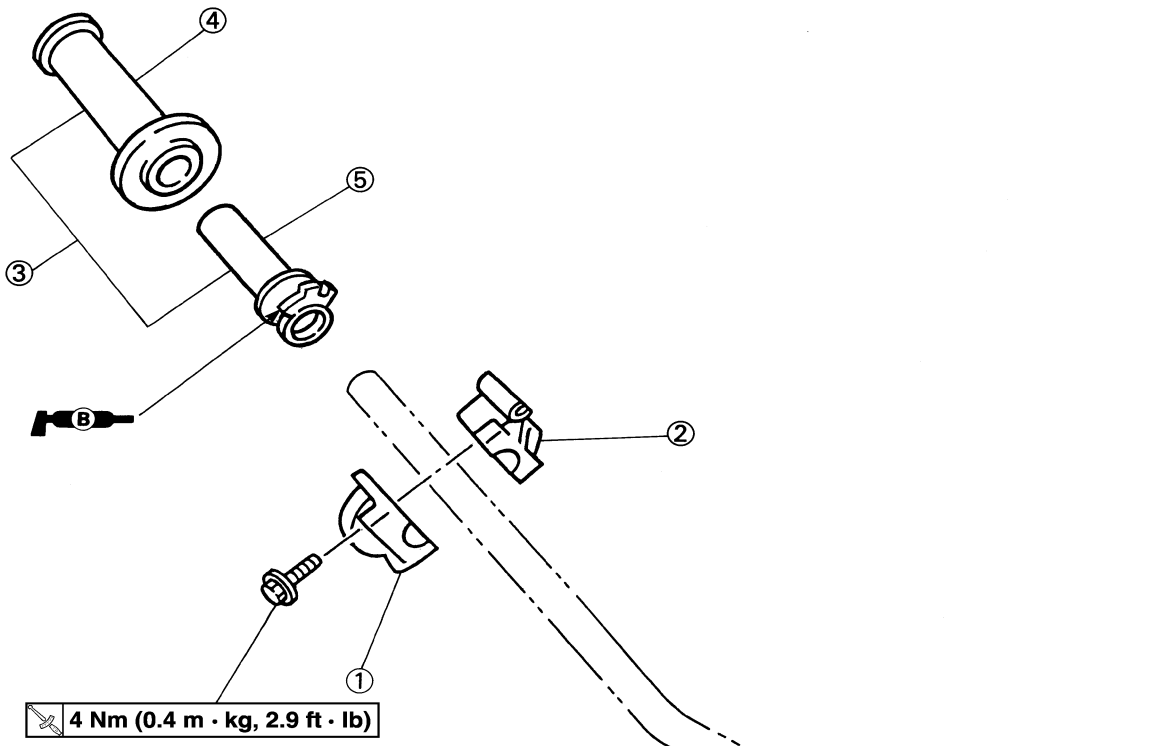

Order	Part name	Q'ty	Remarks
1	Grip cap (lower)	1	
2	Grip cap (upper)	1	
3	Grip assembly	1	
4	Grip (right)	1	Refer to removal section.
5	Tube guide	1	

REMOVING THE BRAKE MASTER CYLINDER

1. Remove:
   - Brake master cylinder bracket "1"
   - Brake master cylinder "2"

NOTICE

- **Do not let the brake master cylinder hang on the brake hose.**
- **Keep the brake master cylinder cap side horizontal to prevent air from coming in.**

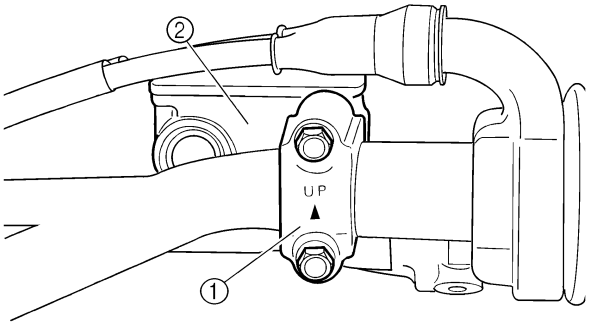

REMOVING THE GRIP

1. Remove:
   - Grip "1"

TIP

Blow in air between the handlebar or tube guide and the grip. Then remove the grip which has become loose.

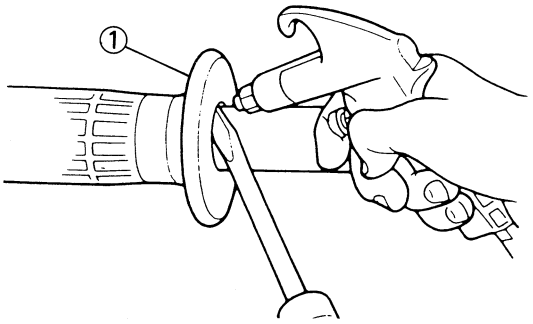

CHECKING THE HANDLEBAR

1. Inspect:
   - Handlebar "1"
     Bends/cracks/damage → Replace.

⚠ WARNING

Do not attempt to straighten a bent handlebar as this may dangerously weaken the handlebar.

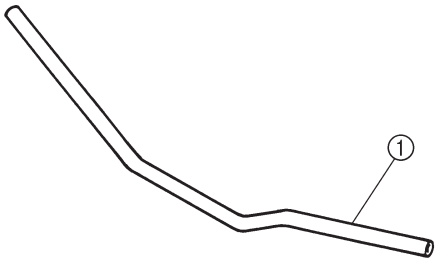

ASSEMBLING THE THROTTLE

1. Remove:
   - Grip (right) "1"
     Apply the adhesive on the tube guide "2".

TIP

- Before applying the adhesive, wipe off grease or oil on the tube guide surface "a" with a lacquer thinner.
- Align the mating mark "b" on the grip (right) with the slot "c" in the tube guide.

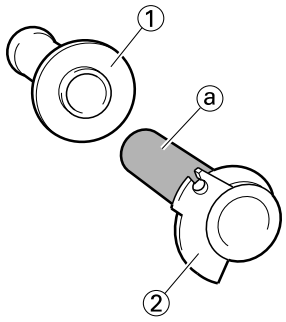

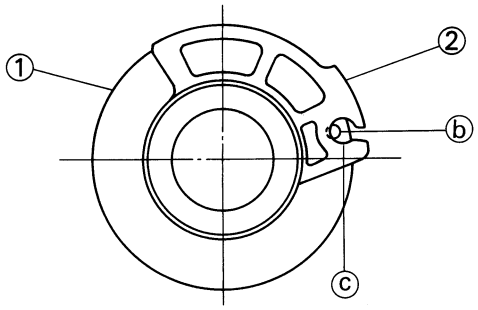

2. Install:
   • Grip cap (upper) "1"
   • Grip cap (lower) "2"
   • Bolt (grip cap) "3"

TIP
Temporarily tighten the bolts (grip cap).

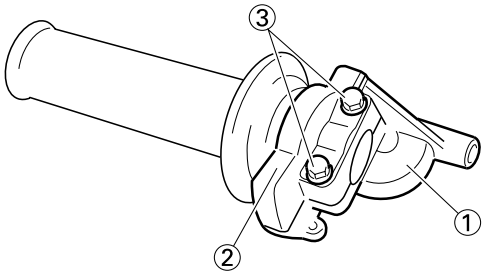

INSTALLING THE HANDLEBAR

1. Install:
   • Handlebar lower holder "1"
   • Washer "2"
   • Nut (handlebar lower holder) "3"

TIP
- Install the handlebar lower holder with its side having the greater distance "a" from the mounting bolt center facing forward.
- Apply the lithium soap base grease on the thread of the handlebar lower holder.
- Installing the handlebar lower holder in the reverse direction allows the front-to-rear offset amount of the handlebar position to be changed.
- Do not tighten the nut yet.

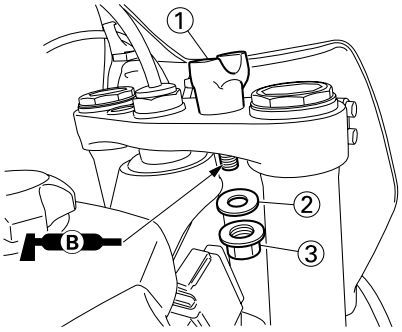

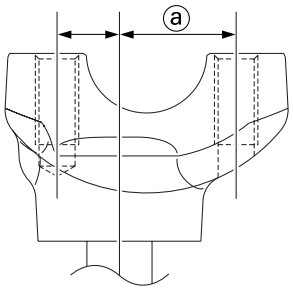

2. Install:
   • Handlebar "1"
   • Handlebar upper holder "2"
   • Bolt (handlebar upper holder) "3"

	**Bolt (handlebar upper holder): 28 Nm (2.8 m•kg, 20 ft•lb)**

TIP
- The handlebar upper holder should be installed with the punched mark "a" forward.
- Install the handlebar so that the marks "b" are in place on both sides.
- Install the handlebar so that the projection "c" of the handlebar upper holder is positioned at the mark on the handlebar as shown.
- First tighten the bolts on the front side of the handlebar upper holder, and then tighten the bolts on the rear side.

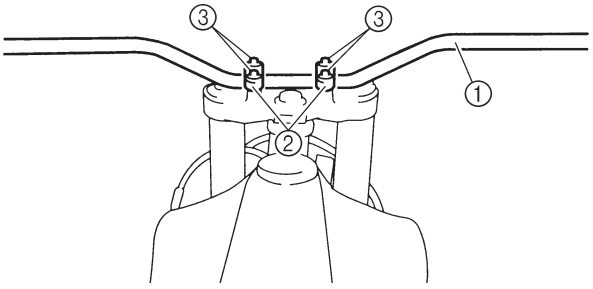

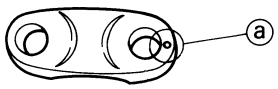

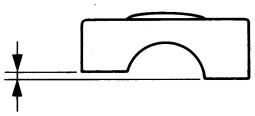

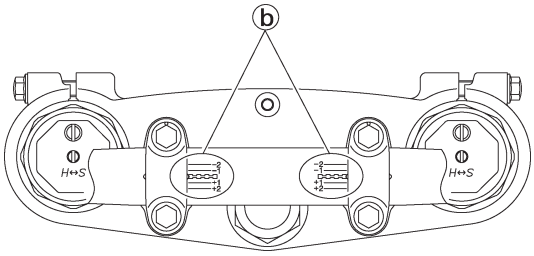

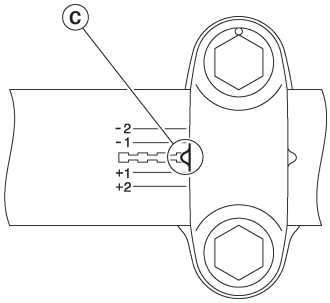

3. Tighten:
   • Nut (handlebar lower holder) "1"

	Nut (handlebar lower holder): 40 Nm (4.0 m•kg, 29 ft•lb)

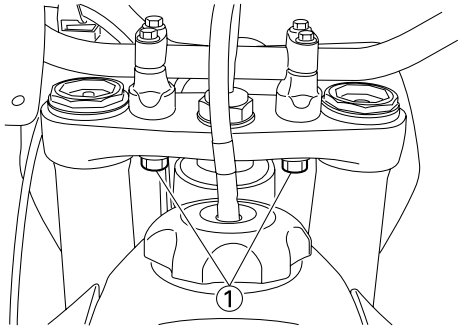

4. Install:
   • Left grip "1"
     Apply the adhesive to the handlebar "2".

TIP
- Before applying the adhesive, wipe off grease or oil on the handlebar surface "a" with a lacquer thinner.
- Install the left grip to the handlebar so that the line "b" between the two arrow marks faces straight upward.

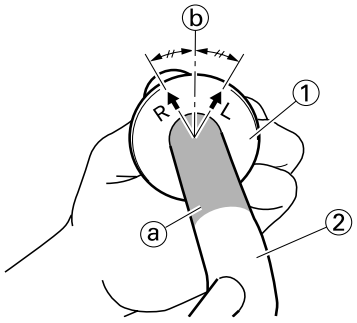

5. Install:
   • Collar "1"
   • Grip cap cover "2"
   • Throttle grip "3"

TIP
- Apply the lithium soap base grease on the throttle grip sliding surface.
- Tighten the grip cap bolts temporarily without the throttle being fixed to the handlebar.

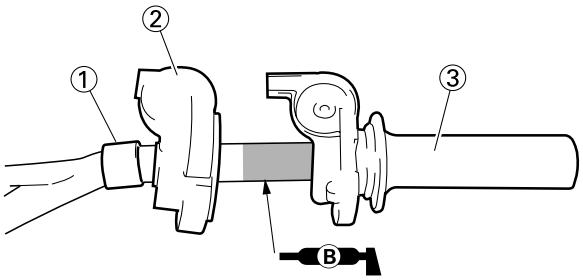

6. Install:
   • Throttle cables "1"
     To tube guide "2".

TIP
Apply the lithium soap base grease on the throttle cable end and tube guide cable winding portion.

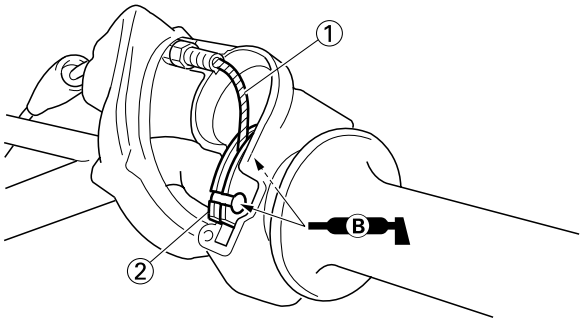

7. Install:
   • Roller "1"
   • Collar "2"

TIP
- Apply the lithium soap base grease on the roller sliding surface and cable guide.
- Install the roller so that the "UPPER" mark "a" faces upward.
- Pass the throttle cable in the groove "b" in the roller.

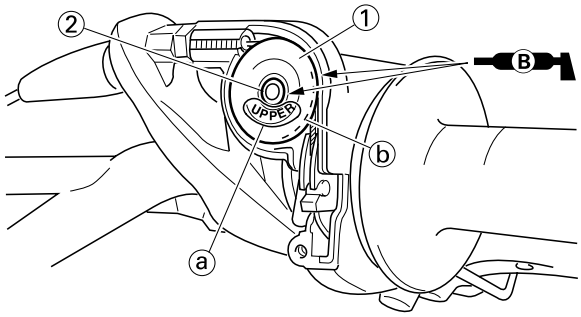

8. Install:
   • Throttle cable cap "1"
   • Screw (throttle cable cap) "2"

	Screw (throttle cable cap): 1 Nm (0.1 m•kg, 0.7 ft•lb)

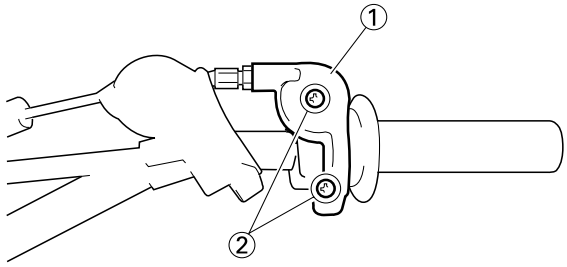

9. Adjust:
   • Throttle grip free play
   Refer to "ADJUSTING THE THROTTLE CABLE FREE PLAY" section in the CHAPTER 3.

10. Install:
   • Cap cover "1"

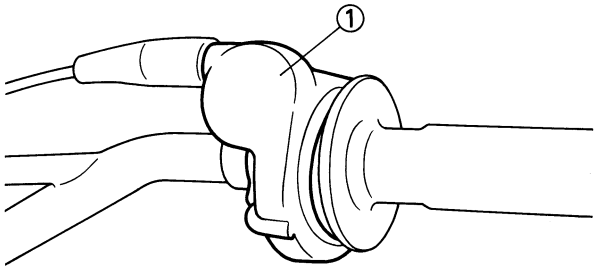

11. Install:
   • Brake master cylinder "1"
   • Brake master cylinder bracket "2"
   • Bolt (brake master cylinder bracket) "3"

	Bolt (brake master cylinder bracket): 9 Nm (0.9 m•kg, 6.5 ft•lb)

TIP
- Install the bracket so that the arrow mark "a" faces upward.
- First tighten the bolt on the upper side of the brake master cylinder bracket, and then tighten the bolt on the lower side.

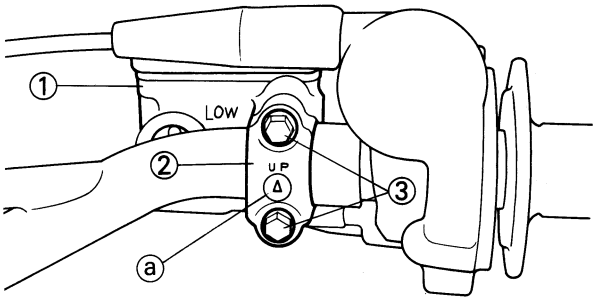

12. Install:
   • Bolt (grip cap) "1"

	Bolt (grip cap): 4 Nm (0.4 m•kg, 2.9 ft•lb)

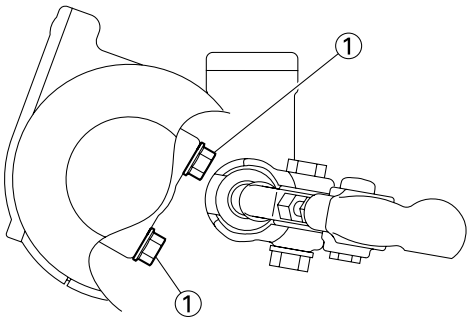

⚠ WARNING

After tightening the bolts, check that the throttle grip "2" moves smoothly. If it does not, retighten the bolts for adjustment.

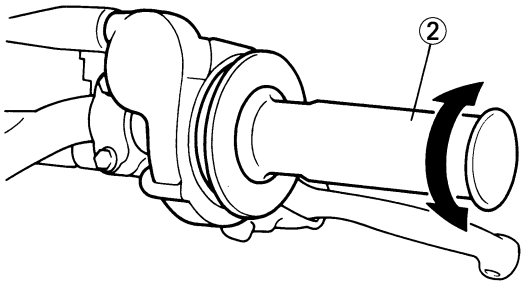

13.Install:
- Engine stop switch "1"
- Clutch lever holder "2"
- Bolt (clutch lever holder) "3"

	Bolt (clutch lever holder): 4 Nm (0.4 m•kg, 2.9 ft•lb)

- Clamp "4"

TIP
- The engine stop switch, clutch lever holder and clamp should be installed according to the dimensions shown.
- Pass the engine stop switch lead in the middle of the clutch lever holder.

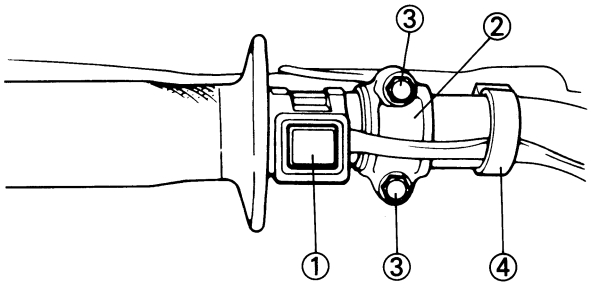

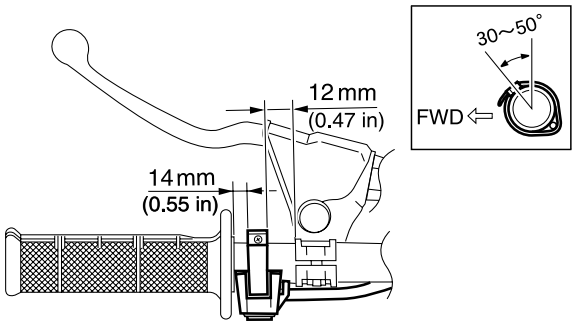

14.Install:
- Clutch cable "1"

TIP
Apply the lithium soap base grease on the clutch cable end.

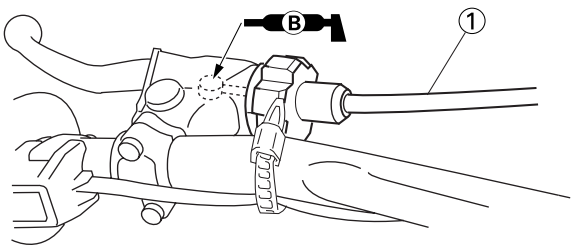

15.Adjust:
- Clutch lever free play
  Refer to "ADJUSTING THE CLUTCH CABLE FREE PLAY" section in the CHAPTER 3.

STEERING

REMOVING THE STEERING

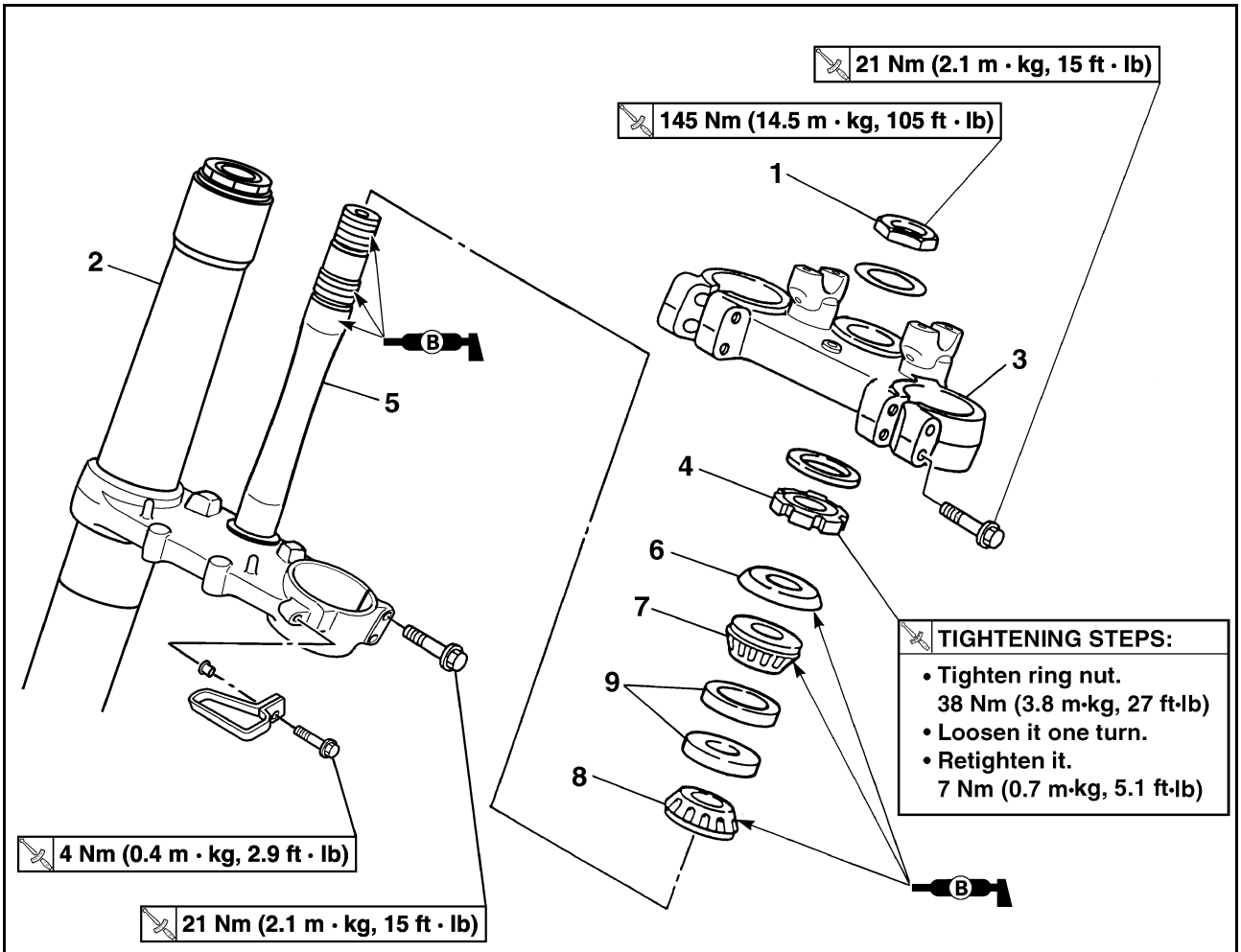

Order	Part name	Q'ty	Remarks
			TIGHTENING STEPS: • Tighten ring nut. 38 Nm (3.8 m•kg, 27 ft•lb) • Loosen it one turn. • Retighten it. 7 Nm (0.7 m•kg, 5.1 ft•lb)
	Hold the machine by placing the suitable stand under the engine.		Refer to "HANDLING NOTE".
	Number plate		Refer to "SEAT, FUEL TANK AND SIDE COVERS" section in the CHAPTER 4.
	Handlebar		Refer to "HANDLEBAR" section.
	Front fender		
1	Steering stem nut	1	
2	Front fork	2	Refer to "FRONT FORK" section.
3	Upper bracket	1	

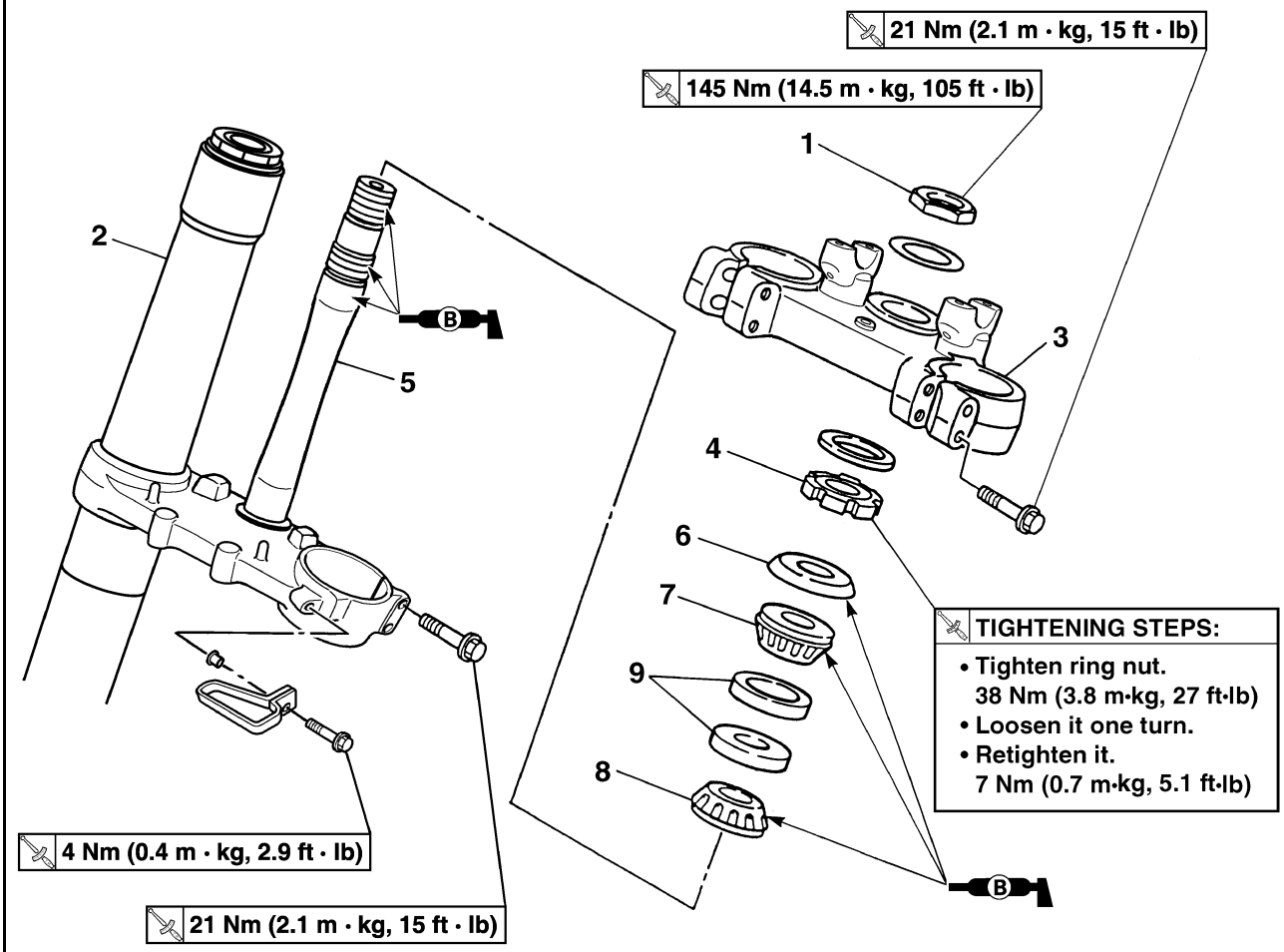

Order	Part name	Q'ty	Remarks
4	Steering ring nut	1	Refer to removal section.
5	Lower bracket	1	
6	Bearing race cover	1	
7	Upper bearing	1	
8	Lower bearing	1	Refer to removal section.
9	Bearing race	2	Refer to removal section.

HANDLING NOTE

⚠ WARNING

Support the machine securely so there is no danger of it falling over.

REMOVING THE STEERING RING NUT

1. Remove:
   • Steering ring nut "1"
   Use the steering nut wrench "2".

	Steering nut wrench: YU-33975/90890-01403

⚠ WARNING

Support the steering stem so that it may not fall down.

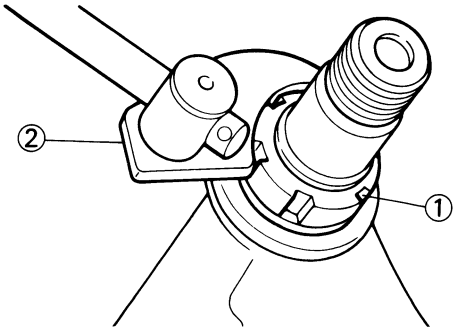

REMOVING THE LOWER BEARING

1. Remove:
   • Lower bearing "1"
   Use the floor chisel "2".

NOTICE

Take care not to damage the steering shaft thread.

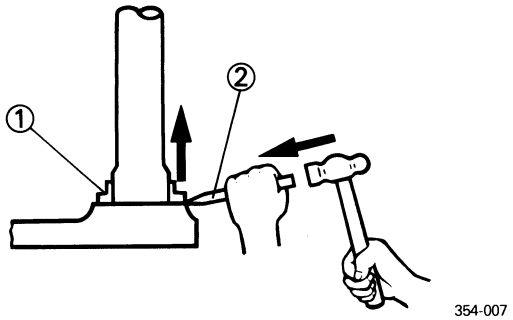

354-007

REMOVING THE BEARING RACE

1. Remove:
   • Bearing race "1"
   Remove the bearing race using long rod "2" and the hammer.

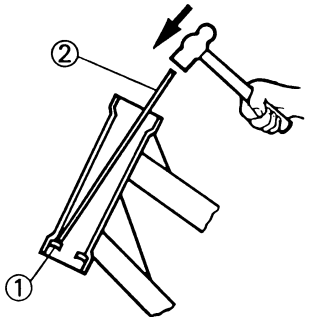

354-005

CHECKING THE STEERING STEM

1. Inspect:
   • Steering stem "1"
   Bend/damage → Replace.

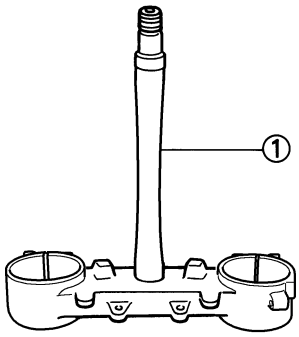

CHECKING THE BEARING AND BEARING RACE

1. Wash the bearings and bearing races with a solvent.
2. Inspect:
   • Bearing "1"
   • Bearing race
   Pitting/damage → Replace bearings and bearing races as a set.
   Install the bearing in the bearing races. Spin the bearings by hand. If the bearings hang up or are not smooth in their operation in the bearing races, replace bearings and bearing races as a set.

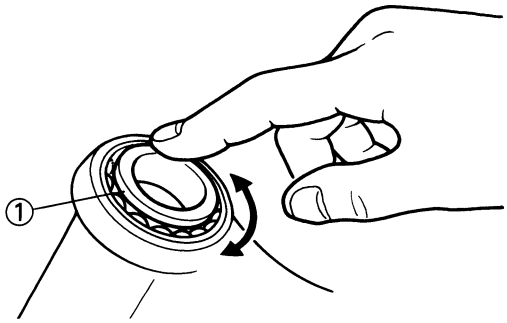

INSTALLING THE LOWER BRACKET

1. Install:
   • Lower bearing "1"

TIP
Apply the lithium soap base grease on the dust seal lip and bearing inner circumference.

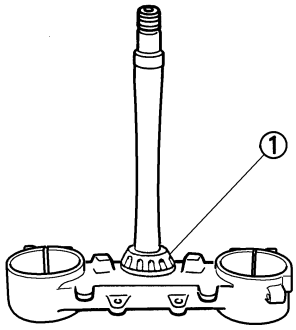

2. Install:
   • Bearing race
   • Upper bearing "1"
   • Bearing race cover "2"

TIP
Apply the lithium soap base grease on the bearing and bearing race cover lip.

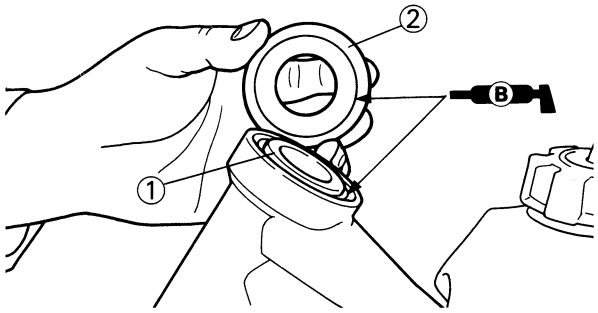

3. Install:
   • Lower bracket "1"

TIP
Apply the lithium soap base grease on the bearing, the portion "a" and thread of the steering stem.

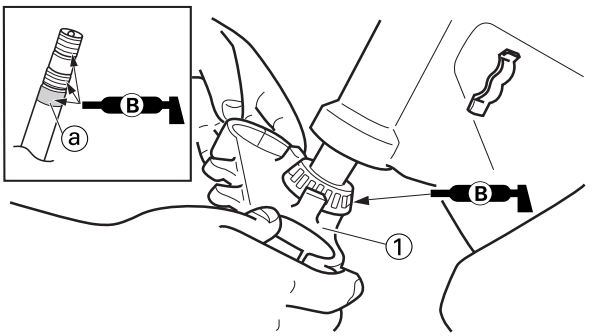

4. Install:
   • Steering ring nut "1"

	Steering ring nut: **7 Nm (0.7 m•kg, 5.1 ft•lb)**

Tighten the steering ring nut using the steering nut wrench "2".
Refer to "CHECKING AND ADJUSTING THE STEERING HEAD" section in the CHAPTER 3.

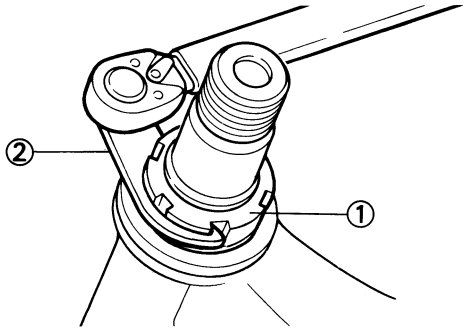

5. Check the steering stem by turning it lock to lock. If there is any binding, remove the steering stem assembly and inspect the steering bearings.

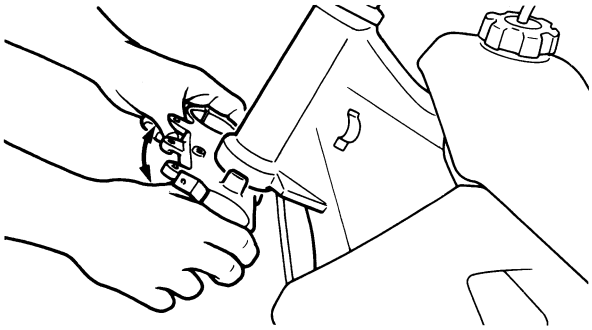

6. Install:
   • Washer "1"

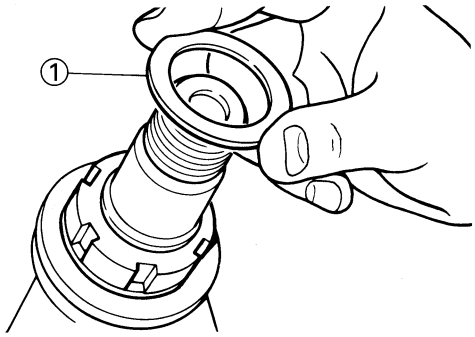

7. Install:
   • Front fork "1"
   • Upper bracket "2"

TIP
- Temporarily tighten the pinch bolts (lower bracket).
- Do not tighten the pinch bolts (upper bracket) yet.

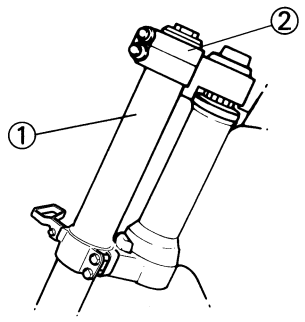

8. Install:
   • Washer "1"
   • Steering stem nut "2"

	Steering stem nut: 145 Nm (14.5 m•kg, 105 ft•lb)

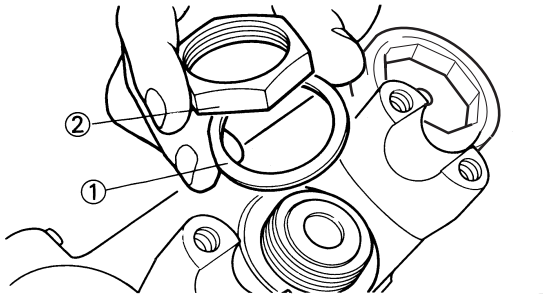

9. After tightening the nut, check the steering for smooth movement. If not, adjust the steering by loosening the steering ring nut little by little.
10. Adjust:
   • Front fork top end "a"

	Front fork top end (standard) "a": 5 mm (0.20 in)

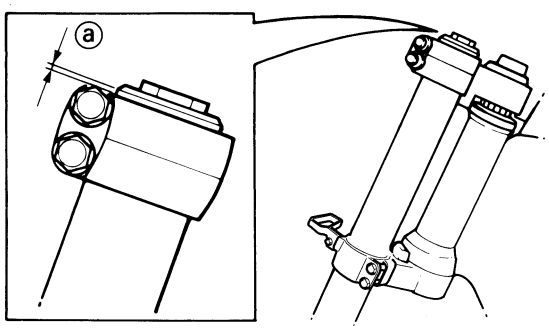

11. Tighten:
   • Pinch bolt (upper bracket) "1"

	Pinch bolt (upper bracket): 21 Nm (2.1 m•kg, 15 ft•lb)

   • Pinch bolt (lower bracket) "2"

	Pinch bolt (lower bracket): 21 Nm (2.1 m•kg, 15 ft•lb)

⚠ WARNING

Tighten the lower bracket to specified torque. If torqued too much, it may cause the front fork to malfunction.

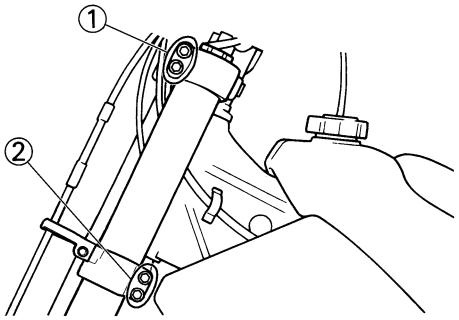

SWINGARM

REMOVING THE SWINGARM

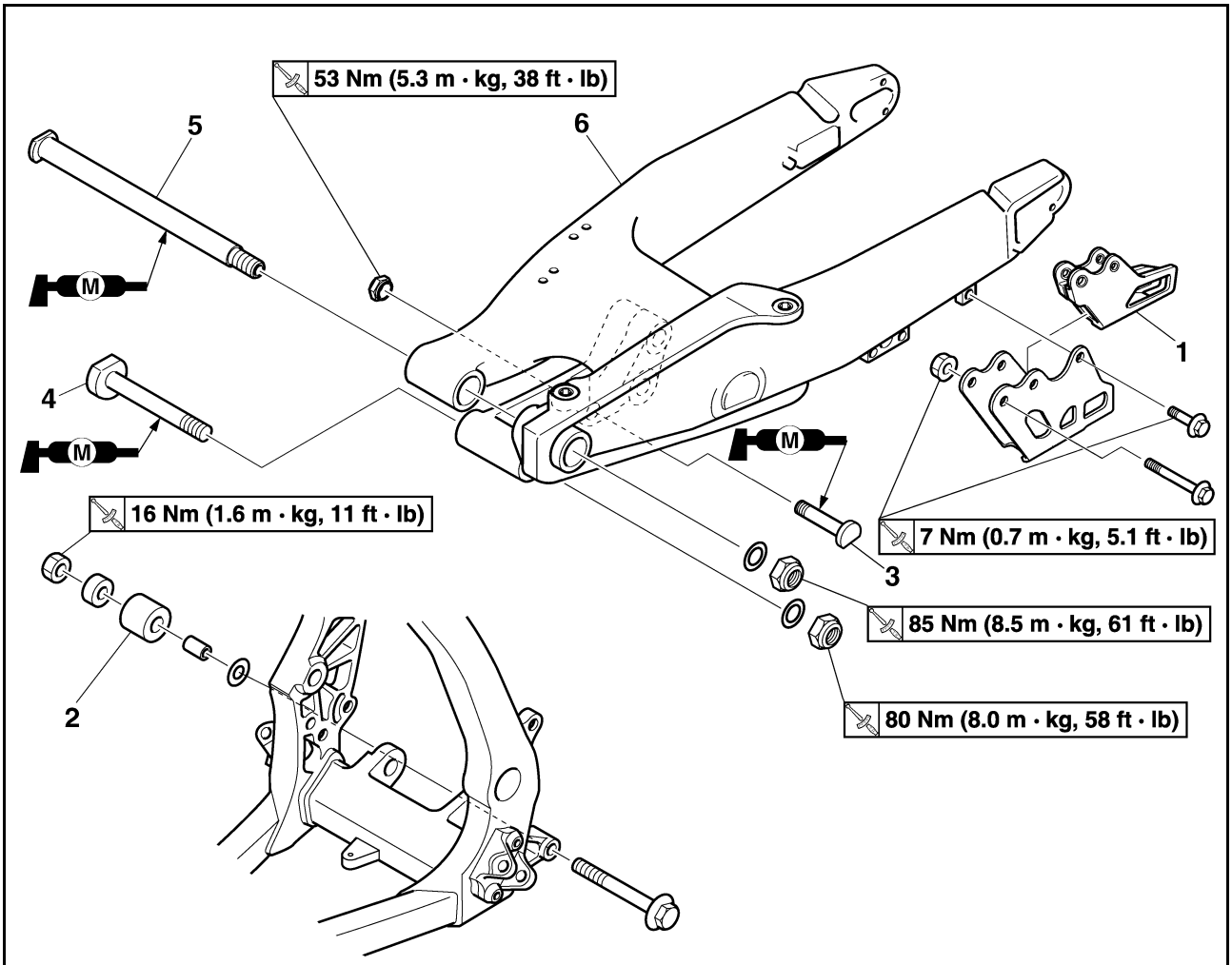

Order	Part name	Q'ty	Remarks
	Hold the machine by placing the suitable stand under the engine.		Refer to "HANDLING NOTE".
	Brake hose holder		Refer to "FRONT BRAKE AND REAR BRAKE" section.
	Rear brake caliper		Refer to "FRONT BRAKE AND REAR BRAKE" section.
	Bolt (brake pedal)		Shift the brake pedal backward.
	Drive chain		
1	Drive chain support	1	
2	Lower chain tensioner	1	
3	Bolt (rear shock absorber-relay arm)	1	Hold the swingarm.
4	Bolt (connecting rod)	1	
5	Pivot shaft	1	
6	Swingarm	1	

DISASSEMBLING THE SWINGARM

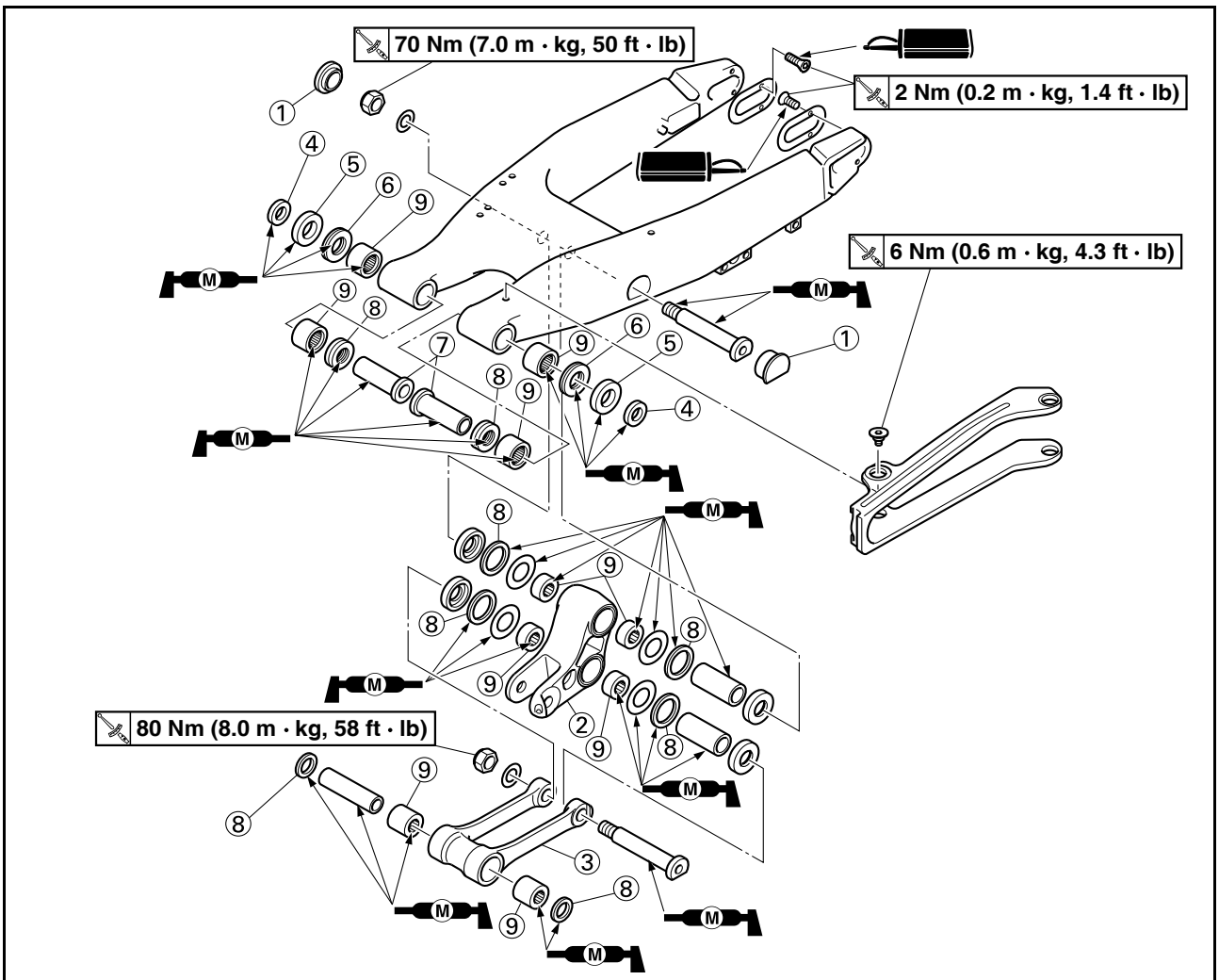

Order	Part name	Q'ty	Remarks
1	Cap	2	Refer to removal section.
2	Relay arm	1	
3	Connecting rod	1	
4	Collar	2	
5	Oil seal	2	
6	Thrust bearing	2	
7	Bushing	2	
8	Oil seal	8	
9	Bearing	10	Refer to removal section.

HANDLING NOTE

⚠ WARNING

Support the machine securely so there is no danger of it falling over.

REMOVING THE CAP

1. Remove:
   • Left cap "1"

TIP

Remove with a slotted-head screwdriver inserted under the mark "a" on the left cap.

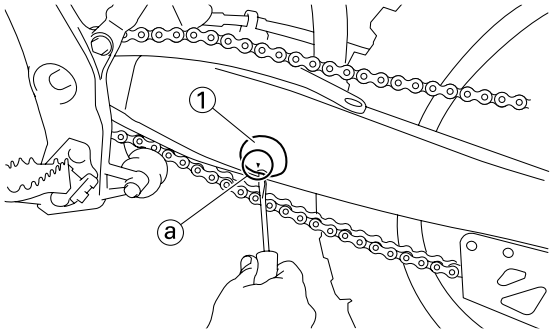

REMOVING THE BEARING

1. Remove:
   • Bearing "1"

TIP

Remove the bearing by pressing its outer race.

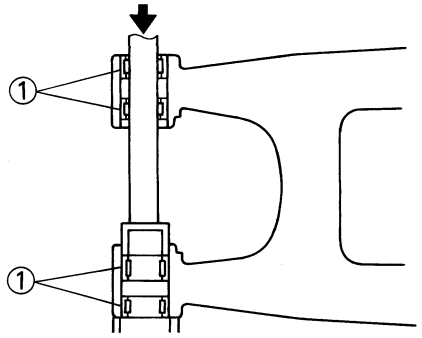

CHECKING THE SWINGARM

1. Inspect:
   • Bearing "1"
   • Bushing "2"
   Free play exists/unsmooth revolution/rust → Replace bearing and bushing as a set.
2. Inspect:
   • Oil seal "3"
   Damage → Replace.

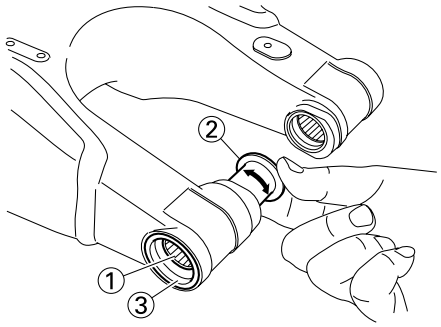

CHECKING THE RELAY ARM

1. Inspect:
   • Bearing "1"
   • Collar "2"
   Free play exists/unsmooth revolution/rust → Replace bearing and collar as a set.
2. Inspect:
   • Oil seal "3"
   Damage → Replace.

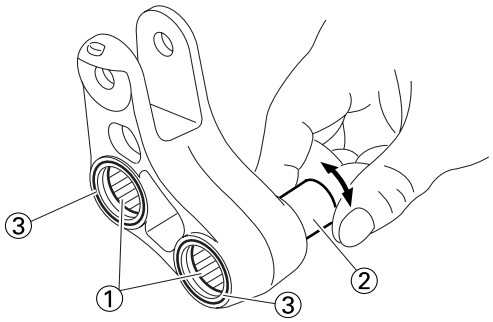

CHECKING THE CONNECTING ROD

1. Inspect:
   • Bearing "1"
   • Collar "2"
   Free play exists/unsmooth revolution/rust → Replace bearing and collar as a set.
2. Inspect:
   • Oil seal "3"
   Damage → Replace.

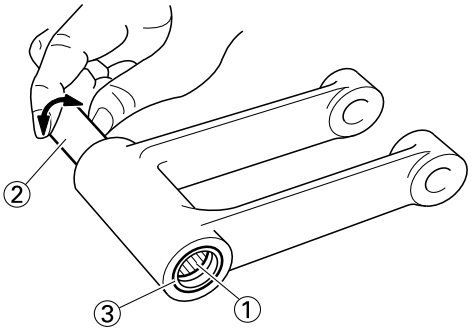

INSTALLING THE BEARING AND OIL SEAL

1. Install:
   - Bearing "1"
   - Oil seal "2"

   To swingarm.

TIP

- Apply the molybdenum disulfide grease on the bearing when installing.
- Install the bearing by pressing it on the side having the manufacture's marks or numbers.
- First install the outer and then the inner bearings to a specified depth from inside.

Installed depth of bearings:
Outer "a": Zero mm (Zero in)
Inner "b": 6.5 mm (0.26 in)

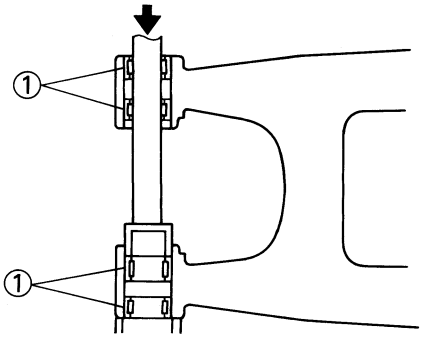

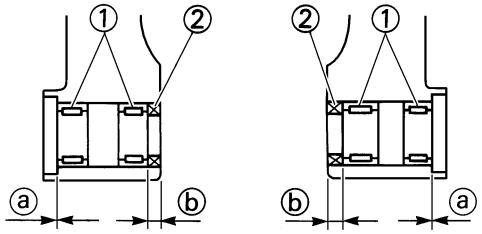

2. Install:
   - Bearing "1"
   - Washer "2"
   - Oil seal "3"

   To relay arm.

TIP

- Apply the molybdenum disulfide grease on the bearing when installing.
- Install the bearing by pressing it on the side having the manufacture's marks or numbers.
- Apply the molybdenum disulfide grease on the washer.

Installed depth of bearings "a":
Zero mm (Zero in)

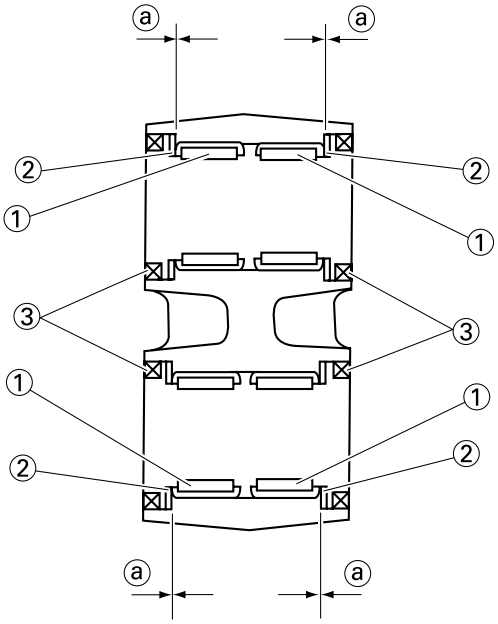

3. Install:
   - Bearing "1"
   - Oil seal "2"

   To connecting rod.

TIP

- Apply the molybdenum disulfide grease on the bearing when installing.
- Install the bearing by pressing it on the side having the manufacture's marks or numbers.

Installed depth of bearings "a":
Zero mm (Zero in)

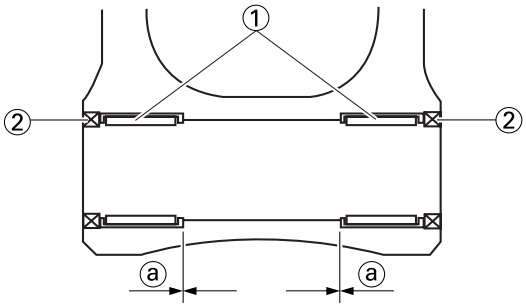

INSTALLING THE SWINGARM

1. Install:
   - Bushing "1"
   - Thrust bearing "2"
   - Oil seal "3"
   - Collar "4"

   To swingarm "5".

TIP

Apply the molybdenum disulfide grease on the bushings, thrust bearings, oil seal lips and contact surfaces of the collar and thrust bearing.

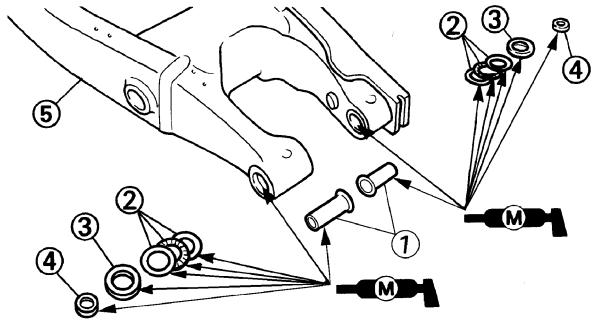

2. Install:
   - Collar "1"
   - Washer "2"

   To relay arm "3".

TIP

Apply the molybdenum disulfide grease on the collars and oil seal lips.

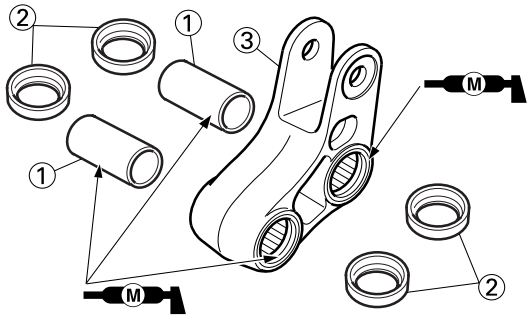

3. Install:
   - Collar "1"

   To connecting rod "2".

TIP

Apply the molybdenum disulfide grease on the collar and oil seal lips.

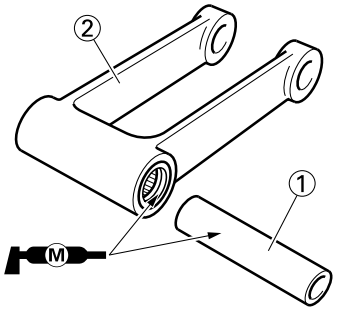

4. Install:
   - Connecting rod "1"
   - Bolt (connecting rod) "2"
   - Washer "3"
   - Nut (connecting rod) "4"

	Nut (connecting rod): 80 Nm (8.0 m•kg, 58 ft•lb)

To relay arm "5".

TIP

Apply the molybdenum disulfide grease on the bolt.

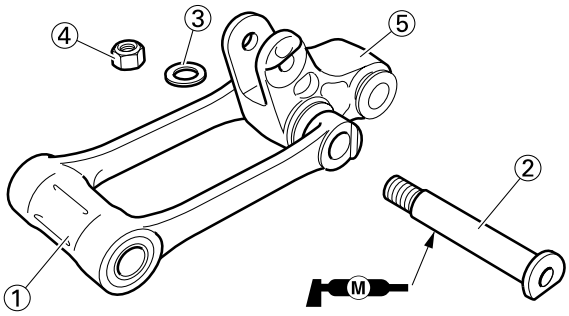

5. Install:
   - Relay arm "1"
   - Bolt (relay arm) "2"
   - Washer "3"
   - Nut (relay arm) "4"

   To swingarm.

TIP

- Apply the molybdenum disulfide grease on the bolt circumference and threaded portion.
- Do not tighten the nut yet.

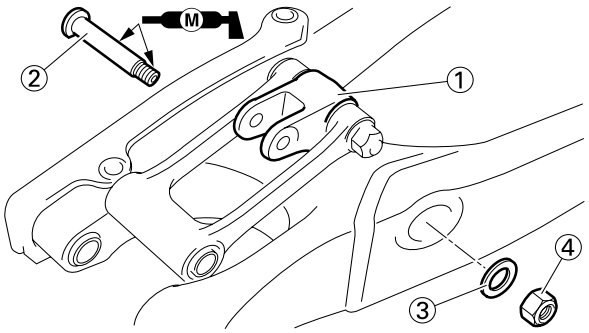

6. Install:
   • Swingarm "1"
   • Pivot shaft "2"

	Pivot shaft: **85 Nm (8.5 m•kg, 61 ft•lb)**

TIP
- Apply the molybdenum disulfide grease on the pivot shaft.
- Insert the pivot shaft from right side.

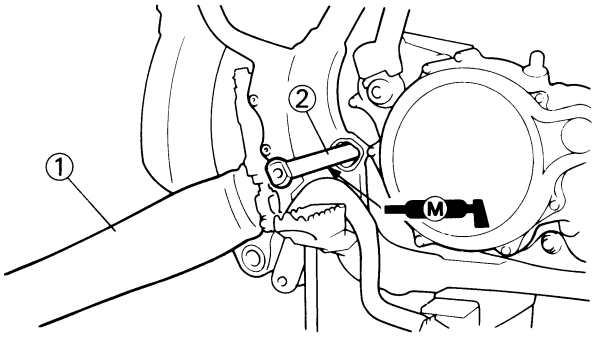

7. Check:
   • Swingarm side play "a"
   Free play exists → Replace thrust bearing.
   • Swingarm up and down movement "b"
   Unsmooth movement/binding/rough spots → Grease or replace bearings, bushings and collars.

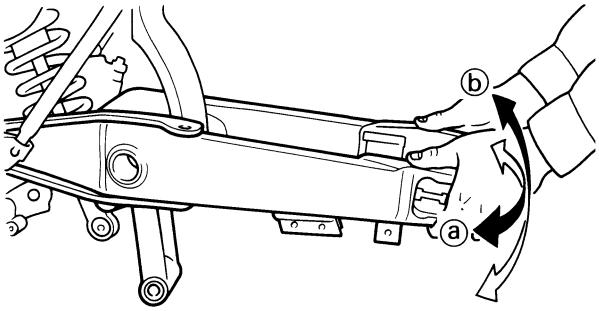

8. Install:
   • Bolt (connecting rod) "1"
   • Washer "2"
   • Nut (connecting rod) "3"

TIP
- Apply the molybdenum disulfide grease on the bolt.
- Do not tighten the nut yet.

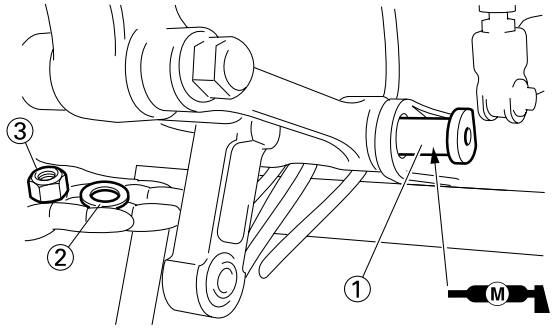

9. Install:
   • Bolt (rear shock absorber-relay arm) "1"
   • Nut (rear shock absorber-relay arm) "2"

	Nut (rear shock absorber-relay arm): **53 Nm (5.3 m•kg, 38 ft•lb)**

TIP
Apply the molybdenum disulfide grease on the bolt.

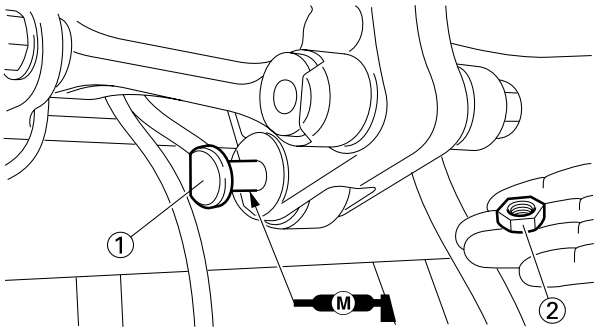

10. Tighten:
   • Nut (connecting rod) "1"

	Nut (connecting rod): **80 Nm (8.0 m•kg, 58 ft•lb)**

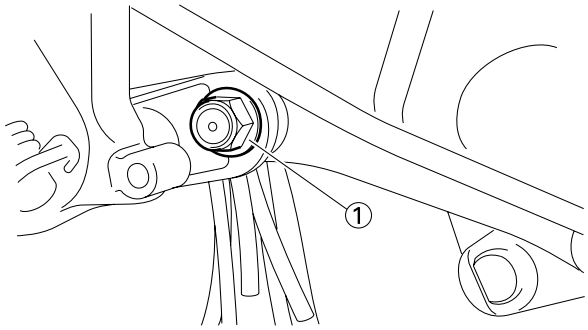

11.Tighten:
- Nut (relay arm) "1"

	Nut (relay arm): **70 Nm (7.0 m•kg, 50 ft•lb)**

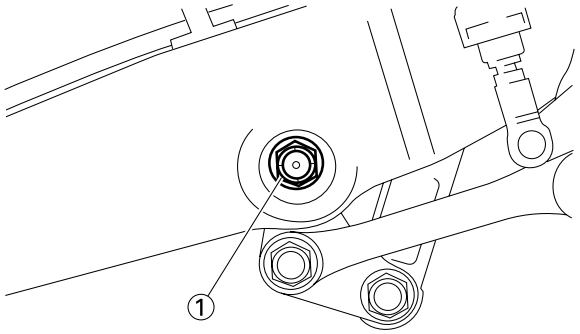

12.Install:
- Cap "1"

TIP
Install the right cap with its mark "a" facing forward.

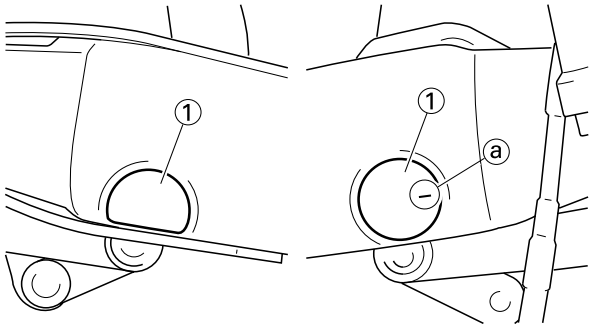

13.Install:
- Bolt (lower chain tensioner) "1"
- Washer "2"
- Collar "3"
- Lower chain tensioner "4"
- Nut (lower chain tensioner) "5"

	Nut (lower chain tensioner): **16 Nm (1.6 m•kg, 11 ft•lb)**

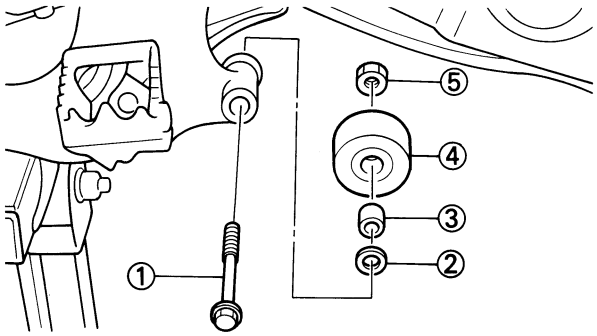

14.Install:
- Drive chain support "1"
- Drive chain support cover "2"
- Bolt {drive chain support [L = 50 mm (1.97 in)]} "3"
- Nut (drive chain support) "4"

	Nut (drive chain support): **7 Nm (0.7 m•kg, 5.1 ft•lb)**

- Bolt {drive chain support cover [L = 10 mm (0.39 in)]} "5"

	Bolt (drive chain support cover): **7 Nm (0.7 m•kg, 5.1 ft•lb)**

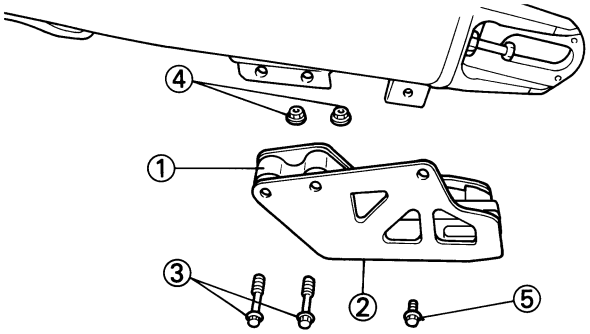

REAR SHOCK ABSORBER

REMOVING THE REAR SHOCK ABSORBER

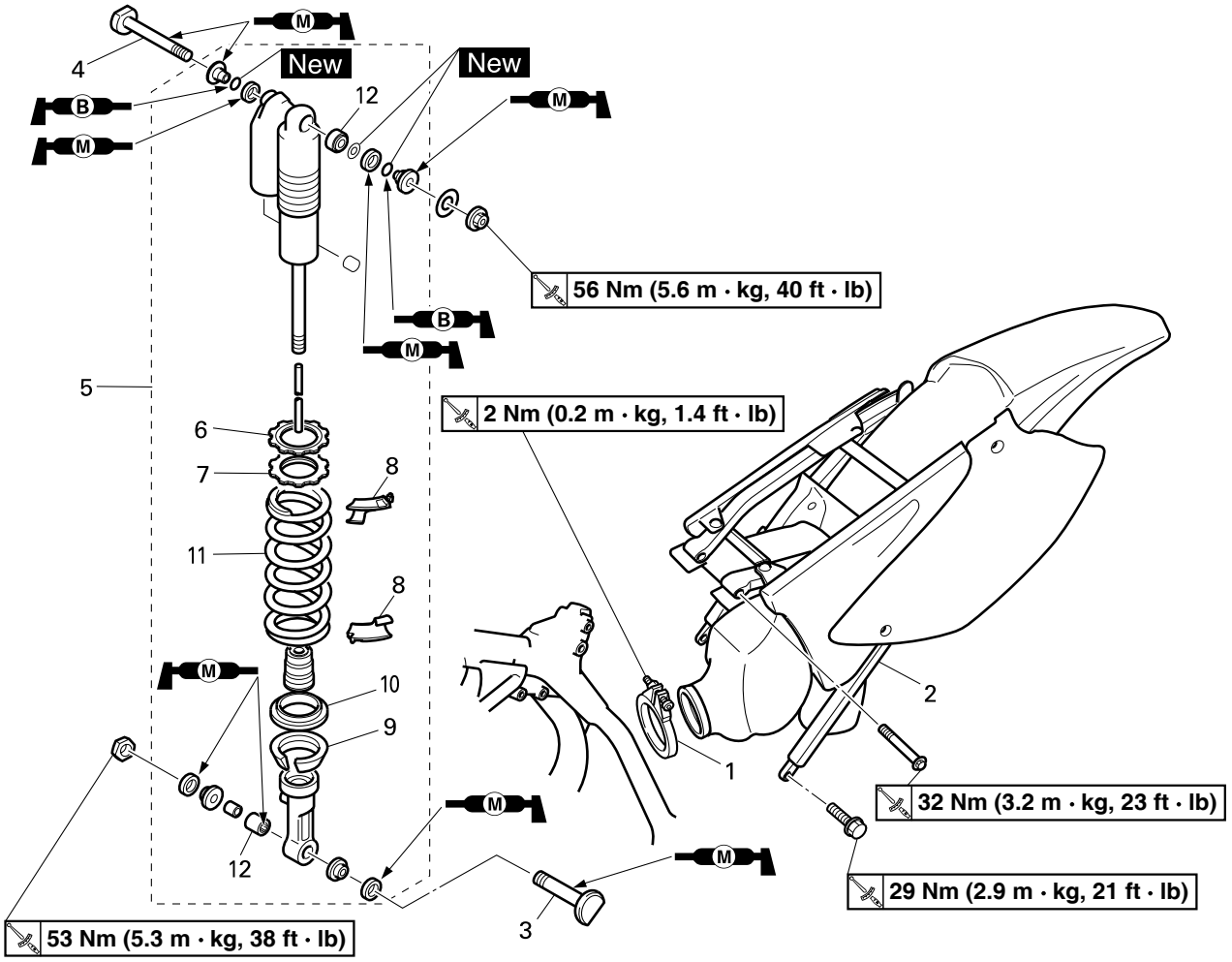

Order	Part name	Q'ty	Remarks
	Hold the machine by placing the suitable stand under the engine.		Refer to "HANDLING NOTE".
	Seat		Refer to "SEAT, FUEL TANK AND SIDE COVERS" section in the CHAPTER 4.
	Silencer		Refer to "EXHAUST PIPE AND SILENCER" section in the CHAPTER 4.
1	Clamp (air filter joint)	1	Only loosening.
2	Rear frame	1	
3	Bolt (rear shock absorber-relay arm)	1	Hold the swingarm.
4	Bolt (rear shock absorber-frame)	1	
5	Rear shock absorber	1	
6	Locknut	1	Only loosening.
7	Adjuster	1	Only loosening.

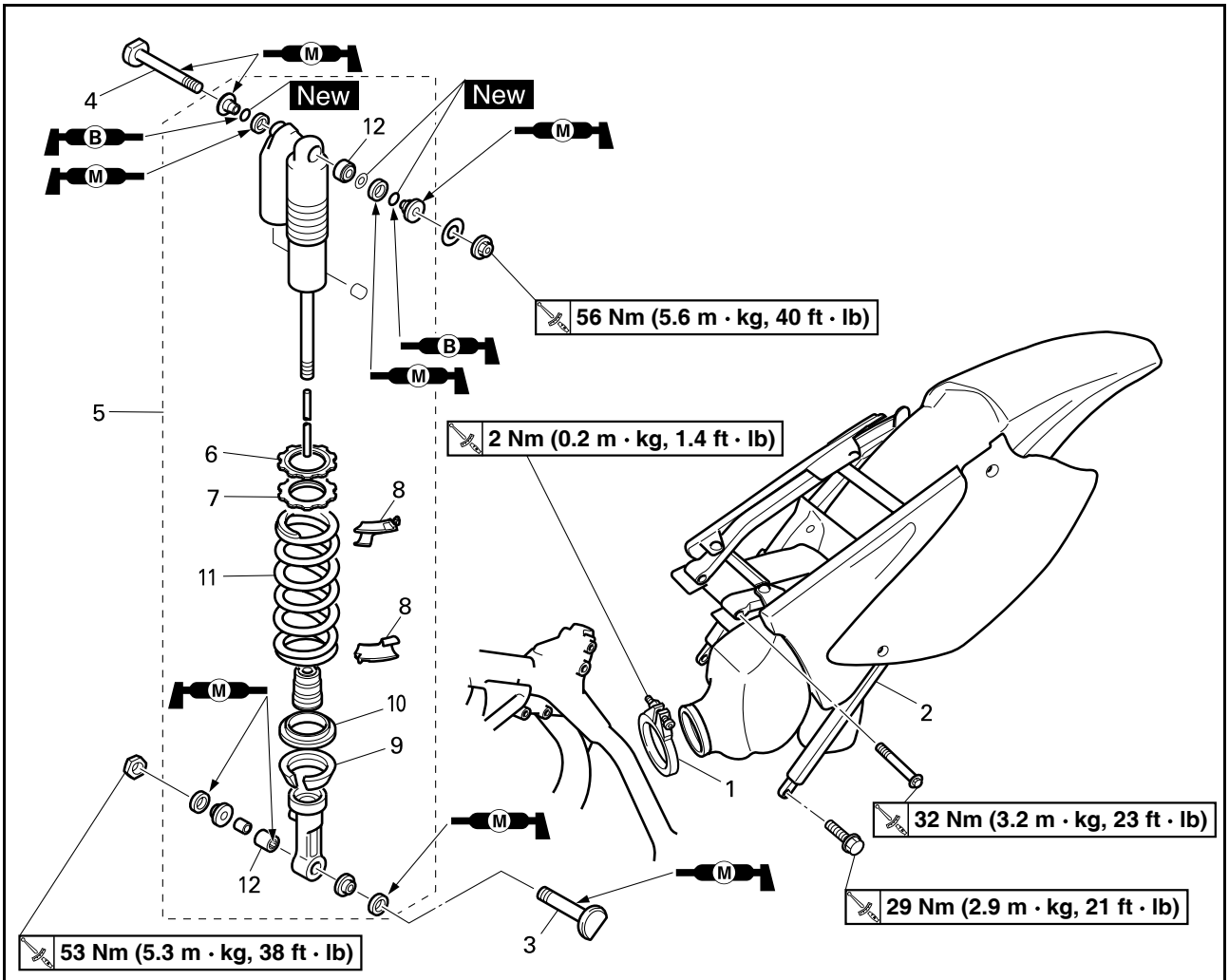

Order	Part name	Q'ty	Remarks
8	Spring seat	2	
9	Lower spring guide	1	
10	Upper spring guide	1	
11	Spring (rear shock absorber)	1	
12	Bearing	2	Refer to removal section.

HANDLING NOTE

⚠ WARNING

- **Support the machine securely so there is no danger of it falling over.**
- **This rear shock absorber is provided with a separate type tank filled with high-pressure nitrogen gas. To prevent the danger of explosion, read and understand the following information before handling the shock absorber. The manufacturer can not be held responsible for property damage or personal injury that may result from improper handling.**
  - **Never tamper or attempt to disassemble the cylinder or the tank.**
  - **Never throw the rear shock absorber into an open flame or other high heat. The rear shock absorber may explode as a result of nitrogen gas expansion and/ or damage to the hose.**
  - **Be careful not to damage any part of the gas tank. A damaged gas tank will impair the damping performance or cause a malfunction.**
  - **Take care not to scratch the contact surface of the piston rod with the cylinder; or oil could leak out.**
  - **Never attempt to remove the plug at the bottom of the nitrogen gas tank. It is very dangerous to remove the plug.**
  - **When scrapping the rear shock absorber, follow the instructions on disposal.**

NOTES ON DISPOSAL (YAMAHA DEALERS ONLY)

Before disposing the rear shock absorber, be sure to extract the nitrogen gas from valve "1". Wear eye protection to prevent eye damage from escaping gas and/or metal chips.

⚠ WARNING

To dispose of a damaged or worn-out rear shock absorber, take the unit to your Yamaha dealer for this disposal procedure.

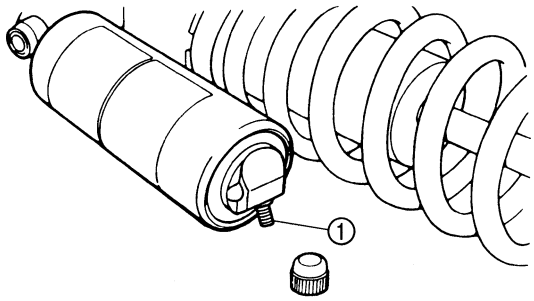

REMOVING THE BEARING

1. Remove:
   - Stopper ring (upper bearing) "1"

TIP

Press in the bearing while pressing its outer race and remove the stopper ring.

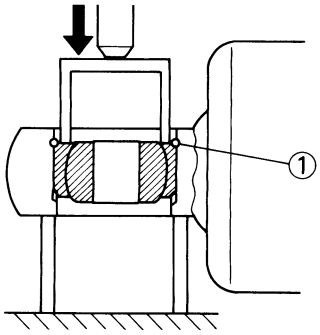

2. Remove:
   - Upper bearing "1"

TIP

Remove the bearing by pressing its outer race.

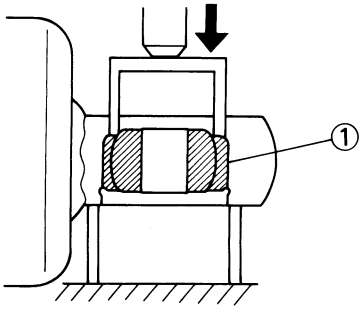

3. Remove:
   • Lower bearing "1"

TIP
Remove the bearing by pressing its outer race.

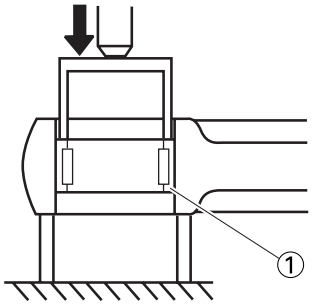

CHECKING THE REAR SHOCK ABSORBER

1. Inspect:
   • Damper rod "1"
   Bends/damage → Replace rear shock absorber assembly.
   • Shock absorber "2"
   Oil leaks → Replace rear shock absorber assembly.
   Gas leaks → Replace rear shock absorber assembly.
   • Spring "3"
   Damage → Replace spring.
   Fatigue → Replace spring.
   Move spring up and down.
   • Spring guide "4"
   Wear/damage → Replace spring guide.
   • Spring seat "5"
   Cracks/damage → Replace.
   • Bearing "6"
   Free play exists/unsmooth revolution/rust → Replace.

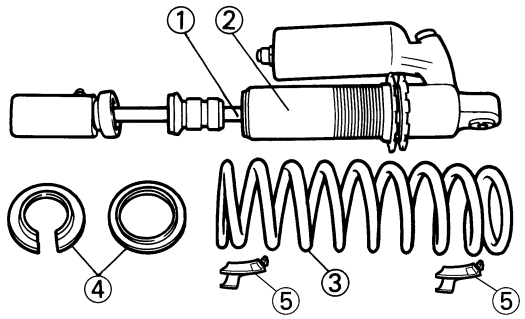

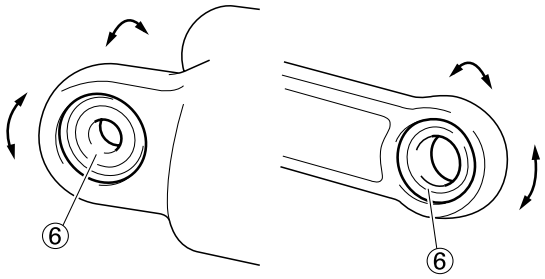

INSTALLING THE BEARING

1. Install:
   • Upper bearing "1"

TIP
Install the bearing parallel until the stopper ring groove appears by pressing its outer race.

NOTICE
Do not apply the grease on the bearing outer race because it will wear the rear shock absorber surface on which the bearing is press fitted.

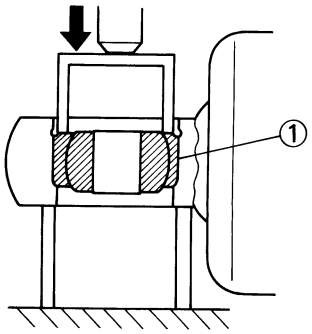

2. Install:
   • Stopper ring (upper bearing) "1" New

TIP
After installing the stopper ring, push back the bearing until it contacts the stopper ring.

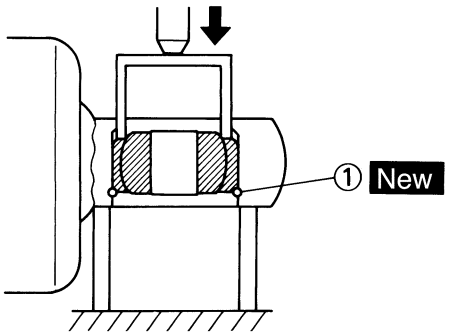

3. Install:
   • Lower bearing "1"

TIP
Install the bearing by pressing it on the side having the manufacture's marks or numbers.

Installed depth of the bearing "a": 4 mm (0.16 in)

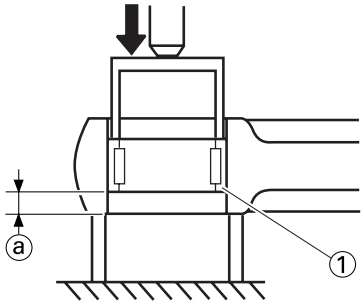

INSTALLING THE SPRING (REAR SHOCK ABSORBER)
1. Install:
   • Spring "1"
   • Upper spring guide "2"
   • Lower spring guide "3"

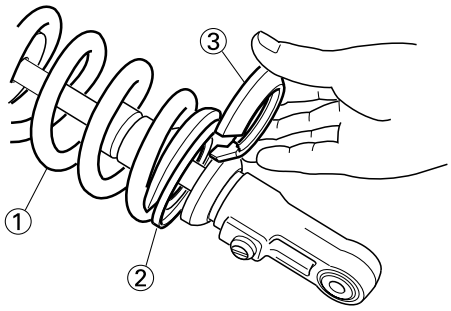

2. Install:
   • Spring seat "1"

TIP
Install the spring seat with the projection "a" brought into contact with the spring end, as shown.

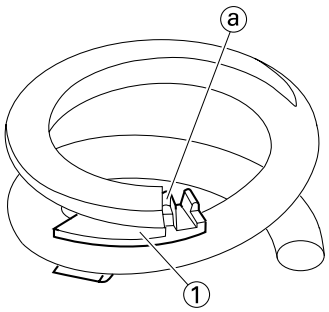

3. Tighten:
   • Adjuster "1"

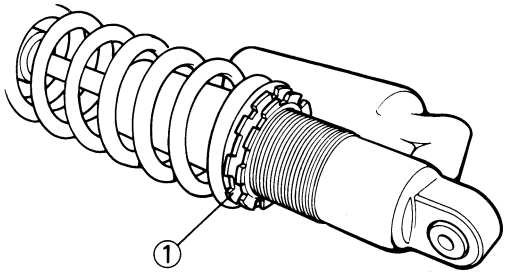

4. Adjust:
   • Spring length (installed)
   Refer to "ADJUSTING THE REAR SHOCK ABSORBER SPRING PRELOAD" section in the CHAPTER 3.
5. Tighten:
   • Locknut "1"

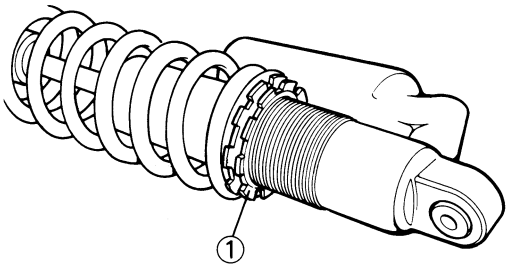

INSTALLING THE REAR SHOCK ABSORBER
1. Install:
   • Dust seal "1"
   • O-ring "2" New
   • Collar "3"

TIP
- Apply the molybdenum disulfide grease on the dust seal lips and collars.
- Apply the lithium soap base grease on the O-rings.

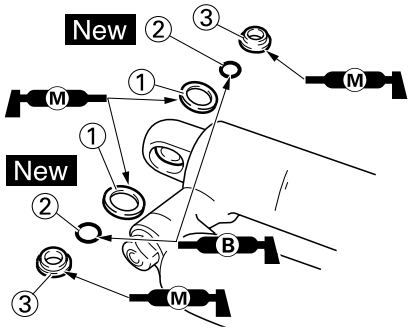

2. Install:
   • Bushing "1"
   • Collar "2"
   • Dust seal "3"

TIP
- Apply the molybdenum disulfide grease on the bearing and dust seal lips.
- Install the dust seals with their lips facing outward.

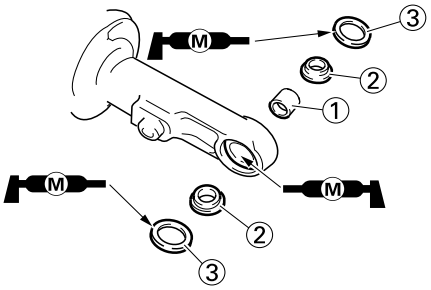

3. Install:
   • Rear shock absorber
4. Install:
   • Bolt (rear shock absorber-frame) "1"
   • Washer "2"
   • Nut (rear shock absorber-frame) "3"

	Nut (rear shock absorber-frame): 56 Nm (5.6 m•kg, 40 ft•lb)

TIP
Apply the molybdenum disulfide grease on the bolt.

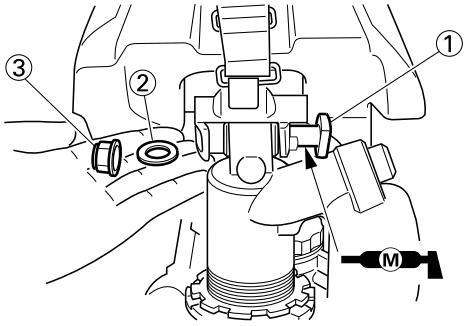

5. Install:
   • Bolt (rear shock absorber-relay arm) "1"
   • Nut (rear shock absorber-relay arm) "2"

	Nut (rear shock absorber-relay arm): 53 Nm (5.3 m•kg, 38 ft•lb)

TIP
Apply the molybdenum disulfide grease on the bolt.

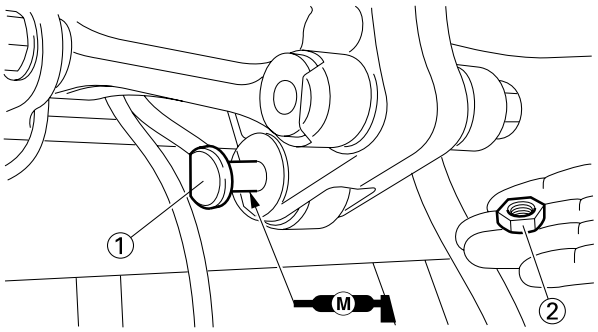

6. Install:
   • Rear frame "1"
   • Bolt [rear frame (upper)] "2"

	Bolt [rear frame (upper)]: 32 Nm (3.2 m•kg, 23 ft•lb)

   • Bolt [rear frame (lower)] "3"

	Bolt [rear frame (lower)]: 29 Nm (2.9 m•kg, 21 ft•lb)

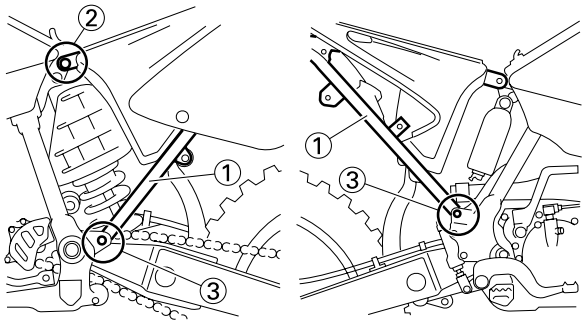

7. Tighten:
   • Bolt (air filter joint) "1"

	Bolt (air filter joint): 2 Nm (0.2 m•kg, 1.4 ft•lb)

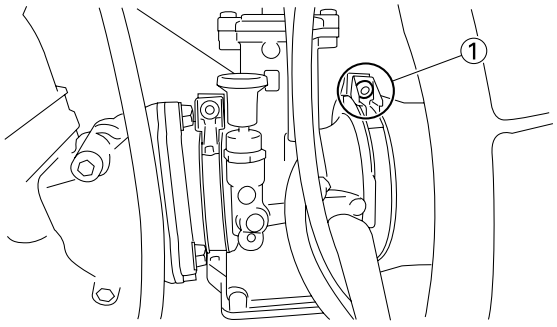

ELECTRICAL

TIP

This section is intended for those who have basic knowledge and skill concerning the servicing of Yamaha motorcycles (e.g., Yamaha dealers, service engineers, etc.) Those who have little knowledge and skill concerning servicing are requested not to undertake inspection, adjustment, disassembly, or reassembly only by reference to this manual. It may lead to servicing trouble and mechanical damage.

ELECTRICAL COMPONENTS AND WIRING DIAGRAM

ELECTRICAL COMPONENTS

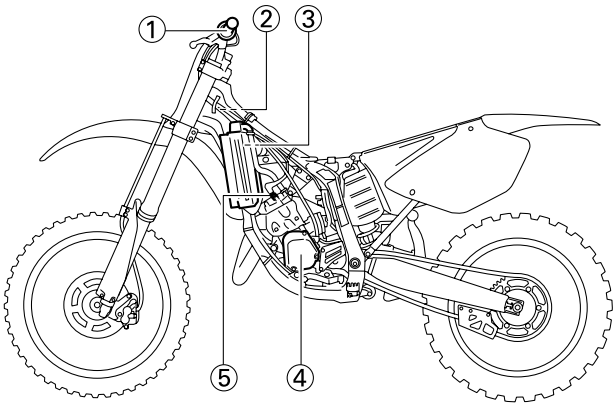

1. Engine stop switch
2. CDI unit
3. Ignition coil
4. CDI magneto
5. Spark plug

WIRING DIAGRAM

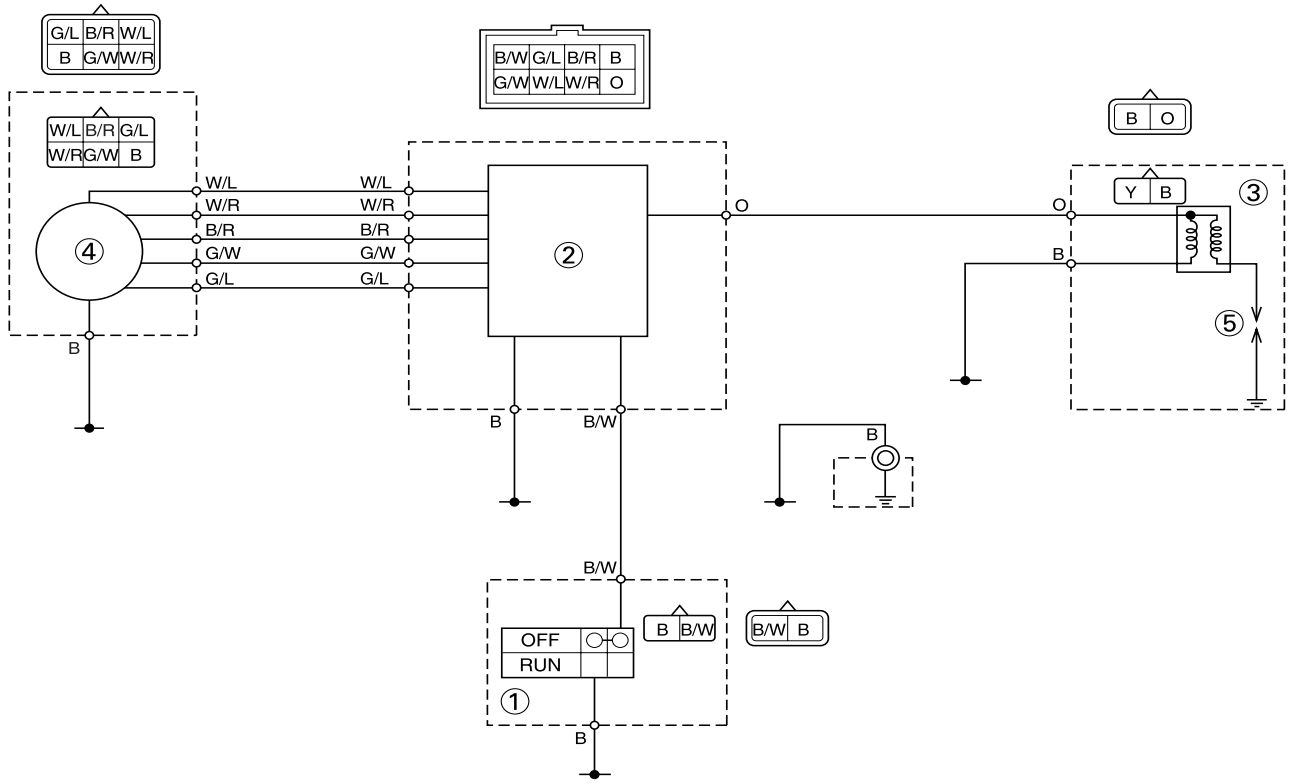

1. Engine stop switch
2. CDI unit
3. Ignition coil
4. CDI magneto
5. Spark plug

COLOR CODE

B	Black
O	Orange
Y	Yellow
B/R	Black/Red
B/W	Black/White
G/L	Green/Blue
G/W	Green/White
W/L	White/Blue
W/R	White/Red

IGNITION SYSTEM

INSPECTION STEPS

Use the following steps for checking the possibility of the malfunctioning engine being attributable to ignition system failure and for checking the spark plug which will not spark.

Spark gap test	Spark →	*Clean or replace spark plug.
No spark ↓		
Check entire ignition system for connection.	No good →	Repair or replace.
OK ↓		
Check engine stop switch.	No good →	Replace.
OK ↓		
Check ignition coil. (primary coil and secondary coil)	No good →	Replace.
OK ↓		
Check spark plug cap.	No good →	Replace.
OK ↓		
Check CDI magneto. (pickup coil and charging coil)	No good →	Replace.
OK ↓		
Replace CDI unit.		

***marked: Only when the ignition checker is used.**

TIP

- Remove the following parts before inspection.

1. Seat
2. Fuel tank

- Use the following special tools in this inspection.



Dynamic spark tester:
YM-34487
Ignition checker:
90890-06754
Pocket tester:
YU-3112-C/90890-03112

SPARK GAP TEST

1. Disconnect the spark plug cap from spark plug.
2. Connect the dynamic spark tester "1" (ignition checker "2") as shown.
   - Ignition coil "3"
   - Spark plug "4"

A

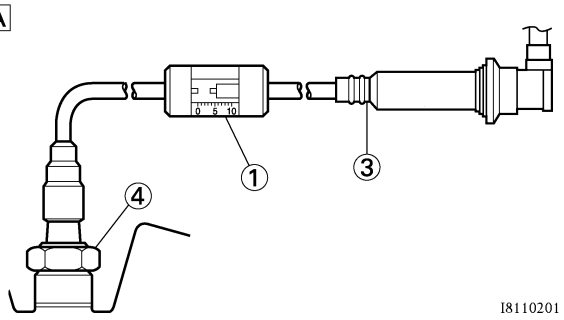

B

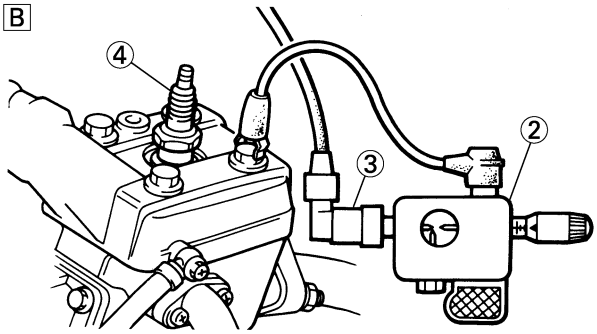

A. For USA and CDN
B. Except for USA and CDN

3. Kick the kickstarter crank.
4. Check the ignition spark gap.
5. Start engine, and increase spark gap until misfire occurs. (for USA and CDN only)

	Minimum spark gap: 6.0 mm (0.24 in)

CHECKING THE COUPLERS AND LEADS CONNECTION

1. Check:
   - Couplers and leads connection
     Rust/dust/looseness/short-circuit → Repair or replace.

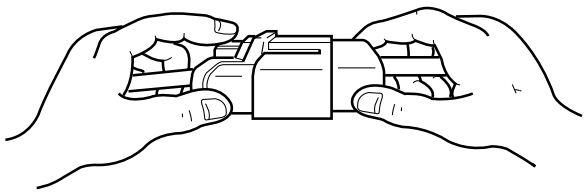

CHECKING THE ENGINE STOP SWITCH

1. Inspect:
   - Engine stop switch conduction

Tester (+) lead → Black/White lead "1" **Tester (-) lead → Black lead "2"**

	Result **Conductive (while the engine stop switch is pushed)**

Not conductive while it is pushed → Replace.
Conductive while it is freed → Replace.

TIP
Set the tester selection position to "Ω × 1".

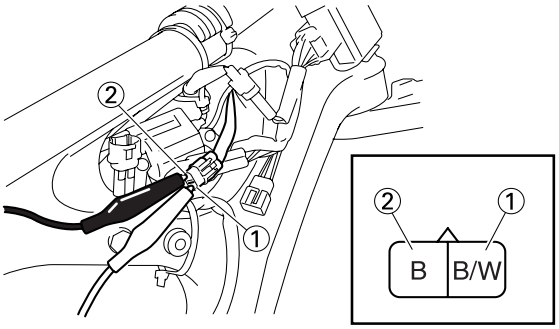

CHECKING THE IGNITION COIL

1. Inspect:
   - Primary coil resistance
     Out of specification → Replace.

Tester (+) lead → Yellow lead "1" **Tester (-) lead → Black lead "2"**

	Primary coil resistance	Tester selector position
	0.24–0.36 Ω at 20 °C (68 °F)	**Ω × 1**

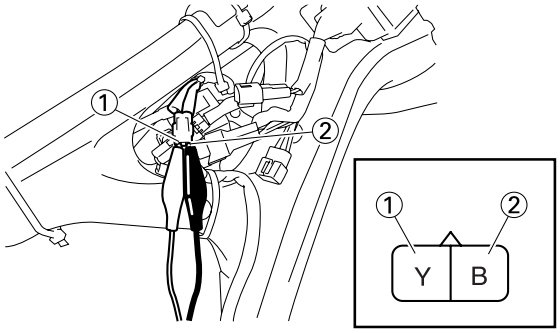

2. Inspect:
   • Secondary coil resistance
   Out of specification → Replace.

Tester (+) lead → Spark plug lead "1"
Tester (-) lead → Yellow lead "2"

	Secondary coil resistance	Tester selector position
	5.7–8.5 kΩ at 20 °C (68 °F)	kΩ × 1

TIP
- Remove the spark plug cap by turning it counterclockwise and inspect.
- Install the spark plug cap by turning it clockwise until it is tight.

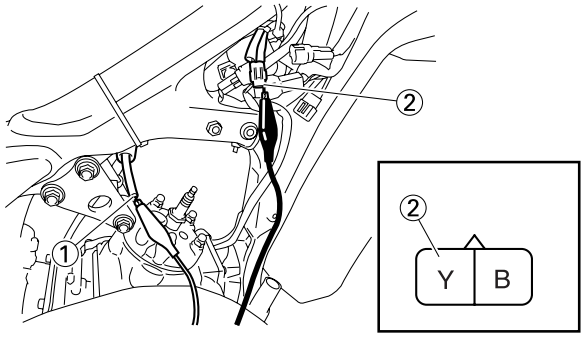

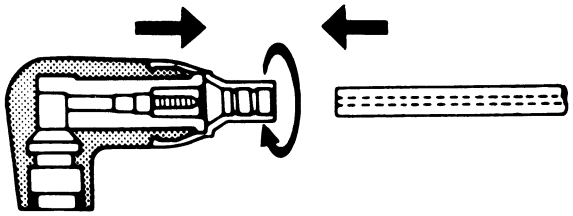

CHECKING THE SPARK PLUG CAP

1. Inspect:
   • Spark plug cap
   Loose connection → Tighten.
   Deteriorated/damaged → Replace.
   • Spark plug cap resistance
   Out of specification → Replace.

Tester (+) lead → Spark plug lead terminal "1"
Tester (-) lead → Spark plug terminal "2"

	Spark plug cap resistance	Tester selector position
	4–6 kΩ at 20 °C (68 °F)	kΩ × 1

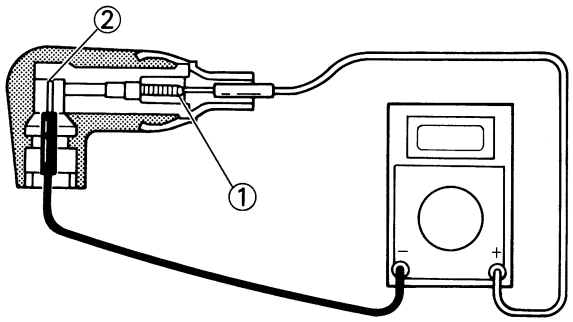

CHECKING THE CDI MAGNETO

1. Inspect:
   • Pickup coil resistance
   Out of specification → Replace.

Tester (+) lead → White/Red lead "1"
Tester (-) lead → White/Blue lead "2"

	Pickup coil resistance	Tester selector position
	248–372 Ω at 20 °C (68 °F)	Ω × 100

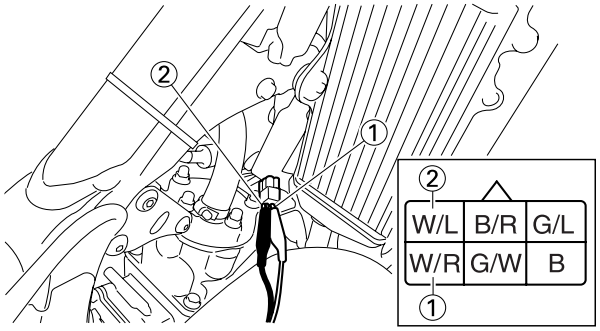

2. Inspect:
   • Charging coil 1 resistance
   Out of specification → Replace.

Tester (+) lead → Black/Red lead "1"
Tester (-) lead → Green/White lead "2"

	Charging coil 1 resistance	Tester selector position
	720–1,080 Ω at 20 °C (68 °F)	Ω × 100

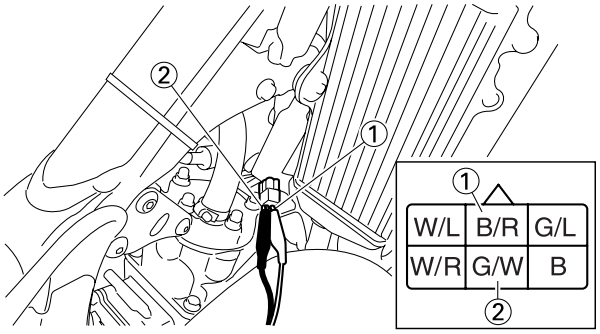

3. Inspect:
   • Charging coil 2 resistance
   Out of specification → Replace.

Tester (+) lead → Green/Blue lead "1"
Tester (-) lead → Black lead "2"

	Charging coil 2 resistance	Tester selector position
	44–66 Ω at 20 °C (68 °F)	**Ω × 10**

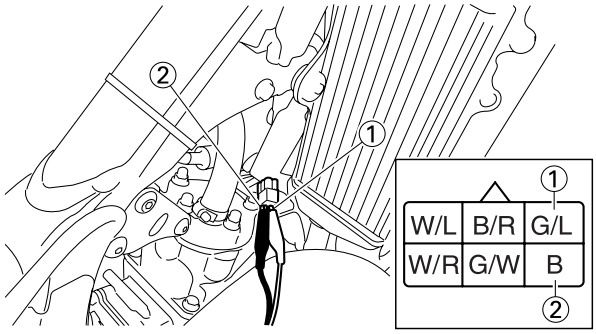

CHECKING THE CDI UNIT
Check all electrical components. If no fault is found, replace the CDI unit. Then check the electrical components again.

TUNING
ENGINE
CARBURETOR SETTING
- The role of fuel is to cool the engine, and in the case of a 2-stroke engine, to lubricate the engine in addition to power generation. Accordingly, if a mixture of air and fuel is too lean, abnormal combustion will occur, and engine seizure may result. If the mixture is too rich, spark plugs will get wet with oil, thus making it impossible to bring the engine into full play or if the worst comes to the worst, the engine may stall.
- The richness of the air-fuel mixture required for the engine will vary with atmospheric conditions of the day and therefore, the settings of the carburetor must be properly suited to the atmospheric conditions (air pressure, humidity and temperature).
- Finally, the rider himself must make a test-run and check his machine for conditions (pick-up of engine speed, road surface conditions) and for the discoloration of the spark plug(s). After taking these into consideration, he must select the best possible carburetor settings.

TIP
It is advisable to make a note of settings, atmospheric conditions, road surface condition, laptime, etc. so that the memorandum can be used as a reference useful for future.

ATMOSPHERIC CONDITIONS AND CARBURETOR SETTINGS

Air temp.	Humidity	Air pressure (altitude)	Mixture	Setting
High	High	Low (high)	Richer	Leaner
Low	Low	High (low)	Leaner	Richer

TIP
The reason for the above tendency is that the richness or leanness of a fuel mixture depends on the density of the air (i.e. the concentration of oxygen in it).
- Higher temperature expands the air with its resultant reduced density.
- Higher humidity reduces the amount of oxygen in the air by so much of the water vapor in the same air.
- Lower atmospheric pressure (at a high altitude) reduces the density of the air.

TEST RUN
After warming up the engine equipped with the standard type carburetor(s) and spark plug(s), run two or three laps of the circuit and check the smooth operation of the engine and discoloration of spark plug(s).

Discoloration	Condition of spark plug
Normal	Insulator is dry and burnt brown.
Over burned (too lean)	Insulator is whitish.
Oil fouled (too rich)	Insulator is sooty and wet.

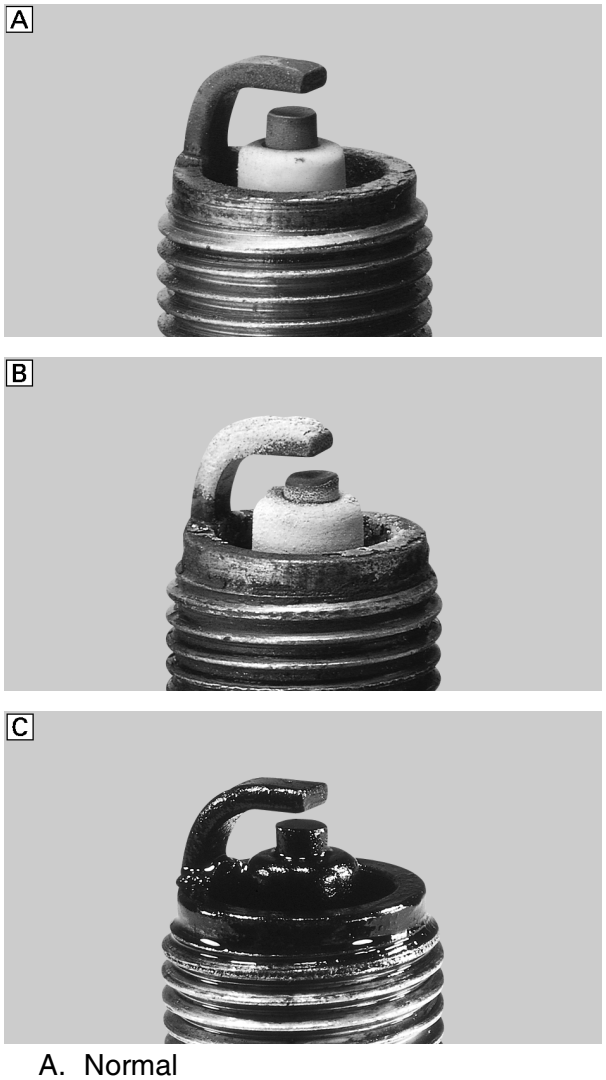

A. Normal
B. Over burned (too lean)
C. Oil fouled (too rich)

EFFECT OF SETTING PARTS IN RELATION TO THROTTLE VALVE OPENING

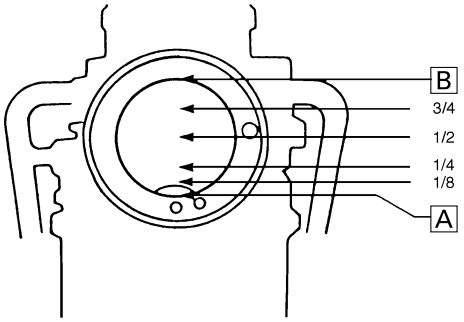

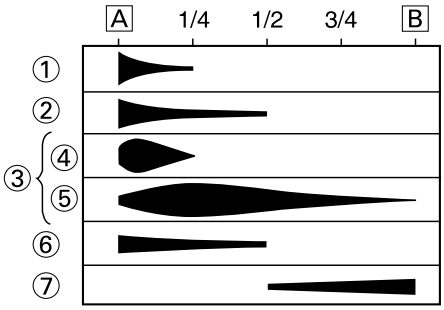

A. Closed
B. Full-open
1. Pilot air screw
2. Pilot jet
3. Jet needle
4. Diameter of straight portion
5. Clip position
6. Throttle valve
7. Main jet

ADJUSTING THE MAIN JET

The richness of air-fuel mixture with 1/2–4/4 throttle can be set by changing the main jet "1".

Standard main jet	**#410** ***#430**

*Except for USA and CDN

1. Spark plug is too hot.
   • Select a main jet having higher calibrating No. than standard. (To be enriched)
2. Spark plug is wet.
   • Select a main jet having lower calibrating No. than standard. (To be leaned out)

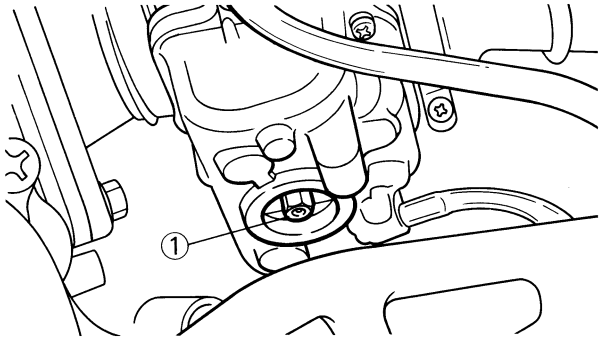

ADJUSTING THE PILOT AIR SCREW

The richness of the air-fuel mixture with full closed to 1/4 throttle can be set by turning the pilot air screw "1". Turning in the pilot air screw will enrich the mixture at low speeds, and turning out it will lean out the mixture.

Standard pilot air screw position	**2-1/4 turns out**

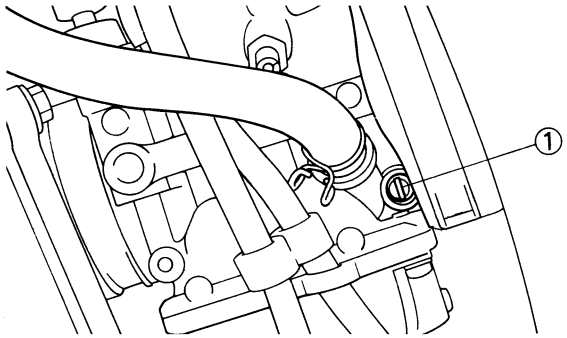

ADJUSTING THE PILOT JET

The richness of air-fuel mixture with the throttle fully closed to 1/2 open can be set by changing the pilot jet "1". It is changed when adjustment cannot be made by the pilot air screw alone.

Standard pilot jet	**#40** ***#45**

*Except for USA and CDN

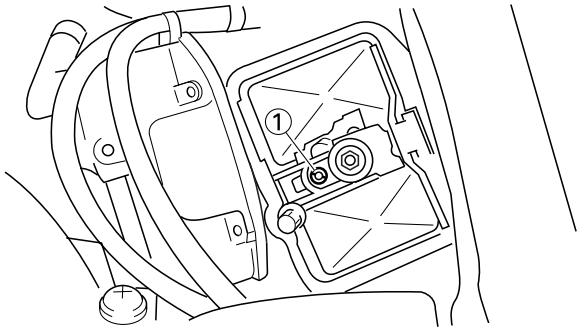

ADJUSTING THE JET NEEDLE GROOVE POSITION

Should the engine be hard to run smoothly at intermediate speeds, the jet needle "1" must be adjusted. If the mixture is too rich or too lean at intermediate speed operation, irregular engine operation and poor acceleration will result. Whether or not the richness of the mixture is proper is hard to be determined by means of the spark plug and therefore, it should be judged from your feeling of actual engine operation.

1. Too rich at intermediate speeds
   - Rough engine operation is felt and the engine will not pick up speed smoothly.
     In this case, step up the jet needle clip by one groove or 0.5 groove and move down the needle to lean out the mixture.
2. Too lean at intermediate speeds
   - The engine breathes hard and will not pick up speed quickly.
     In this case, step down the jet needle clip by one groove or 0.5 groove and move up the needle to enrich the mixture.

Standard clip position	No.3 groove

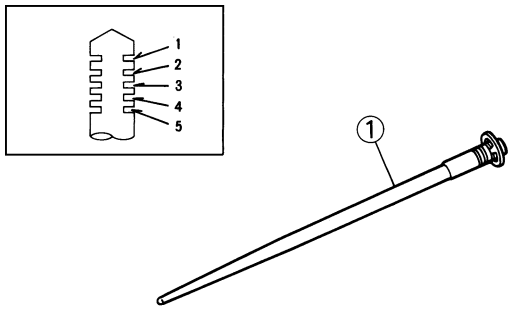

ADJUSTING THE JET NEEDLE (For USA and CDN)

On the carburetors used in the YZ125, the main nozzle is a non disassembly type, so it can not be replaced. Therefore, carburetor setting requires the change of the jet needle.

1. The jet needle setting parts, having the same taper angle, are available in different straight portion diameters and in different taper starting positions.

Standard jet needle	6BFY42-74

In the case of the same number of clip position, changing from 6BFY42-74 to 6BFY43-74 has the same effect as a rising of 0.5-clip position. And in the case of the same number of clip position, changing from 6BFY42-74 to 6BFY44-74 has the same effect as a rising of 1-clip position.

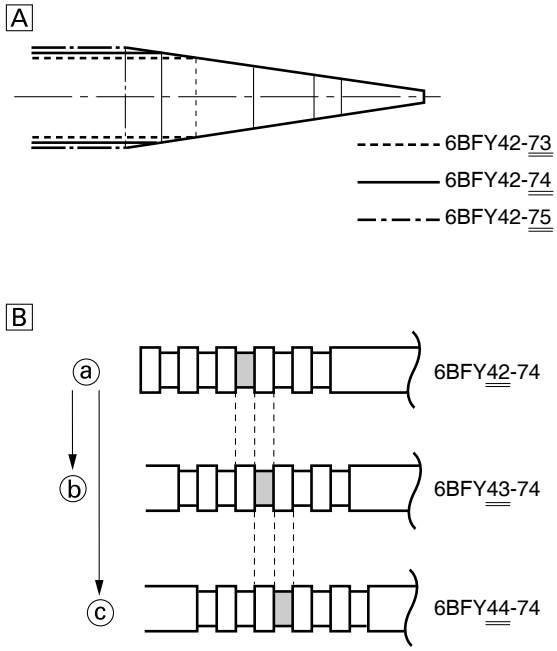

A. Difference in straight portion dia.
B. Difference in clip position
a. Reference needle
b. 0.5 richer
c. 1 richer

ADJUSTING THE JET NEEDLE (For EUROPE, AUS, NZ and ZA)

On the carburetors used in the YZ125, the main nozzle is a non disassembly type, so it can not be replaced. Therefore, carburetor setting requires the change of the jet needle.

1. The jet needle setting parts, having the same taper angle, are available in different straight portion diameters and in different taper starting positions.

Standard jet needle	6BFY43-74

In the case of the same number of clip position, changing from 6BFY43-74 to 6BFY42-74 has the same effect as a lowering of 0.5-clip position. And in the case of the same number of clip position, changing from 6BFY43-74 to 6BFY44-74 has the same effect as a rising of 0.5-clip position.

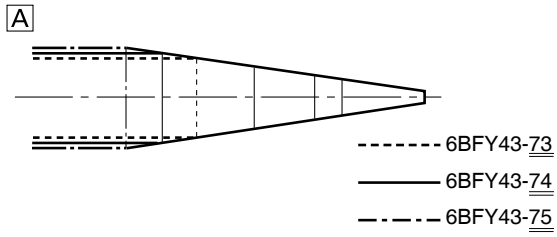

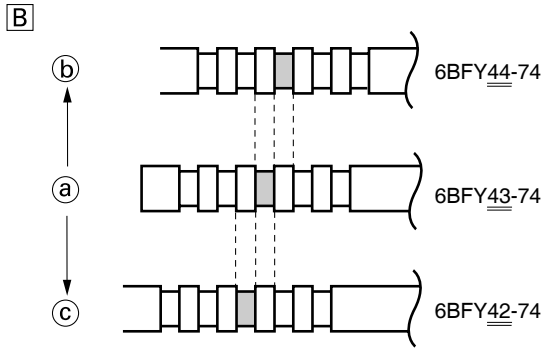

A. Difference in straight portion dia.
B. Difference in clip position
a. Reference needle
b. 0.5 richer
c. 0.5 leaner

RELATIONSHIP WITH THROTTLE OPENING

The flow of the fuel through the carburetor main system is controlled by the main jet and then, it is further regulated by the area between the main nozzle and the jet needle. On the relationship between the fuel flow and the throttle opening, the fuel flow relates to the straight portion of the jet needle at full closed–1/8 throttle, to the 1st tapered portion at 1/4 throttle, to the second tapered portion at 1/2 throttle, to the third tapered portion at 3/4 throttle and to the fourth tapered portion at full open.
Therefore, the fuel flow is balanced at each stage of throttle opening by a combination of the jet needle diameter and clip position.

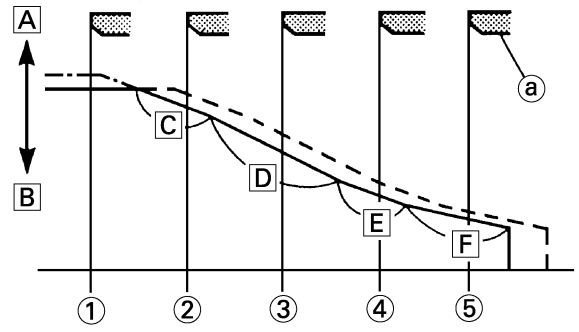

<Example>
(For USA and CDN)

——— 6BFY42-74-3
--------- 6BFY42-74-2
—·—·—·— 6BFY42-75-3

(For EUROPE, AUS, NZ and ZA)

——— 6BFY43-74-3
--------- 6BFY43-74-2
—·—·—·— 6BFY43-75-3

A. Lean (larger diameter)
B. Rich (smaller diameter)
C. 1st taper
D. 2nd taper
E. 3rd taper
F. 4th taper
1. Full closed
2. 1/4 throttle
3. 1/2 throttle
4. 3/4 throttle
5. Full open
a. Main nozzle

CARBURETOR SETTING PARTS

Part name		Size	Part number
Main jet "1"	Rich	#470	137-14143-94
		#460	137-14143-92
		#450	137-14143-90
		#440	137-14143-88
**(STD)		#430	137-14143-86
		#420	137-14143-84
*(STD)		#410	137-14143-82
	Lean	#400	137-14143-80
Pilot jet "2"	Rich	#50	4KM-14142-50
		#47.5	4KM-14142-47
**(STD)		#45	4KM-14142-45
		#42.5	4KM-14142-42
*(STD)		#40	4KM-14142-40
		#37.5	4KM-14142-37
		#35	4KM-14142-35
		#32.5	4KM-14142-32
	Lean	#30	4KM-14142-30
Throttle valve "3"	Rich		
(STD)		4.0	1C3-14112-40
		4.25	1C3-14112-42
	Lean		
Jet needle "4"	Rich	6BFY44-72	284-14116-K2
		6BFY44-73	284-14116-K3
		6BFY44-74	284-14116-K4
		6BFY44-75	284-14116-K5
	Lean	6BFY44-76	284-14116-K6

Part name		Size	Part number
	Rich	6BFY43-72	284-14116-J2
		6BFY43-73	284-14116-J3
**(STD)		6BFY43-74	284-14116-J4
		6BFY43-75	284-14116-J5
	Lean	6BFY43-76	284-14116-J6
	Rich	6BFY42-72	284-14116-H2
		6BFY42-73	284-14116-H3
*(STD)		6BFY42-74	284-14116-H4
		6BFY42-75	284-14116-H5
	Lean	6BFY42-76	284-14116-H6

* For USA and CDN
** Except for USA and CDN

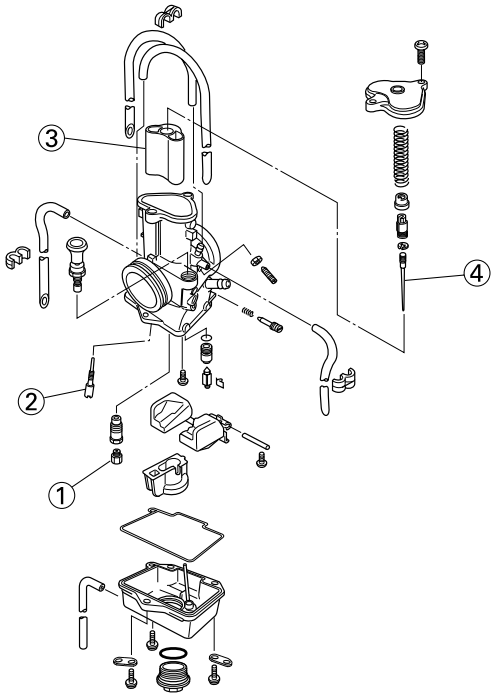

ROAD CONDITION AND EXAMPLES OF CARBURETOR SETTING

		General condition			Sandy condition		
		Under 10°C (50°F) (Winter)	15–25°C (59–77°F) (Spring, Autumn)	Over 30°C (86°F) (Summer)	Under 10°C (50°F) (Winter)	15–25°C (59–77°F) (Spring, Autumn)	Over 30°C (86°F (Summer)
Main jet	A	#420	#410	#410	#440	#430	#430
	B	#440	#430	#420	#460	#450	#440
Jet needle	A	6BFY43-74-3	6BFY42-74-3	6BFY42-74-3	6BFY43-74-4	6BFY42-74-4	6BFY43-74-3
	B	6BFY44-74-3	6BFY43-74-3	6BFY44-74-2	6BFY43-74-4	6BFY44-74-3	6BFY43-74-3
Pilot jet	A	#42.5	#40	#40	#42.5	#40	#40
	B	#47.5	#45	#42.5	#47.5	#45	#42.5
Pilot air screw		2-1/4	2-1/4	2-1/4	2-1/4	2-1/4	2-1/4

A. For USA and CDN
B. Except for USA and CDN

SPECIFICATIONS OF JET NEEDLE (For USA and CDN)

		Diameter of straight portion				
		ø2.72 mm (0.1071 in)	ø2.73 mm (0.1075 in)	ø2.74 mm (0.1079 in)	ø2.75 mm (0.1083 in)	ø2.76 mm (0.1087 in)
Rich	1 richer	6BFY44-72-3	6BFY44-73-3	6BFY44-74-3	6BFY44-75-3	6BFY44-76-3
		6BFY42-72-4	6BFY42-73-4	6BFY42-74-4	6BFY42-75-4	6BFY42-76-4
	0.5 richer	6BFY43-72-3	6BFY43-73-3	6BFY43-74-3	6BFY43-75-3	6BFY43-76-3
	STD	6BFY42-72-3	6BFY42-73-3	6BFY42-74-3	6BFY42-75-3	6BFY42-76-3
	0.5 leaner	6BFY43-72-2	6BFY43-73-2	6BFY43-74-2	6BFY43-75-2	6BFY43-76-2
	1 leaner	6BFY44-72-1	6BFY44-73-1	6BFY44-74-1	6BFY44-75-1	6BFY44-76-1
Lean		6BFY42-72-2	6BFY42-73-2	6BFY42-74-2	6BFY42-75-2	6BFY42-76-2

SPECIFICATIONS OF JET NEEDLE (For EUROPE, AUS, NZ and ZA)

		Diameter of straight portion				
		ø2.72 mm (0.1071 in)	ø2.73 mm (0.1075 in)	ø2.74 mm (0.1079 in)	ø2.75 mm (0.1083 in)	ø2.76 mm (0.1087 in)
Rich	1 richer	6BFY43-72-4	6BFY43-73-4	6BFY43-74-4	6BFY43-75-4	6BFY43-76-4
	0.5 richer	6BFY44-72-3	6BFY44-73-3	6BFY44-74-3	6BFY44-75-3	6BFY44-76-3
		6BFY42-72-4	6BFY42-73-4	6BFY42-74-4	6BFY42-75-4	6BFY42-76-4
	STD	6BFY43-72-3	6BFY43-73-3	6BFY43-74-3	6BFY43-75-3	6BFY43-76-3
	0.5 leaner	6BFY44-72-2	6BFY44-73-2	6BFY44-74-2	6BFY44-75-2	6BFY44-76-2
		6BFY42-72-3	6BFY42-73-3	6BFY42-74-3	6BFY42-75-3	6BFY42-76-3
Lean	1 leaner	6BFY43-72-2	6BFY43-73-2	6BFY43-74-2	6BFY43-75-2	6BFY43-76-2

EXAMPLES OF CARBURETOR SETTING DEPENDING ON SYMPTOM

Symptom	Setting	Checking
At full throttle Stall at high speeds *Hard breathing Shearing noise Whitish spark plug ↓ Lean mixture	Increase main jet calibration no. (Gradually)	Discoloration of spark plug → If tan color, it is in good condition. If cannot be corrected: Clogged float valve seat Clogged fuel hose Clogged fuel cock
At full throttle Stop of speed pick-up Slow speed pick-up Slow response Sooty spark plug ↓ Rich mixture	Decrease main jet calibration no. (Gradually) *In case of racing slight enrichment of mixture reduces engine trouble.	Discoloration of spark plug → If tan color, it is in good condition. If not effect: Clogged air filter Fuel overflow from carburetor Clogged main air passage or clogged filter
Lean mixture	Lower jet needle clip position. (1 groove down)	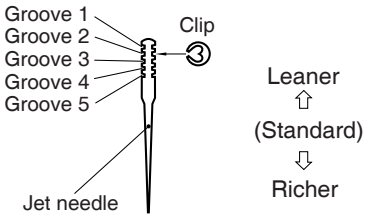 Clip position indicates the position of jet needle groove, to which the clip is fitted. The position is numbered from the top. If a change in the clip position (1 groove) is effective, try another jet needle that provides a difference of 0.5 in the clip position.
Rich mixture	Raise jet needle clip position. (1 groove up)	
1/4–3/4 throttle *Hard breathing Lack of speed	Lower jet needle clip position. (1 groove down)	
1/4–1/2 throttle Slow speed pick-up White smoke Poor acceleration	Raise jet needle clip position. (1 groove up)	
0–1/4 throttle *Hard breathing Speed down	Use jet needle having a smaller diameter.	Number of turns-back → Correct properly Overflow from carburetor
0–1/4 throttle Poor acceleration White smoke	Use jet needle with a larger diameter.	
Unstable at low speeds Pinking noise	Lower jet needle clip position. (1 groove down) Turn in pilot air screw.	
Poor response at extremely low speed	Reduce pilot jet calibration No. Turn out pilot air screw. If not effect, reverse the above procedures.	Dragging brake Overflow from carburetor
Poor response in the range of low to intermediate speeds	Raise jet needle clip position. If no effect, reverse the above procedures.	

Symptom	Setting	Checking
Poor response when throttle is opened quickly	Check overall settings. Use main jet having lower calibration no. Raise jet needle clip position. (1 groove up) If no effect, reverse the above procedures.	Check air filter for fouling.
Poor engine operation	Turn in pilot air screw.	Check throttle valve operation.

* In case of hard breathing, check the air vent hose for clogging.

TIP

This should be taken simply for an example. It is necessary to set the carburetor while checking the operating conditions of the engine and discoloration of spark plugs. Normally, carburetor setting is made by means of the main jet, jet needle clip position (including one with 0.5 difference), pilot jet and pilot air screw. If the result of setting is still unsatisfactory, it is advisable to change the diameter of the straight portion the jet needle.

CHANGE OF THE HEAT RANGE OF SPARK PLUGS

Judging from the discoloration of spark plugs, if they are found improper, it can be corrected by the following two methods; changing carburetor settings and changing the heat range of spark plug.

Standard spark plug	**BR9EVX/NGK (resistance type)**

TIP

- In principle, it is advisable to first use spark plugs of standard heat range, and judging from the discoloration of spark plugs, adjust carburetor settings.
- If the calibration No. of the main jet must be changed by ±30, it is advisable to change the heat range of spark plugs and newly select the proper main jet.
- When checking the discoloration of spark plugs, be sure to stop the engine immediately after a run and check.
- Avoid racing.
- When changing the heat range of spark plugs, never attempt to change it more than ±1 rank.
- When using a spark plug other than standard, check its heat range against the standard and check that it is a resistance type.
- Note that even if the discoloration seems proper, it may slightly vary with the spark plug maker and oil in use.

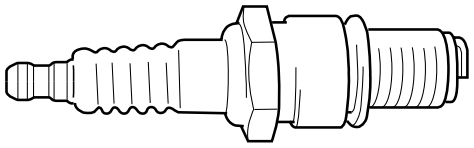

CHASSIS

SELECTION OF THE SECONDARY REDUCTION RATIO (SPROCKET)

Secondary reduction ratio = Number of rear wheel sprocket teeth/Number of drive sprocket teeth	
Standard secondary reduction ratio	**48/13 (3.692)**

<Requirement for selection of secondary gear reduction ratio>

- It is generally said that the secondary gear ratio should be reduced for a longer straight portion of a speed course and should be increased for a course with many corners. Actually, however, as the speed depends on the ground condition of the day of the race, be sure to run through the circuit to set the machine suitable for the entire course.
- In actuality, it is very difficult to achieve settings suitable for the entire course and some settings may be sacrificed. Thus, the settings should be matched to the portion of the course that has the greatest effect on the race result. In such a case, run through the entire course while making notes of lap times to find the best balance; then, determine the secondary reduction ratio.
- If a course has a long straight portion where a machine can run at maximum speed, the machine is generally set such that it can develop its maximum revolutions toward the end of the straight line, with care taken to avoid the engine over-revving.

TIP

Riding technique varies from rider to rider and the performance of a machine also vary from machine to machine. Therefore, do not imitate other rider's settings from the beginning but choose your own setting according to the level of your riding technique.

DRIVE AND REAR WHEEL SPROCKETS SETTING PARTS

Part name	Size	Part number
Drive sprocket "1"		
(STD)	**13T**	**9383B-13218**
Rear wheel sprocket "2"		
	47T	**1C3-25447-00**
(STD)	**48T**	**1C3-25448-00**
	49T	**1C3-25449-00**
	50T	**1C3-25450-00**
	51T	**1C3-25451-00**
	52T	**1C3-25452-00**

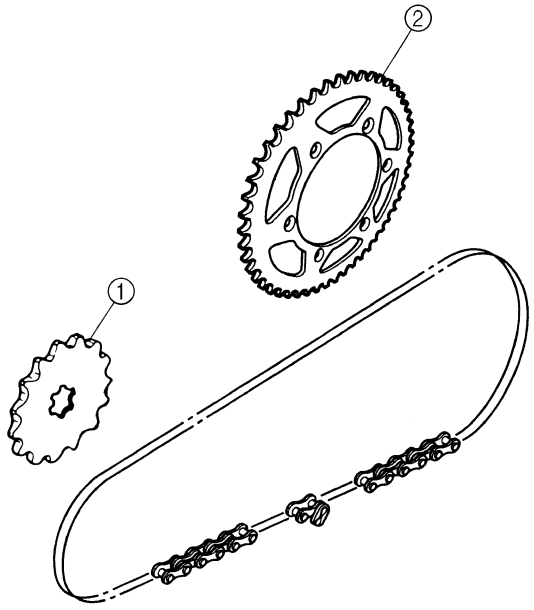

TIRE PRESSURE

Tire pressure should be adjust to suit the road surface condition of the circuit.

Standard tire pressure:
100 kPa (1.0 kgf/cm^2, 15 psi)

- Under a rainy, muddy, sandy, or slippery condition, the tire pressure should be lower for a larger area of contact with the road surface.

Extent of adjustment:
60–80 kPa (0.6–0.8 kgf/cm^2, 9.0–12 psi)

• Under a stony or hard road condition, the tire pressure should be higher to prevent a flat tire.

	Extent of adjustment: **100–120 kPa (1.0–1.2 kgf/cm^2, 15–18 psi)**

FRONT FORK SETTING

The front fork setting should be made depending on the rider's feeling of an actual run and the circuit conditions.
The front fork setting includes the following three factors:

1. Setting of air spring characteristics
   • Change the fork oil amount.
2. Setting of spring preload
   • Change the spring.
3. Setting of damping force
   • Change the compression damping.
   • Change the rebound damping.
   The spring acts on the load and the damping force acts on the cushion travel speed.

CHANGE IN AMOUNT AND CHARACTERISTICS OF FORK OIL

Damping characteristic near the final stroke can be changed by changing the fork oil amount.

⚠ WARNING

Adjust the oil amount in 5 cm^3 (0.2 Imp oz, 0.2 US oz) increments or decrements. Too small oil amount causes the front fork to produce a noise at full rebound or the rider to feel some pressure on his hands or body. Alternatively, too large oil amount will cause the air spring characteristics to have a tendency to be stiffer with the consequent deteriorated performance and characteristics. Therefore, adjust the front fork within the specified range.

	Standard oil amount: **333 cm^3 (11.72 Imp oz, 11.26 US oz)** ***335 cm^3 (11.79 Imp oz, 11.33 US oz)** **Extent of adjustment:** **300–375 cm^3 (10.6–13.2 Imp oz, 10.1–12.7 US oz)**

* For EUROPE

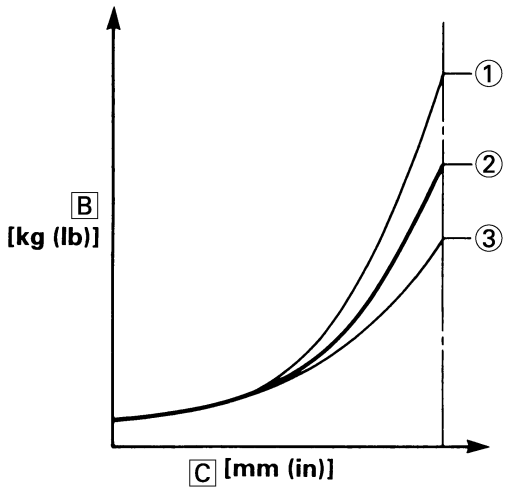

A. Air spring characteristics in relation to oil amount change
B. Load
C. Stroke
1. Max. oil amount
2. Standard oil amount
3. Min. oil amount

SETTING OF SPRING AFTER REPLACEMENT

As the front fork setting can be easily affected by rear suspension, take care so that the machine front and rear are balanced (in position, etc.) when setting the front fork.

1. Use of soft spring
   • Change the rebound damping.
   Turn out one or two clicks.
   • Change the compression damping.
   Turn in one or two clicks.

TIP

Generally a soft spring gives a soft riding feeling. Rebound damping tends to become stronger and the front fork may sink deeply over a series of gaps.

2. Use of stiff spring
   • Change the rebound damping.
   Turn in one or two clicks.
   • Change the compression damping.
   Turn out one or two clicks.

TIP
Generally a stiff spring gives a stiff riding feeling. Rebound damping tends to become weaker, resulting in lack of a sense of contact with the road surface or in a vibrating handlebar.

FRONT FORK SETTING PARTS
• Front fork spring "1"

TYPE	SPRING RATE	SPRING PART NUMBER	I.D. MARK (slits)
SOFT	0.398	1C3-23141-A1	|
	0.408	1C3-23141-B1	||
STD	0.418	1C3-23141-P0	—
STIFF	0.428	1C3-23141-D1	||||
	0.438	1C3-23141-E1	|||||
	0.449	1C3-23141-F1	|-|
	0.459	1C3-23141-G1	|-||
	0.469	1C3-23141-H1	|-|||
	0.479	1C3-23141-J1	|-||||

TIP
The I.D. mark (slits) "a" is proved on the end of the spring.

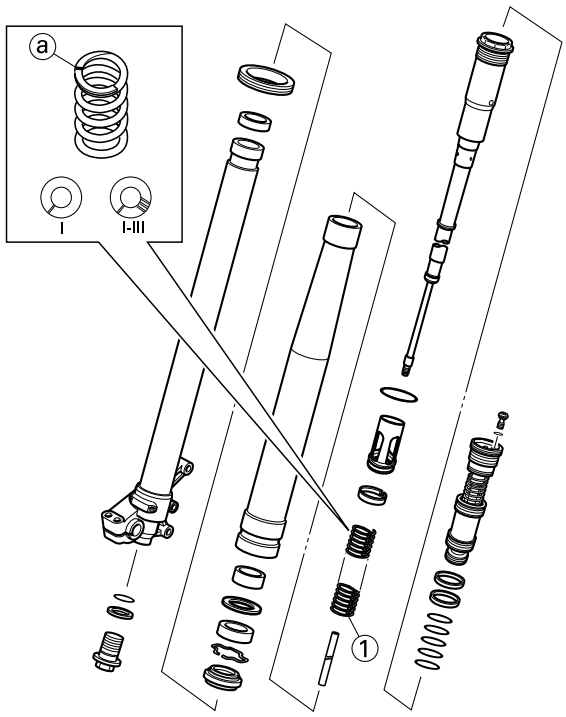

REAR SUSPENSION SETTING
The rear suspension setting should be made depending on the rider's feeling of an actual run and the circuit conditions.
The rear suspension setting includes the following two factors:
1. Setting of spring preload
   • Change the set length of the spring.
   • Change the spring.
2. Setting of damping force
   • Change the rebound damping.
   • Change the compression damping.

CHOOSING SET LENGTH
1. Place a stand or block under the engine to put the rear wheel above the floor, and measure the length "a" between the rear wheel axle center and the rear fender holding bolt.

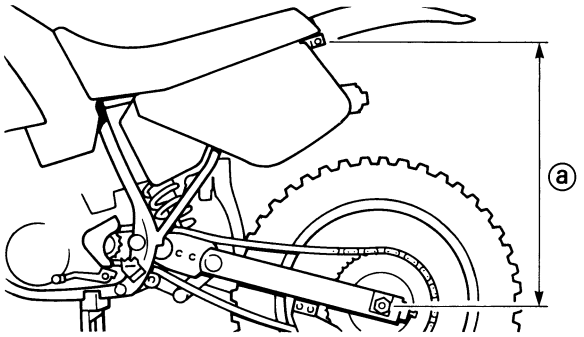

2. Remove the stand or block from the engine and with a rider astride the seat, measure the sunken length "b" between the rear wheel axle center and the rear fender holding bolt.

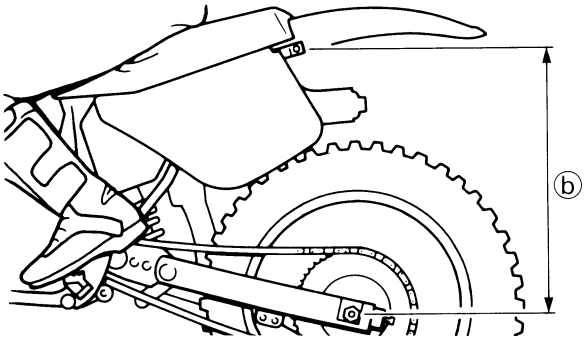

3. Loosen the locknut "1" and make adjustment by turning the spring adjuster "2" to achieve the standard figure from the subtraction of the length "b" from the length "a".

Standard figure:
90–100 mm (3.5–3.9 in)

TIP
- If the machine is new and after it is broken in, the same set length of the spring may change because of the initial fatigue, etc. of the spring. Therefore, be sure to make reevaluation.
- If the standard figure cannot be achieved by adjusting the spring adjuster and changing the spring set length, replace the spring with an optional one and make readjustment.

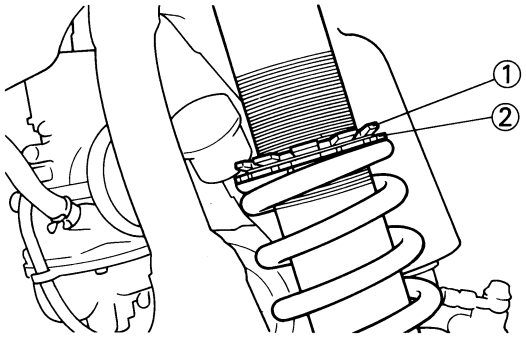

SETTING OF SPRING AFTER REPLACEMENT

After replacement, be sure to adjust the spring to the set length [sunken length 90–100 mm (3.5–3.9 in)] and set it.

1. Use of soft spring
   - Set the soft spring for less rebound damping to compensate for its less spring load. Run with the rebound damping adjuster one or two clicks on the softer side and readjust it to suit your preference.
2. Use of stiff spring
   - Set the soft spring for more rebound damping to compensate for its greater spring load. Run with the rebound damping adjuster one or two clicks on the stiffer side and readjust it to suit your preference.

TIP

Adjusting the rebound damping will be followed more or less by a change in the compression damping. For correction, turn the low compression damping adjuster on the softer side.

⚠ WARNING

When using a rear shock absorber other than currently installed, use the one whose overall length "a" does not exceed the standard as it may result in faulty performance. Never use one whose overall length is greater than standard.

Length "a" of standard shock: 490 mm (19.29 in)

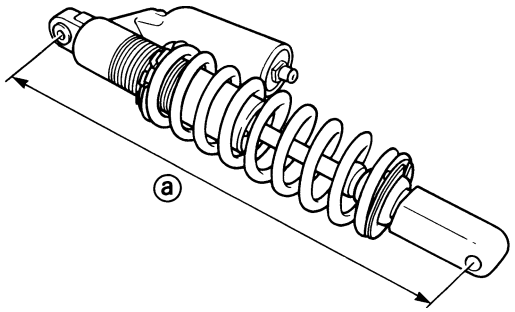

REAR SHOCK ABSORBER SETTING PARTS

• Rear shock spring "1"

[Equal-pitch titanium spring]

TYPE	SPRING RATE	SPRING PART NUMBER (-22212-)	I.D. MARK
SOFT	4.5	1C3-00	Green/1 Green/2 Green/3
STD	4.7	1C3-10	Red/1 Red/2 Red/3
STIFF	4.9	1C3-20	Black/1 Black/2 Black/3
	5.1	1C3-30	Blue/1 Blue/2 Blue/3

[Equal-pitch steel spring]

TYPE	SPRING RATE	SPRING PART NUMBER (-22212-)	I.D. MARK/ Q'TY
SOFT	4.3	5UN-00	Brown/1
	5.3	5UN-50	Yellow/1
	5.5	5UN-60	Pink/1
STIFF	5.7	5UN-70	White/1

[Unequal-pitch steel spring]

TYPE	SPRING RATE (approx.)	SPRING PART NUMBER (-22212-)	I.D. MARK/ Q'TY
SOFT	4.5	5UN-A0	Green/2
	4.7	5UN-B0	Red/2
	4.9	5UN-C0	Black/2
	5.1	5UN-D0	Blue/2
	5.3	5UN-E0	Yellow/2
	5.5	5UN-F0	Pink/2
STIFF	5.7	5UN-G0	White/2

NOTICE

Install the spring seat "2" to the titanium spring.

TIP

- The unequal-pitch spring is softer in initial characteristic than the equal-pitch spring and is difficult to bottom out under full compression.
- The I.D. mark "a" is marked at the end of the spring.
- Spring specification varies according to the color and quantity of I.D. marks.

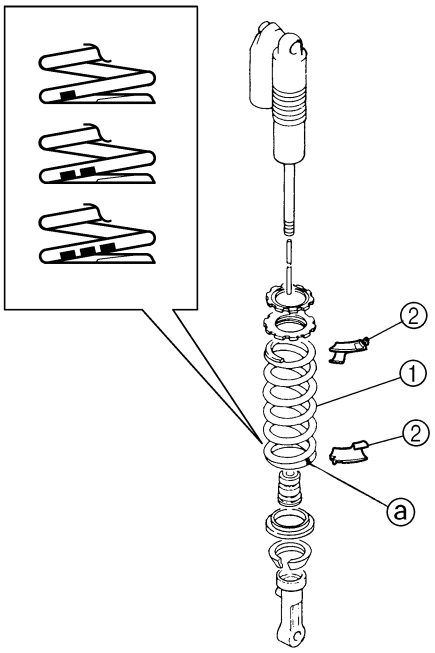

• Extent of adjustment (spring preload)

Maximum	Minimum
Position in which the spring is turned in 13 mm (0.51 in) from its free length.	**Position in which the spring is turned in 1.5 mm (0.06 in) from its free length.**

TIP

- For the spring preload adjustment, refer to "ADJUSTING THE REAR SHOCK ABSORBER SPRING PRELOAD" in the CHAPTER 3.
- Preload adjusting extent is the same for the titanium and steel springs.

SUSPENSION SETTING (FRONT FORK)

TIP

- If any of the following symptoms is experienced with the standard position as the base, make resetting by reference to the adjustment procedure given in the same chart.
- Before any change, set the rear shock absorber sunken length to the standard figure 90–100 mm (3.5–3.9 in).

Symptom	Section				Check	Adjust
	Jump	Large gap	Medium gap	Small gap		
Stiff over entire range	○	○	○		Compression damping	Turn adjuster counterclockwise (about 2 clicks) to decrease damping.
					Oil amount	Decrease oil amount by about 5–10 cm^3 (0.2–0.4 Imp oz, 0.2–0.3 US oz).
					Spring	Replace with soft spring.
Unsmooth movement over entire range	○	○	○	○	Outer tube Inner tube	Check for any bends, dents, and other noticeable scars, etc. If any, replace affected parts.
					Slide metal	Replace with a new one for extended use.
					Piston metal	Replace with a new one for extended use.
					Under bracket tightening torque	Retighten to specified torque.
Poor initial movement				○	Rebound damping	Turn adjuster counterclockwise (about 2 clicks) to decrease damping.
					Oil seal	Apply grease in oil seal wall.
Soft over entire range, bottoming out	○	○			Compression damping	Turn adjuster clockwise (about 2 clicks) to increase damping.
					Oil amount	Increase oil amount by about 5–10 cm^3 (0.2–0.4 Imp oz, 0.2–0.3 US oz).
					Spring	Replace with stiff spring.
Stiff toward stroke end	○				Oil amount	Decrease oil amount by about 5 cm^3 (0.2 Imp oz,0.2 US oz).
Soft toward stroke end, bottoming out	○				Oil amount	Increase oil amount by about 5 cm^3 (0.2 Imp oz,0.2 US oz).
Stiff initial movement	○	○	○	○	Compression damping	Turn adjuster counterclockwise (about 2 clicks) to decrease damping.
Low front, tending to lower front posture			○	○	Compression damping	Turn adjuster clockwise (about 2 clicks) to increase damping.
					Rebound damping	Turn adjuster counterclockwise (about 2 clicks) to decrease damping.
					Balance with rear end	Set sunken length for 95–100 mm (3.7–3.9 in) when one passenger is astride seat (lower rear posture).
					Oil amount	Increase oil amount by about 5 cm^3 (0.2 Imp oz, 0.2 US oz).
"Obtrusive" front, tending to upper front posture			○	○	Compression damping	Turn adjuster counterclockwise (about 2 clicks) to decrease damping.
					Balance with rear end	Set sunken length for 90–95 mm (3.5–3.7 in) when one passenger is astride seat (upper rear posture).
					Spring	Replace with soft spring.
					Oil amount	Decrease oil amount by about 5–10 cm^3 (0.2–0.4 Imp oz, 0.2–0.3 US oz).

SUSPENSION SETTING (REAR SHOCK ABSORBER)

TIP

- If any of the following symptoms is experienced with the standard position as the base, make resetting by reference to the adjustment procedure given in the same chart.
- Adjust the rebound damping in 2-click increments or decrements.
- Adjust the low compression damping in 1-click increments or decrements.
- Adjust the high compression damping in 1/6 turn increments or decrements.

Symptom	Section				Check	Adjust
	Jump	Large gap	Medium gap	Small gap		
Stiff, tending to sink			○	○	Rebound damping	Turn adjuster counterclockwise (about 2 clicks) to decrease damping.
					Spring set length	Set sunken length for 90–100 mm (3.5–3.9 in) when one passenger is astride seat.
Spongy and unstable			○	○	Rebound damping	Turn adjuster clockwise (about 2 clicks) to increase damping.
					Low compression damping	Turn adjuster clockwise (about 1 click) to increase damping.
					Spring	Replace with stiff spring.
Heavy and dragging			○	○	Rebound damping	Turn adjuster counterclockwise (about 2 clicks) to decrease damping.
					Spring	Replace with soft spring.
Poor road gripping				○	Rebound damping	Turn adjuster counterclockwise (about 2 clicks) to decrease damping.
					Low compression damping	Turn adjuster clockwise (about 1 clicks) to increase damping.
					High compression damping	Turn adjuster clockwise (about 1/6 turn) to increase damping.
					Spring set length	Set sunken length for 90–100 mm (3.5–3.9 in) when one passenger is astride seat.
					Spring	Replace with soft spring.
Bottoming out	○	○			High compression damping	Turn adjuster clockwise (about 1/6 turn) to increase damping.
					Spring set length	Set sunken length for 90–100 mm (3.5–3.9 in) when one passenger is astride seat.
					Spring	Replace with stiff spring.
Bouncing	○	○			Rebound damping	Turn adjuster clockwise (about 2 clicks) to increase damping.
					Spring	Replace with soft spring.
Stiff travel	○	○			High compression damping	Turn adjuster counterclockwise (about 1/6 turn) to decrease damping.
					Spring set length	Set sunken length for 90–100 mm (3.5–3.9 in) when one passenger is astride seat.
					Spring	Replace with soft spring.

PROTECT YOUR INVESTMENT

Use Genuine YAMAHA Parts And Accessories



YAMAHA MOTOR CO., LTD.
2500 SHINGAI IWATA SHIZUOKA JAPAN

PRINTED ON RECYCLED PAPER

PRINTED IN JAPAN
2008.4—0.4 × 1
(E)