YAMAHA

2025

OWNER'S SERVICE MANUAL

YZ250

⚠ Read this manual carefully before operating this vehicle.

YZ250S

LIT-11626-38-54

D69-2819U-10

WARNING: Operating, servicing and maintaining a passenger vehicle or off-road vehicle can expose you to chemicals including engine exhaust, carbon monoxide, phthalates, and lead, which are known to the State of California to cause cancer and birth defects or other reproductive harm. To minimize exposure, avoid breathing exhaust, do not idle the engine except as necessary, service your vehicle in a well-ventilated area and wear gloves or wash your hands frequently when servicing your vehicle. For more information go to www.P65Warnings.ca.gov/passenger-vehicle

Read this manual carefully before operating this vehicle. This manual should stay with this vehicle if it is sold.

EAM20080

YZ250S
OWNER'S SERVICE MANUAL
©2025 by Yamaha Motor Corporation, U.S.A.
First edition, July 2024
All rights reserved.
Any reproduction or unauthorized use
without the written permission of
Yamaha Motor Corporation, U.S.A.
is expressly prohibited.
P/N. LIT-11626-38-54

EAM20180

IMPORTANT

Congratulations on your purchase of a Yamaha YZ series. This model is the culmination of Yamaha's vast experience in the production of pacesetting racing machines. It represents the highest grade of craftsmanship and reliability that have made Yamaha a leader.

This manual explains operation, inspection, basic maintenance and tuning of your machine. If you have any questions about this manual or your machine, please contact your Yamaha dealer.

TIP

- Yamaha continually seeks advancements in product design and quality. Therefore, while this manual contains the most current product information available at the time of printing, there may be minor discrepancies between your machine and this manual. If you have any questions concerning this manual, please consult your Yamaha dealer.
- This manual is intended for those who have basic knowledge and skill concerning the servicing of Yamaha motorcycles (e.g., Yamaha dealers, service engineers, etc.). Those who have little knowledge and skill concerning servicing are requested not to undertake inspection, adjustment, disassembly, or reassembly only by reference to this manual. It may lead to servicing trouble and mechanical damage.

EWA20270

⚠ WARNING

PLEASE READ THIS MANUAL CAREFULLY AND COMPLETELY BEFORE OPERATING THIS MACHINE. DO NOT ATTEMPT TO OPERATE THIS MACHINE UNTIL YOU HAVE ATTAINED A SATISFACTORY KNOWLEDGE OF ITS CONTROLS AND OPERATING FEATURES AND UNTIL YOU HAVE BEEN TRAINED IN SAFE AND PROPER RIDING TECHNIQUES. REGULAR INSPECTIONS AND CAREFUL MAINTENANCE, ALONG WITH GOOD RIDING SKILLS, WILL ENSURE THAT YOU SAFETY ENJOY THE CAPABILITIES AND THE RELIABILITY OF THIS MACHINE.

EAM30001

IMPORTANT MANUAL INFORMATION

Particularly important information is distinguished in this manual by the following notations.

⚠	**This is the safety alert symbol. It is used to alert you to potential personal injury hazards. Obey all safety messages that follow this symbol to avoid possible injury or death.**
⚠ WARNING	**A WARNING indicates a hazardous situation which, if not avoided, could result in death or serious injury.**
NOTICE	**A NOTICE indicates special precautions that must be taken to avoid damage to the vehicle or other property.**
TIP	A TIP provides key information to make procedures easier or clearer.

EAM20204

YAMAHA MOTOR CORPORATION, U.S.A. 2020 AND LATER MODEL YZ/ WR MOTORCYCLE LIMITED WARRANTY

Yamaha Motor Corporation, U.S.A. hereby warrants to the original retail purchaser that the following components equipped on new Yamaha YZ or WR motorcycles purchased from an authorized Yamaha motorcycle dealer in the continental United States will be free from defects in material and workmanship for the period of time stated herein, subject to certain stated limitations. YZ or WR components included under this warranty are the engine, frame, swingarm, and monoshock. It is understood that the balance of the YZ or WR components are not covered by any warranty, expressed or implied. The balance of the components equipped on the unit are sold on an "as is" basis. This warranty applies to the original purchaser only and is not transferable.

THE PERIOD OF WARRANTY for the above-listed Yamaha YZ or WR components as originally installed on the unit shall be thirty (30) days from the date of purchase.

DURING THE PERIOD OF WARRANTY any authorized Yamaha motorcycle dealer will, free of charge, repair or replace, at Yamaha's option, any part adjudged defective by Yamaha due to faulty workmanship or material from the factory. Parts used in warranty repairs will be warranted for the balance of the product's warranty period. All parts replaced under warranty become property of Yamaha Motor Corporation, U.S.A.

GENERAL EXCLUSIONS from this warranty shall include any failures caused by:

a. Installation of parts or accessories that are not qualitatively equivalent to genuine Yamaha parts.
b. Abnormal strain, neglect, or abuse.
c. Accident or collision damage.
d. Modification to original parts.
e. Lack of proper maintenance.
f. Damage due to improper transportation.

SPECIFIC EXCLUSIONS from this warranty shall include parts replaced due to normal wear or routine maintenance.

THE CUSTOMER'S RESPONSIBILITY under this warranty shall be to:

1. Operate and maintain the YZ or WR as specified in the appropriate Owner's Service Manual, and
2. Give notice to an authorized Yamaha motorcycle dealer of any and all apparent defects within ten (10) days after discovery, and make the machine available at that time for inspection and repairs at such dealer's place of business.

EMISSION CONTROL SYSTEM WARRANTY

Yamaha Motor Corporation, U.S.A. also warrants to the ultimate purchaser and each subsequent purchaser of each 2006 and later model Yamaha WR motorcycle covered by this warranty that the vehicle is designed, built, and equipped so as to conform at the time of sale with all U.S. emissions standards applicable at the time of manufacture and that it is free from defects in materials and workmanship which would cause it not to meet these standards within the period listed immediately below. Failures other than those resulting from defects in material or workmanship which arise solely as a result of owner abuse and/or lack of proper maintenance are not covered by this warranty. YZ models are closed-course use only and are not regulated, and are therefore not covered by this Emission Control System warranty.

All 2006 and Later WR Models

Thirty (30) months from the original purchase date

YAMAHA MOTOR CORPORATION, U.S.A. MAKES NO OTHER WARRANTY OF ANY KIND, EXPRESSED OR IMPLIED. ALL IMPLIED WARRANTIES OF MERCHANTABILITY AND FITNESS FOR A PARTICULAR PURPOSE WHICH EXCEED THE OBLIGATIONS AND TIME LIMITS STATED IN THIS WARRANTY ARE HEREBY DISCLAIMED BY YAMAHA MOTOR CORPORATION, U.S.A. AND EXCLUDED FROM THIS WARRANTY.

SOME STATES DO NOT ALLOW LIMITATIONS ON HOW LONG AN IMPLIED WARRANTY LASTS, SO THE ABOVE LIMITATION MAY NOT APPLY TO YOU. ALSO EXCLUDED FROM THIS WARRANTY ARE ANY INCIDENTAL OR CONSEQUENTIAL DAMAGES INCLUDING LOSS OF USE. SOME STATES DO NOT ALLOW THE EXCLUSION OR LIMITATION OF INCIDENTAL OR CONSEQUENTIAL DAMAGES, SO THE ABOVE EXCLUSION MAY NOT APPLY TO YOU.

THIS WARRANTY GIVES YOU SPECIFIC LEGAL RIGHTS, AND YOU MAY ALSO HAVE OTHER RIGHTS WHICH VARY FROM STATE TO STATE.

YAMAHA MOTOR CORPORATION, U.S.A.
Post Office Box 6555
Cypress, California 90630
1-800-962-7926

WARRANTY QUESTIONS AND ANSWERS

Q. What costs are my responsibility during the warranty period?
A. The customer's responsibility includes all costs of normal maintenance services, non warranty repairs, accident and collision damage, and oil, oil filters, air filters, spark plugs, and brake shoes or pads.

Q. What are some examples of "abnormal" strain, neglect, or abuse?
A. These terms are general and overlap each other in areas. Specific examples include: Running the machine without oil; operating the machine with a broken or damaged part which causes another part to fail, damage or failure due to improper or, careless transportation and or tie down; and so on. If you have any specific questions on operation or maintenance, please contact your dealer for advice.

Q. Does the warranty cover incidental costs such as towing or transportation due to a failure?
A. No. The warranty is limited to repair of the machine itself.

Q. May I perform any or all of the recommended maintenance shown in the Owner's Service Manual instead of having the dealer do them?
A. Yes, if you are a qualified mechanic and follow the procedures specified in the Owner's Service Manual. We do recommend, however, that items requiring special tools or equipment be done by a Yamaha motorcycle dealer.

Q. Will the warranty be void or cancelled if I do not operate or maintain my new YZ or WR exactly as specified in the Owner's Service Manual?
A. No. The warranty on a new motorcycle cannot be "voided" or "cancelled." **However, if a particular failure is caused by operation or maintenance other than as shown in the Owner's Service Manual, that failure may not be covered under warranty.**

Q. What responsibility does my dealer have under this warranty?
A. Each Yamaha motorcycle dealer is expected to:
1. Completely set up every new machine before sale.
2. Explain the operation, maintenance, and warranty requirements to your satisfaction at the time of sale, and upon your request at any later date.
In addition, each Yamaha motorcycle dealer is held responsible for his setup, service and warranty repair work.

Q. Does the warranty on the engine include the carburetor, air filter, air box, and exhaust pipe?
A. No. The warranty covers only the engine components.

CUSTOMER SERVICE

If your machine requires warranty service, you must take it to any authorized Yamaha motorcycle dealer within the continental United States. Be sure to bring your warranty registration identification or other valid proof of the original date of purchase. If a question or problem arises regarding warranty, first contact the owner of the dealer-ship. Since all warranty matters are handled at the dealer level, this person is in the best position to help you. If you are still not satisfied and require additional assistance, please write:

YAMAHA MOTOR CORPORATION U.S.A.
CUSTOMER RELATIONS DEPARTMENT
P.O. Box 6555
Cypress, California 90630

When contacting Yamaha Motor Corporation, U.S.A. don't forget to include any important information such as names, addresses, model, VIN (vehicle identification number), dates, and receipts.

CHANGE OF ADDRESS

The federal government requires each manufacturer of a motor vehicle to maintain a complete, up-to-date list of all first purchasers against the possibility of a safety-related defect and recall. This list is compiled from the purchase registrations sent to Yamaha Motor Corporation, U.S.A. by the selling dealer at the time of your purchase.

If you should move after you have purchased your new motorcycle, please advise us of your new address by sending a postcard listing your motorcycle model name, VIN number, dealer number (or dealer's name) as it is shown on your warranty identification, your name and new mailing address. Mail to:

YAMAHA MOTOR CORPORATION, U.S.A.
WARRANTY DEPARTMENT
1270 Chastain Road
Kennesaw, GA 30144

This will ensure that Yamaha Motor Corporation, U.S.A. has an up-to-date registration record in accordance with federal law.

EAM20082

HOW TO USE THIS MANUAL

In this manual, descriptions of installation, removal, disassembly, assembly, check, and adjustment procedures are laid out with the individual steps in sequential order.

- The manual is divided into chapters and each chapter is divided into sections. The current section title "1" is shown at the top of each page.
- Sub-section titles "2" appear in smaller print than the section title.
- To help identify parts and clarify procedure steps, there are exploded diagrams "3" at the start of each removal and disassembly section.
- Numbers "4" are given in the order of the jobs in the exploded diagram. A number indicates a removal or a disassembly step.
- Symbols "5" indicate parts to be lubricated or replaced.
  Refer to "SYMBOLS".
- A job instruction chart "6" accompanies the exploded diagram, providing the order of jobs, the names of parts, the notes in jobs, etc. This step explains removal and disassembly procedure only. For installation and assembly procedure, reverse the steps.
- Jobs "7" requiring more information (such as special tools and technical data) are described sequentially.

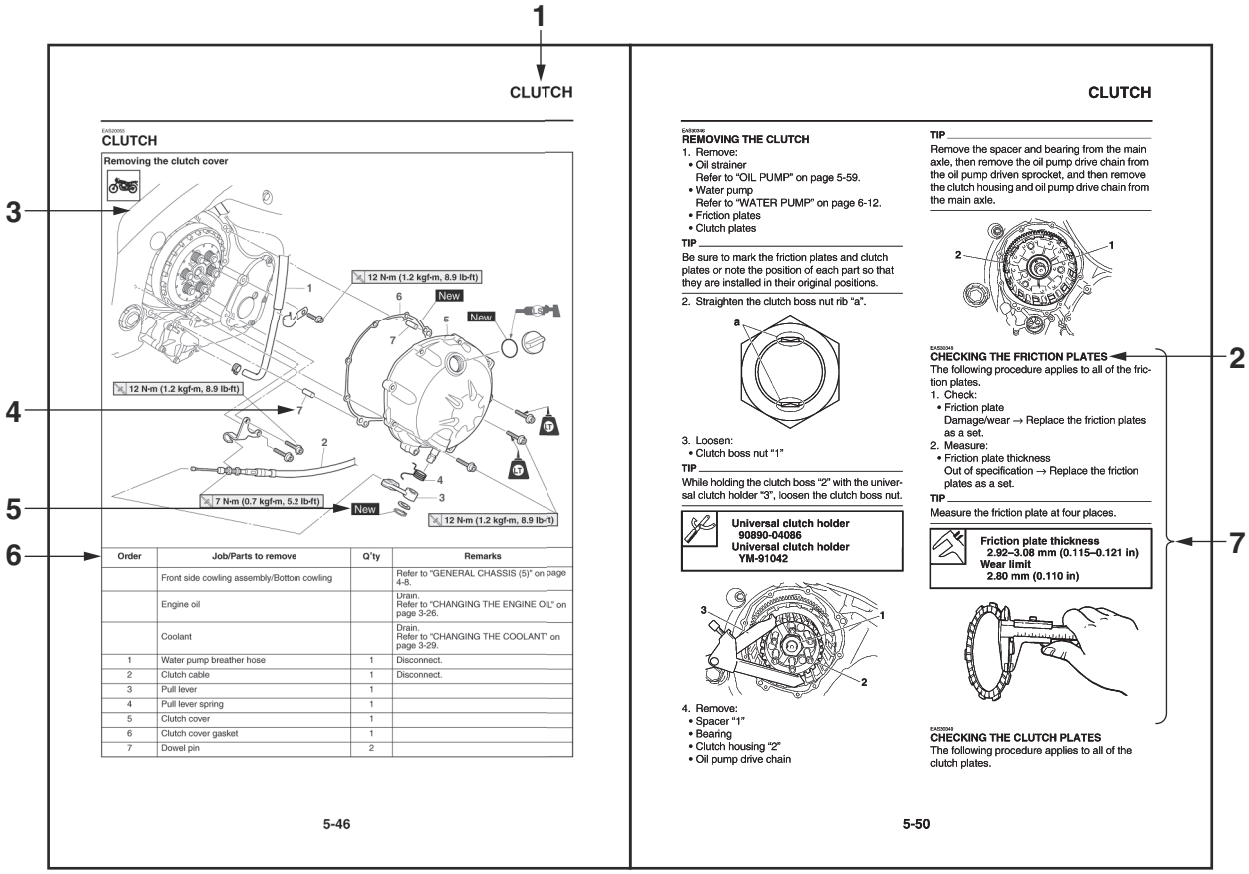

G088877

EAM20083

SYMBOLS

The following symbols are used in this manual for easier understanding.

TIP

The following symbols are not relevant to every vehicle.

SYMBOL	DEFINITION	SYMBOL	DEFINITION
	Serviceable with engine mounted	G	Gear oil
	Filling fluid	M	Molybdenum disulfide oil
	Lubricant	BF	Brake fluid
	Special tool	B	Wheel bearing grease
	Tightening torque	LS	Lithium-soap-based grease
	Wear limit, clearance	M	Molybdenum disulfide grease
	Engine speed	S	Silicone grease
	Electrical data	LT	Apply locking agent (LOCTITE®).
E	Engine oil	New	Replace the part with a new one.

EAM10003

TABLE OF CONTENTS

GENERAL INFORMATION	1
SPECIFICATIONS	2
PERIODIC CHECKS AND ADJUSTMENTS	3
CHASSIS	4
ENGINE	5
COOLING SYSTEM	6
FUEL SYSTEM	7
ELECTRICAL SYSTEM	8
TROUBLESHOOTING	9
TUNING	10

GENERAL INFORMATION

SAFETY INFORMATION.....1-1
FOR SAFETY, BE SURE TO OBEY THE FOLLOWING:.....1-1

LOCATION OF IMPORTANT LABELS.....1-4

DESCRIPTION.....1-6

IDENTIFICATION.....1-8
VEHICLE IDENTIFICATION NUMBER.....1-8
ENGINE SERIAL NUMBER.....1-8

INCLUDED PARTS.....1-9
SIDESTAND.....1-9
NIPPLE WRENCH.....1-9
HANDLEBAR PROTECTOR.....1-9
VALVE JOINT.....1-9
SET PIN (tool for YPVS).....1-10

IMPORTANT INFORMATION.....1-11
PREPARATION FOR REMOVAL AND DISASSEMBLY.....1-11
REPLACEMENT PARTS.....1-11
GASKETS, OIL SEALS AND O-RINGS.....1-11
LOCK WASHERS/PLATES AND COTTER PINS.....1-12
BEARINGS AND OIL SEALS.....1-12
CIRCLIPS.....1-12

BASIC SERVICE INFORMATION.....1-13
ELECTRICAL SYSTEM.....1-13

SPECIAL TOOLS.....1-15

INSTRUMENT AND CONTROL FUNCTIONS.....1-19
ENGINE STOP SWITCH.....1-19
SHIFT PEDAL.....1-19
KICKSTARTER LEVER.....1-19
FRONT BRAKE LEVER.....1-19
REAR BRAKE PEDAL.....1-19
FUEL COCK.....1-19
STARTER KNOB (CHOKE).....1-20

STARTING AND BREAK-IN.....1-21
FUEL AND ENGINE MIXING OIL.....1-21
STARTING A COLD ENGINE.....1-21
STARTING A WARM ENGINE.....1-21
BREAK-IN PROCEDURES.....1-21

MAINTENANCE AFTER BREAK-IN.....1-23
MAJOR MAINTENANCE..... 1-23
AIR FILTER MAINTENANCE.....1-23

TORQUE-CHECK POINTS.....1-24

MOTORCYCLE CARE AND STORAGE.....1-26
CARE.....1-26
STORAGE.....1-27

EAM20168

SAFETY INFORMATION

Be sure to read this manual carefully and completely in order to operate the machine safely and correctly prior to riding the Yamaha machine, and take care to maintain it properly and operate it safely.

EAM30401

FOR SAFETY, BE SURE TO OBEY THE FOLLOWING:

Be a Responsible Owner

As the vehicle's owner, you are responsible for the safe and proper operation of your motorcycle.

Motorcycles are single-track vehicles.

Their safe use and operation are dependent upon the use of proper riding techniques as well as the expertise of the operator. Every operator should know the following requirements before riding this motorcycle.

He or she should:

1. Obtain thorough instructions from a competent source on all aspects of motorcycle operation.
2. Observe the warnings and maintenance requirements in this manual.
3. Obtain qualified training in safe and proper riding techniques.
4. Obtain professional technical service as indicated in this manual and/or when made necessary by mechanical conditions.
5. Never operate a motorcycle without proper training or instruction. Take a training course. Beginners should receive training from a certified instructor. Contact an authorized motorcycle dealer to find out about the training courses nearest you.

Safe Riding

Perform the pre-operation checks each time you use the vehicle to make sure it is in safe operating condition. Failure to inspect or maintain the vehicle properly increases the possibility of an accident or equipment damage. Refer to "PRE-OPERATION INSPECTION AND MAINTENANCE" on page 3-5 for a list of pre-operation checks.

1. This motorcycle is designed for off-road use only, therefore, it is illegal to operate it on public streets, roads, or highways, even a dirt or gravel one. Off-road use on public lands may be illegal. Please check local regulations before riding.
2. This motorcycle is designed to carry the operator only. No passengers.
3. The failure of motorists to detect and recognize motorcycles in traffic is the predominating cause of automobile/motorcycle accidents. Many accidents have been caused by an automobile driver who did not see the motorcycle. Making yourself conspicuous appears to be very effective in reducing the chance of this type of accident.
   Therefore:
   - Wear a brightly colored jacket.
   - Use extra caution when you are approaching and passing through intersections, since intersections are the most likely places for motorcycle accidents to occur.
   - Ride where other motorists can see you. Avoid riding in another motorist's blind spot.
   - Never maintain a motorcycle without proper knowledge. Contact an authorized motorcycle dealer to inform you on basic motorcycle maintenance. Certain maintenance can only be carried out by certified staff.
4. Many accidents involve inexperienced operators.
   - Make sure that you are qualified and that you only lend your motorcycle to other qualified operators.
   - Know your skills and limits. Staying within your limits may help you to avoid an accident.
   - We recommend that you practice riding your motorcycle until you have become thoroughly familiar with the motorcycle and all of its controls.
5. Many accidents have been caused by error of the motorcycle operator. A typical error made by the operator is veering wide on a turn due to excessive speed or under cornering (insufficient lean angle for the speed). Never travel faster than warranted by conditions.
6. Ride cautiously in unfamiliar areas. You may encounter hidden obstacles that could cause an accident.
7. The posture of the operator is important for proper control. The operator should keep both hands on the handlebar and both feet on the operator footrests during operation to maintain control of the motorcycle.
8. Never ride under the influence of alcohol or other drugs.
9. Be sure the transmission is in neutral before starting the engine.

Protective Apparel

The majority of fatalities from motorcycle accidents are the result of head injuries. The use of a safety helmet is the single most critical factor in the prevention or reduction of head injuries.

1. Always wear an approved helmet.
2. Wear a face shield or goggles. Wind in your unprotected eyes could contribute to an impairment of vision that could delay seeing a hazard.
3. The use of a jacket, heavy boots, trousers, gloves, etc., is effective in preventing or reducing abrasions or lacerations.
4. Never wear loose-fitting clothes, otherwise they could catch on the control levers, footrests, or wheels and cause injury or an accident.
5. Always wear protective clothing that covers your legs, ankles, and feet. The engine or exhaust system become very hot during or after operation and can cause burns.

Avoid Carbon Monoxide Poisoning

All engine exhaust contains carbon monoxide, a deadly gas. Breathing carbon monoxide can cause headaches, dizziness, drowsiness, nausea, confusion, and eventually death.

Carbon Monoxide is a colorless, odorless, tasteless gas which may be present even if you do not see or smell any engine exhaust. Deadly levels of carbon monoxide can collect rapidly and you can quickly be overcome and unable to save yourself. Also, deadly levels of carbon monoxide can linger for hours or days in enclosed or poorly ventilated areas. If you experience any symptoms of carbon monoxide poisoning, leave the area immediately, get fresh air, and SEEK MEDICAL TREATMENT.

1. Do not run engine indoors. Even if you try to ventilate engine exhaust with fans or open windows and doors, carbon monoxide can rapidly reach dangerous levels.
2. Do not run engine in poorly ventilated or partially enclosed areas such as barns, garages, or carports.
3. Do not run engine outdoors where engine exhaust can be drawn into a building through openings such as windows and doors.

Genuine Yamaha Accessories

Choosing accessories for your vehicle is an important decision. Genuine Yamaha accessories, which are available only from a Yamaha dealer, have been designed, tested, and approved by Yamaha for use on your vehicle.

Many companies with no connection to Yamaha manufacture parts and accessories or offer other modifications for Yamaha vehicles. Yamaha is not in a position to test the products that these aftermarket companies produce. Therefore, Yamaha can neither endorse nor recommend the use of accessories not sold by Yamaha or modifications not specifically recommended by Yamaha, even if sold and installed by a Yamaha dealer.

Aftermarket Parts, Accessories, and Modifications

While you may find aftermarket products similar in design and quality to genuine Yamaha accessories, recognize that some aftermarket accessories or modifications are not suitable because of potential safety hazards to you or others. Installing aftermarket products or having other modifications performed to your vehicle that change any of the vehicle's design or operation characteristics can put you and others at greater risk of serious injury or death. You are responsible for injuries related to changes in the vehicle.

Keep the following guidelines in mind when mounting accessories.

1. Never install accessories that would impair the performance of your motorcycle. Carefully inspect the accessory before using it to make sure that it does not in any way reduce ground clearance or cornering clearance, limit suspension travel, steering travel or control operation.
   - Accessories fitted to the handlebar or the front fork area can create instability due to improper weight distribution. If accessories are added to the handlebar or front fork area, they must be as lightweight as possible and should be kept to a minimum.
   - Bulky or large accessories may seriously affect the stability of the motorcycle. Wind may attempt to lift the motorcycle, or the motorcycle may become unstable in cross winds.
   - Certain accessories can displace the operator from his or her normal riding position. This improper position limits the freedom of movement of the operator and may limit control ability, therefore, such accessories are not recommended.
2. Use caution when adding electrical accessories. If electrical accessories exceed the capacity of the motorcycle's electrical system, an electric failure could result, which could cause a dangerous loss of lights or engine

power.

Aftermarket Tires and Rims

The tires and rims that came with your motorcycle were designed to match the performance capabilities and to provide the best combination of handling, braking, and comfort. Other tires, rims, sizes, and combinations may not be appropriate. Refer to “CHECKING THE TIRES” on page 3-23 for tire specifications and more information on replacing your tires.

Transporting the Motorcycle

Be sure to observe following instructions before transporting the motorcycle in another vehicle.

1. Remove all loose items from the motorcycle.
2. Check that the fuel cock (if equipped) is in the “OFF” position and that there are no fuel leaks.
3. Point the front wheel straight ahead on the trailer or in the truck bed, and choke it in a rail to prevent movement.
4. Shift the transmission in gear (for models with a manual transmission).
5. Secure the motorcycle with tie-downs or suitable straps that are attached to solid parts of the motorcycle, such as the frame or upper front fork triple clamp (and not, for example, to rubber-mounted handlebars or turn signals, or parts that could break). Choose the location for the straps carefully so the straps will not rub against painted surfaces during transport.
6. The suspension should be compressed somewhat by the tie-downs, if possible, so that the motorcycle will not bounce excessively during transport.

EAM20085

LOCATION OF IMPORTANT LABELS

Please read the following important labels carefully before operating this vehicle.

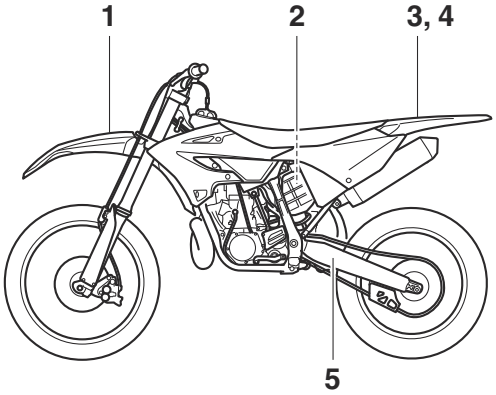

1

Use premium unleaded gasoline / oil premix only.

3XJ-2415E-A2

2

⚠WARNING

This unit contains high pressure nitrogen gas. Mishandling can cause explosion.
- Read owner's manual for instructions.
- Do not incinerate, puncture or open.

4AA-22259-80

3

⚠ WARNING

- BEFORE YOU OPERATE THIS VEHICLE, READ THE OWNER'S MANUAL AND ALL LABELS.
- NEVER CARRY A PASSENGER. You increase your risk of losing control if you carry a passenger.
- NEVER OPERATE THIS VEHICLE ON PUBLIC ROADS. You can collide with another vehicle if you operate this vehicle on a public road.
- ALWAYS WEAR AN APPROVED MOTORCYCLE HELMET, eye protection, and protective clothing.
- EXPERIENCED RIDER ONLY.

5PA-2118K-01

4

For use only on a closed course in sanctioned competition.

This motorcycle does not meet EPA noise and emissions standards and is not for general off-road recreational riding.

17D-2812P-00

5

TIRE INFORMATION

Cold tire normal pressure should be set as follows.
FRONT : 100kPa, {1.00kgf/cm^2}, 15psi
REAR : 100kPa, {1.00kgf/cm^2}, 15psi

3RV-21668-A1

EAM20086

DESCRIPTION

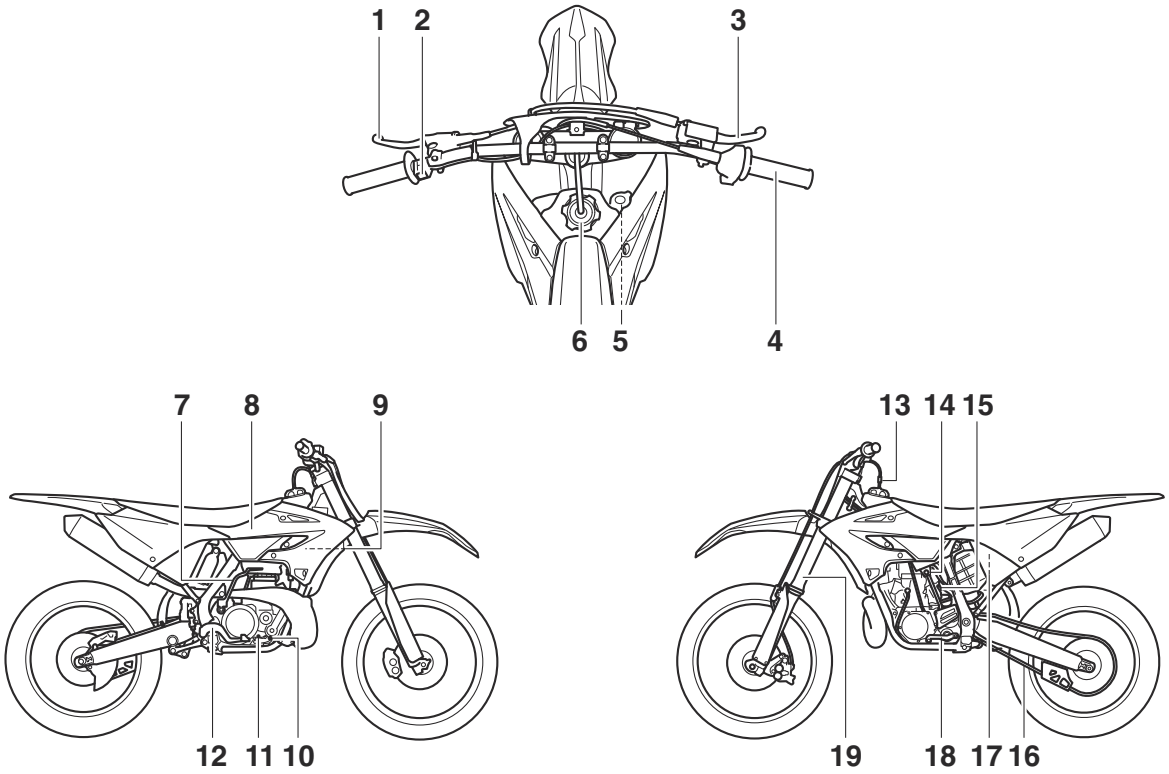

1. Clutch lever
2. Engine stop switch
3. Front brake lever
4. Throttle grip
5. Radiator cap
6. Fuel tank cap
7. Kickstarter lever
8. Fuel tank
9. Radiator
10. Coolant drain bolt
11. Check bolt (Transmission oil level)
12. Rear brake pedal
13. Valve joint
14. Fuel cock
15. Starter knob
16. Drive chain
17. Air filter
18. Shift pedal
19. Front fork

TIP

Designs and specifications of the vehicle are subject to change without notice. Therefore, please note that the descriptions in this manual may be different from those for the vehicle you have purchased.

EAM20087

IDENTIFICATION

There are two significant reasons for knowing the serial number of your vehicle:

1. When ordering parts, you can give the number to your Yamaha dealer for positive identification of the model you own.
2. If your vehicle is stolen, the authorities will need the number to search for and identify your vehicle.

EAM30002

VEHICLE IDENTIFICATION NUMBER

The vehicle identification number “1” is stamped into the right side of the frame.

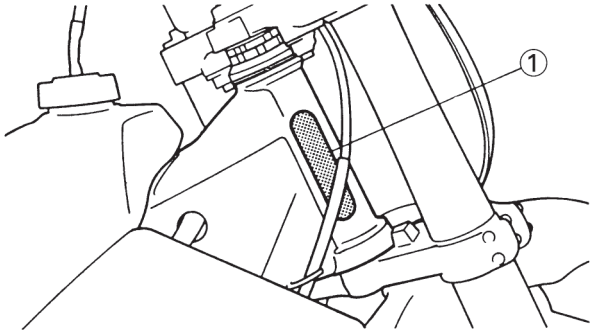

EAM30003

ENGINE SERIAL NUMBER

The engine serial number “1” is stamped into the elevated part of the right-side of the engine.

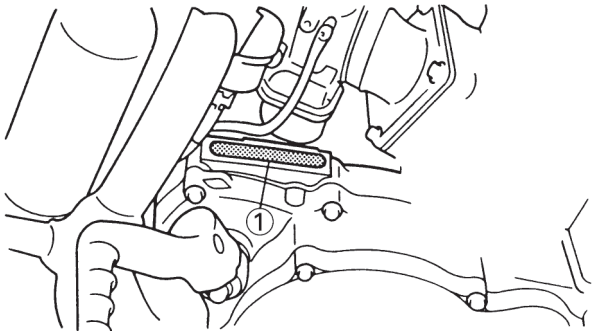

EAM20088

INCLUDED PARTS

EAM30372

SIDESTAND

This sidestand “1” is used to support only the machine when standing or transporting it.

EWA20260

WARNING

- **Never apply additional force to the sidestand.**
- **Remove this sidestand before starting out.**

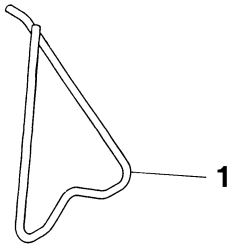

EAM30005

NIPPLE WRENCH

The nipple wrench “1” is used to tighten the spoke.

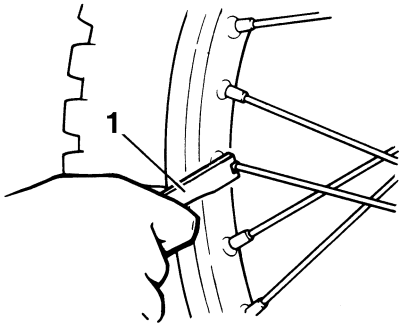

EAM30006

HANDLEBAR PROTECTOR

Install the handlebar protector “1” so that the mark “a” is facing the direction shown in the illustration.

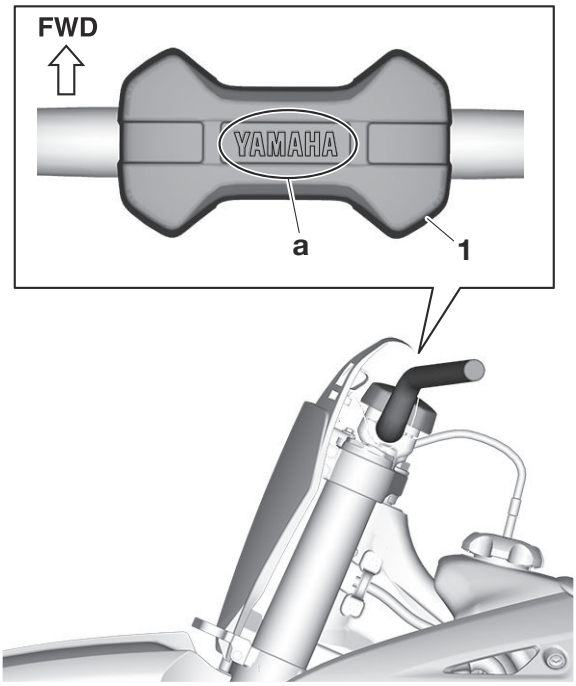

EAM30534

VALVE JOINT

This valve joint “1” prevents fuel from flowing out and is installed to the fuel tank breather hose.

ECA27110

NOTICE

In this installation, make sure the arrow faces the fuel tank and also downward.

TIP

Install the fuel tank breather hose “2” as shown, and then insert the end (on the side of the protector “3”) of the fuel tank breather hose “2” into the hole in the steering shaft.

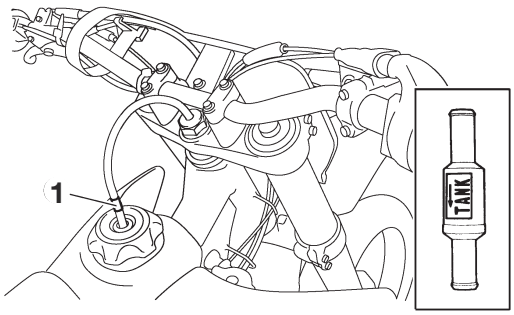

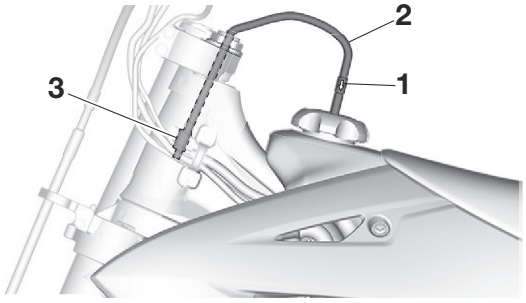

EAM30535

SET PIN (tool for YPVS)

This set pin “1” is used to remove and install the push rod of the engine.

ECA27140

NOTICE

Be sure to use the set pin. If the set pin is not used, the power valve constituent parts will result in damage.

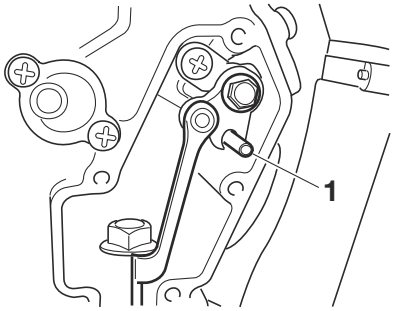

EAM20089

IMPORTANT INFORMATION

EAM30009

PREPARATION FOR REMOVAL AND DISASSEMBLY

1. Before the jobs, completely remove mud, dust, and the like in order to prevent the entry of them into the inside during the jobs.
   Refer to “CARE” on page 1-26.

2. Use proper special tools and equipment. Refer to “SPECIAL TOOLS” on page 1-15.

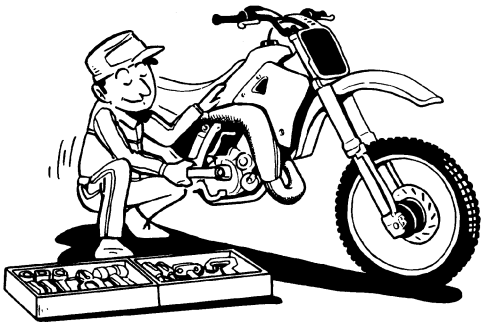

3. During disassembly, check and measure the required parts, and make a record of them so that you may refer to the record when installing them. Moreover, arrange gears, cylinders, pistons, and other parts for each section so as not to confuse or lose them.

4. During disassembly, clean each of the parts, and store them in trays for each section.
5. Flammable. Keep servicing areas away from any source of fire.
6. During servicing, take special care not to receive an injury or a burn on the engine, the exhaust pipe, the silencer, or the like.
7. If coolant is left adhered to the chassis, paint and plating will be damaged. Therefore, rinse it out with water in good time.

EWA18970

WARNING

Coolant is potentially harmful and should be handled with special care.

- **If it enters your eyes, wash it away with water enough and then get medical attention**
- **If it splashes on your skin or clothes, quickly wash it away with water and then with soapy water.**
- **If it is swallowed, immediately induce vomiting and get medical attention.**

EAM30010

REPLACEMENT PARTS

Make sure that the parts and grease or oil to be used for repair of the vehicle, including periodic replacement parts, are new YAMAHA genuine parts and recommended parts.

Do not use any used parts, because these may not be genuine though they have similar appearances or because the quality may be changed by aging.

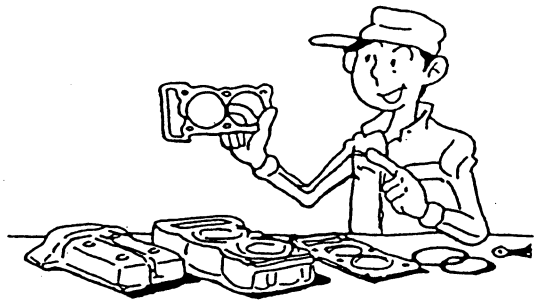

EAM30011

GASKETS, OIL SEALS AND O-RINGS

1. When overhauling the engine, replace all gaskets and O-rings. All gasket surfaces, oil seal lips, and O-rings must be cleaned so that there may be no dust on them.
2. During assembly, always apply proper oil to bearings and proper grease to oil seal lips before installation.

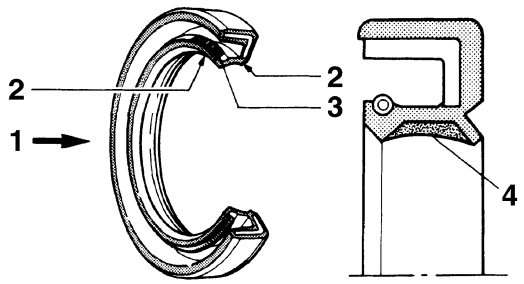

1. Oil
2. Lip
3. Spring
4. Grease

EAM30012

LOCK WASHERS/PLATES AND COTTER PINS

After removal, replace lock washers/plates “1” and cotter pins with new ones. After the bolt or nut has been tightened to specification, firmly bend the lock tabs along a flat of the bolt or nut.

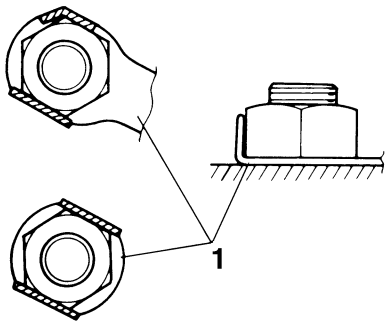

EAM30013

BEARINGS AND OIL SEALS

Install bearings “1” and oil seals “2” with their manufacturer’s marks or size symbols facing outward. During installation of an oil seal, make sure that its main lip faces the oil chamber (the target to be sealed). Before installation, always apply a light coat of grease to the oil seal lip.

ECA13300

NOTICE

Do not spin the bearing with compressed air because this will damage the bearing surfaces.

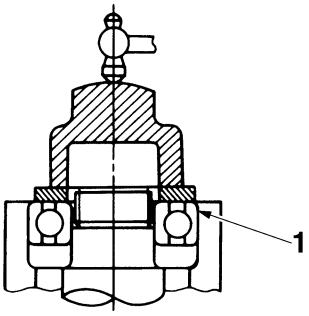

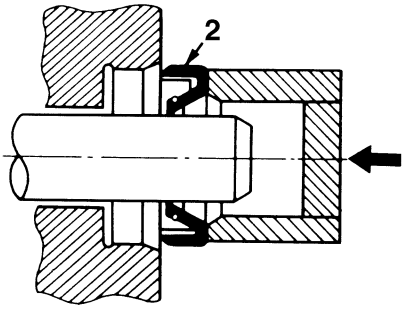

EAM30014

CIRCLIPS

When assembling parts, always use new circlips. During installation of a circlip, make sure that the edge “2” of the circlip “1” is positioned opposite to the force “3” that the circlip receives. Install the circlip with its end aligned with the center of the spline, without opening the circlip more than necessary.

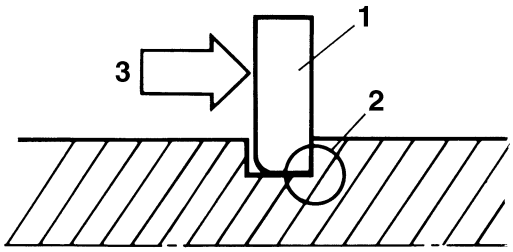

EAM20120
BASIC SERVICE INFORMATION

EAM30181
ELECTRICAL SYSTEM
Checking the electrical system

ECA14371
NOTICE

Never insert the tester probes into the coupler terminal slots. Always insert the probes from the opposite end "a" of the coupler, taking care not to loosen or damage the leads.

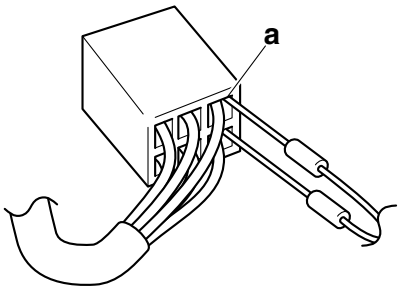

ECA16640
NOTICE

For waterproof couplers, never insert the tester probes directly into the coupler. When performing any checks using a waterproof coupler, use the specified test harness or a suitable commercially available test harness.

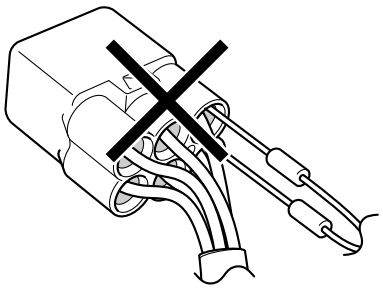

Checking the connections
Check the leads, couplers, and connectors for stains, rust, moisture, etc.

1. Disconnect:
   - Lead
   - Coupler
   - Connector

ECA16780
NOTICE

- **When disconnecting a coupler, release the coupler lock, hold both sections of the coupler securely, and then disconnect the coupler.**
- **There are many types of coupler locks; therefore, be sure to check the type of coupler lock before disconnecting the coupler.**

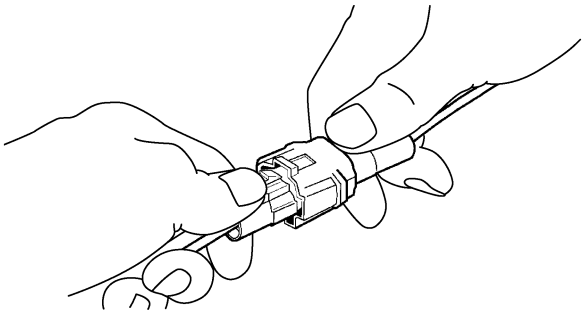

ECA16790
NOTICE

When disconnecting a connector, do not pull the leads. Hold both sections of the connector securely, and then disconnect the connector.

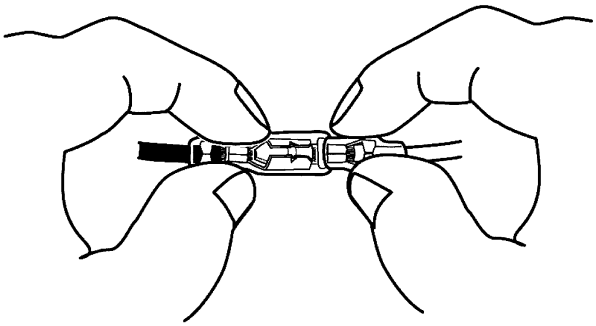

2. Check:
   - Lead
   - Coupler
   - Connector
     Moisture → Dry with compressed air.
     Rust/stains → Connect and disconnect several times.

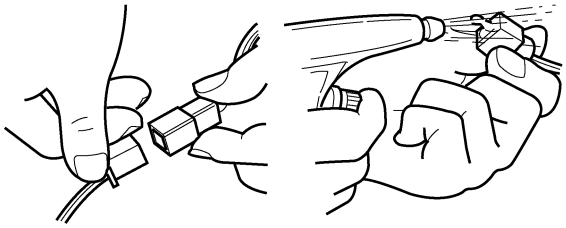

3. Check:
   - All connections
     Loose connection → Connect properly.

TIP
- If the pin "1" on the terminal is flattened, bend it up.
- After disassembling or assembling a coupler,

pull on the leads to make sure that they are installed securely.

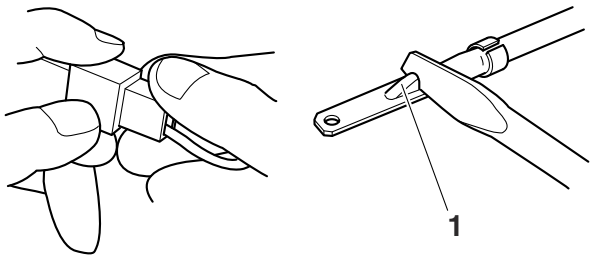

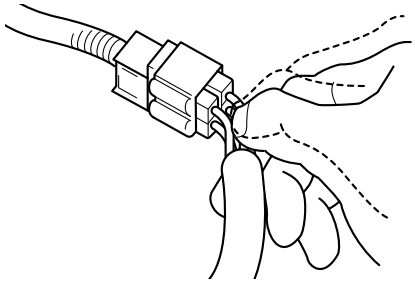

4. Connect:
   - Lead
   - Coupler
   - Connector

TIP
- When connecting a coupler or connector, make sure that both terminals are connected securely.
- Make sure all connections are tight.

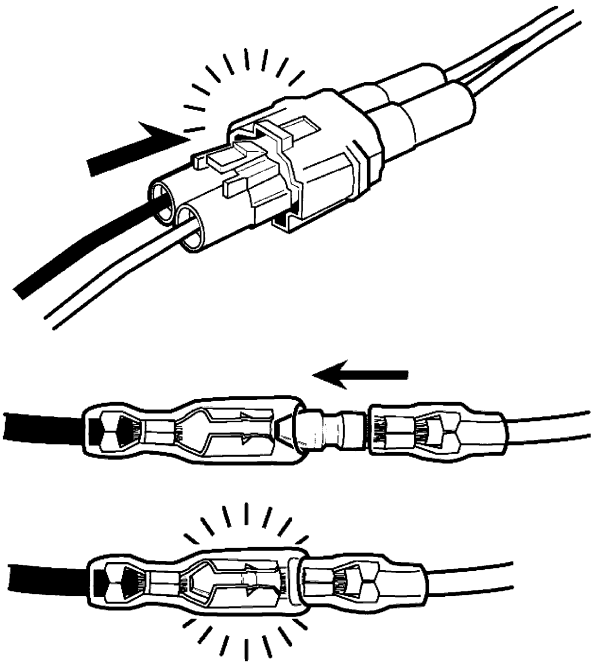

5. Check:
   - No continuity

	Digital circuit tester (CD732) **90890-03243** **Model 88 Multimeter with tachometer** **YU-A1927**

TIP
- If there is no continuity, clean the terminals.
- When checking the wire harness, perform steps (1) to (4).
- As a quick remedy, use a contact revitalizer available at most part stores.

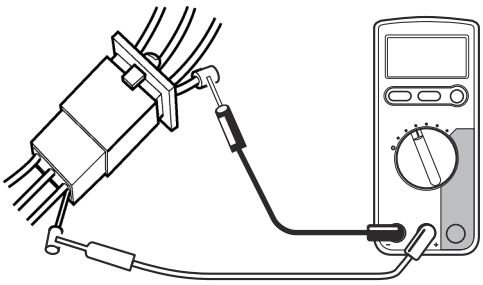

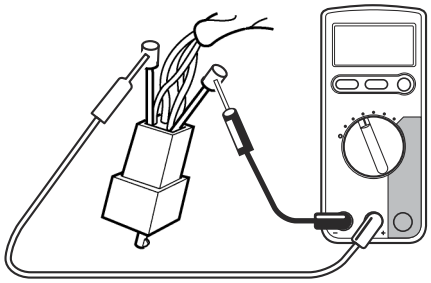

EAM20121

SPECIAL TOOLS

The following special tools are required for accurate and complete adjustment and assembly. Using the correct special tool will help prevent damage caused by the use of improper tools or improvised techniques. The shape and tool number used for the special tool differ by country, so two types are provided. Refer to the list provided to avoid errors when placing an order.

TIP

- For U.S.A. and Canada, use tool number starting with “YM-”, “YU-”, or “ACC-”.
- For others, use tool number starting with “90890-”.

Tool name/Tool No.	Illustration	Reference pages
Digital circuit tester (CD732) 90890-03243 Model 88 Multimeter with tachometer YU-A1927	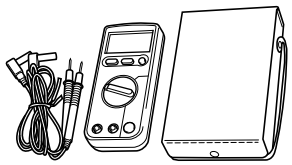	1-14, 8-9, 8-11, 8-11, 8-12, 8-12, 8-12, 8-13
Steering nut wrench 90890-01403 Exhaust flange nut wrench YU-A9472	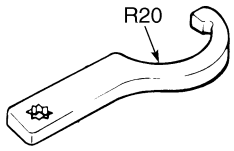	3-18, 4-58
Spoke nipple wrench (6–7) 90890-01521 Spoke nipple wrench (6–7) YM-01521	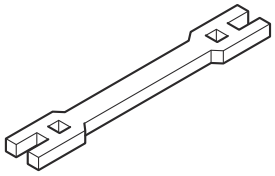	3-24
Dial gauge set 90890-03238 YU-03097-B	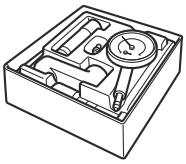	3-26
Cap bolt ring wrench 90890-01501 Cap bolt ring wrench YM-01501	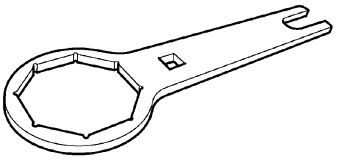	4-45, 4-45, 4-46, 4-48, 4-52, 4-53
Cap bolt wrench 90890-01911	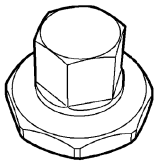	4-46, 4-48
Fork seal driver 90890-01502 Fork seal driver (48) YM-A0948	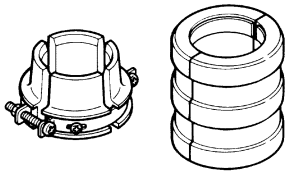	4-50, 4-50

Tool name/Tool No.	Illustration	Reference pages
Piston pin puller set 90890-01304 Piston pin puller YU-01304	90890-01304 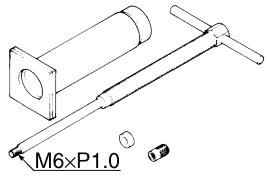 YU-01304 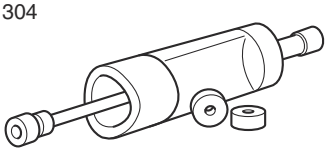	5-6
Rotor holding tool (including handle and 3 pins) 90890-04195	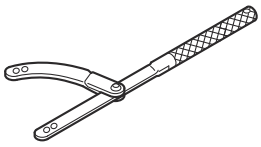	5-16, 5-17
Flywheel puller 90890-01189 Flywheel puller YM-01189	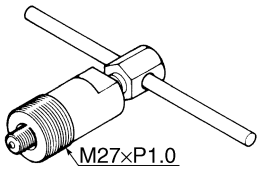 	5-16
Clutch holder 90890-04199 Universal clutch holder YM-91042	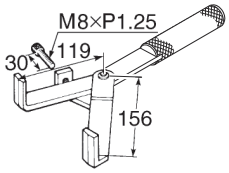 YM-91042 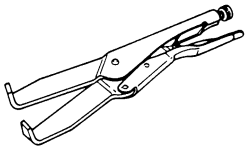	5-28, 5-30
Thickness gauge 90890-03268 Feeler gauge set YU-26900-9	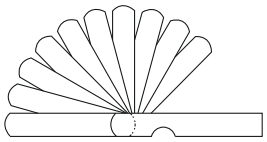	5-28
Crankcase separating tool 90890-01135 Crankcase separator YU-01135-B	90890-01135 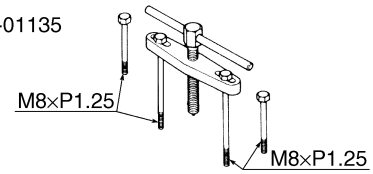 YU-01135-B 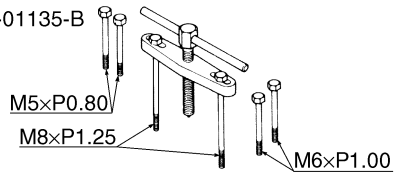 	5-39, 5-42

Tool name/Tool No.	Illustration	Reference pages
Yamaha bond No. 1215 90890-85505 Three bond No. 1215®	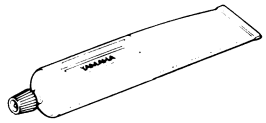	5-40
Crankshaft installer pot 90890-01274 Installing pot YU-90058	90890-01274 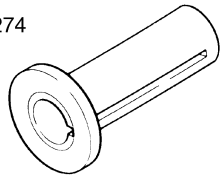 YU-90058/YU-90059 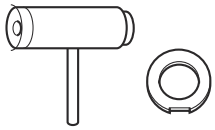	5-42
Crankshaft installer bolt 90890-01275 Bolt YU-90060	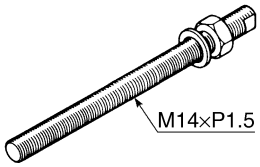	5-42
Adapter (M12) 90890-01278 Adapter #3 YU-90063	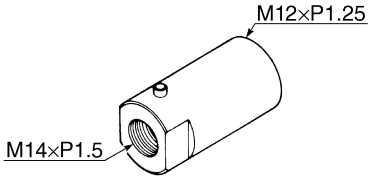	5-42
Radiator cap tester 90890-01325 Mityvac cooling system tester kit YU-24460-A	90890-01325 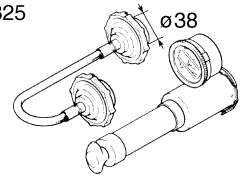 YU-24460-A 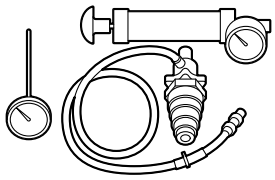	6-4, 6-4
Radiator cap tester adapter 90890-01352 Pressure tester adapter YU-33984	90890-01352 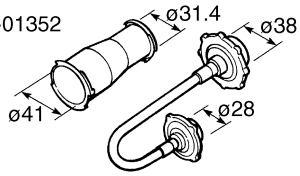 YU-33984 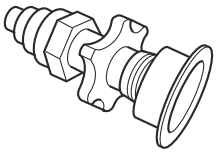	6-4, 6-4

Tool name/Tool No.	Illustration	Reference pages
Ignition checker 90890-06754 Oppama pet–4000 spark checker YM-34487	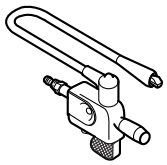	8-11

EAM20181

INSTRUMENT AND CONTROL FUNCTIONS

EAM30182

ENGINE STOP SWITCH

The engine stop switch “1” is located on the left handlebar. Continue pushing the engine stop switch till the engine comes to a stop.

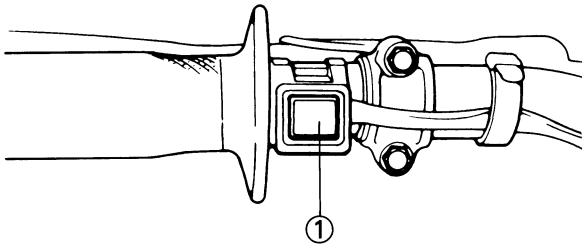

EAM30185

SHIFT PEDAL

The shift pedal “1” has adopted a method of 1 down & 4 ups (press-down & kick-ups).
Press it down for N (neutral) to 1st, and kick it up for 2nd to 5th.

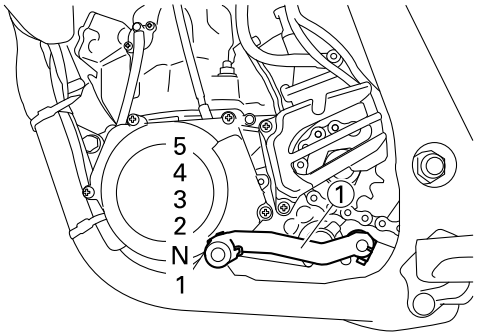

EAM30186

KICKSTARTER LEVER

Rotate the kickstarter lever “1” away from the engine. Push the starter down lightly with your foot until the gears engage, then kick smoothly and forcefully to start the engine. This model has a primary kickstarter lever so the engine can be started in any gear if the clutch is disengaged. In normal practices, however, shift to neutral before starting.

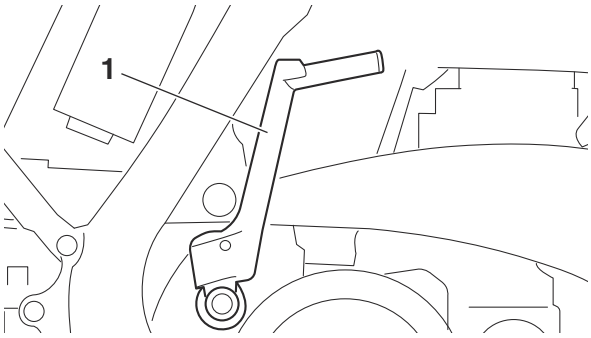

EAM30188

FRONT BRAKE LEVER

The front brake lever “1” is located on the right handlebar. Pull it toward the handlebar to activate the front brake.

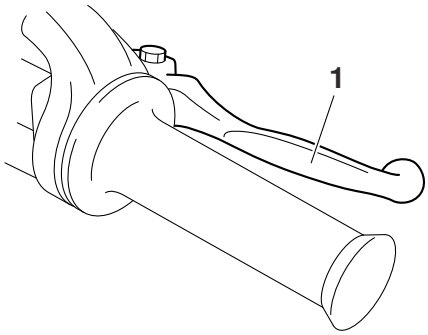

EAM30189

REAR BRAKE PEDAL

The rear brake pedal “1” is in the right of the chassis. Press down on the brake pedal to activate the rear brake.

EAM30619

FUEL COCK

The fuel cock supplies fuel from the tank to carburetor and also filters the fuel. The fuel cock has the two positions:
OFF:
With the lever in this position, fuel will not flow. Always return the lever to this position when the engine is not running.
ON:
With the lever in this position, fuel flows to the

carburetor. Normal riding is done with the lever in this position.

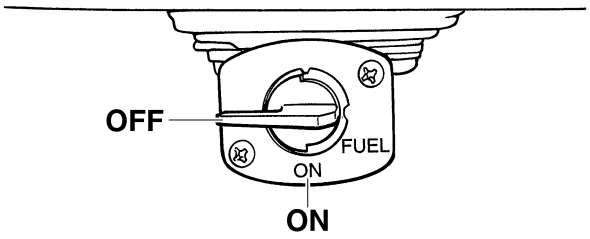

EAM30444

STARTER KNOB (CHOKE)

When cold, the engine requires a richer air-fuel mixture for starting. A separate starter circuit, which is controlled by the starter knob “1”, supplies this mixture. Pull the starter knob out to open the circuit for starting. When the engine has warmed up, push it in to close the circuit.

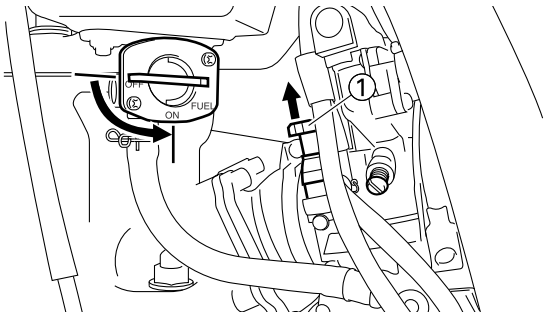

EAM20123

STARTING AND BREAK-IN

EAM30538

FUEL AND ENGINE MIXING OIL

Mix oil with the gas at the ratio specified below. Always use fresh, name-brand gasoline, and mix the oil and gas the day of the race. Do not use premix that is more than a few hours old.

Recommended fuel
Premium unleaded gasoline (E10 acceptable)

TIP

If knocking or pinging occurs, use a different brand of gasoline or higher octane grade.

ECA22260

NOTICE

Never mix two types of oil in the same batch; clotting of the oil could result. If you wish to change oil types, be sure to drain the fuel tank and the carburetor float bowl of old premix prior to filling with the new type.

Fuel tank capacity
7.0 L (1.8 US gal, 1.5 Imp.gal)

Engine oil
Lubrication system
Premix lubrication
Engine oil
YAMALUBE 2R
Premix ratio
30

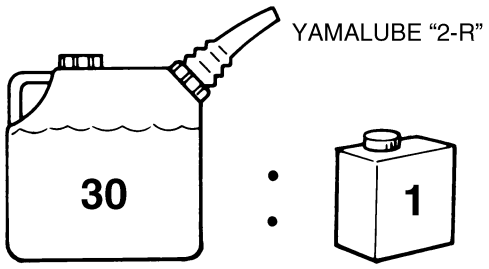

EAM30196

STARTING A COLD ENGINE

1. Shift the transmission into neutral.
2. Turn the fuel cock to “ON” and full open the starter knob (CHOKE).
3. With the throttle completely closed start the engine by kicking the kickstarter forcefully with firm stroke.
4. Run the engine at idle or slightly higher until it warms up: this usually takes about one or two minutes.
5. The engine is warmed up when it responds normally to the throttle with the starter knob (CHOKE) turned off.

EWA19030

WARNING

Since exhaust gas contains harmful ingredients, do not start or warm it up at an illventilated place or a closed narrow place.

6. To stop the engine, push the engine stop switch.

TIP

Continue pushing the engine stop switch till the engine comes to a full stop.

EAM30197

STARTING A WARM ENGINE

Do not operate the starter knob (CHOKE). Open the throttle slightly and start the engine by kicking the kickstarter forcefully with firm stroke.

EAM30198

BREAK-IN PROCEDURES

A break-in is important so that rotating portion, sliding surfaces, and mounted areas may fit one another, and that the rider may become accustomed to the machine.

ECA25811

NOTICE

Before running, do maintenance on the air filter element.

1. Before starting the engine, fill the fuel tank with a break-in oil-fuel mixture as follows.

Engine oil
YAMALUBE 2R
Premix ratio
15

2. Start and warm up the engine.
3. After warming up the engine, drive it for about 20 minutes at a throttle opening of 1/2 or less.
4. Make a pit stop, and check mounted areas for looseness, oil leaks, or other problems.
5. Then, drive it for about 40 minutes at a throttle opening of 3/4 or less.
6. Make a pit stop again, and thoroughly check mounted areas for looseness, oil leaks, or other problems. Thorough checks and adjustments are required in particular for stretch of cables, free play of the brake, stretch of the drive chain, looseness of the spoke, and so on.

ECA25821

NOTICE

After a break-in or after each race, always check the points shown in "TORQUE-CHECK POINTS" for tightening torques and retighten them.
Also when the following parts are replaced, a break-in is required.

- **Cylinder and Crankshaft: A break-in is required for about an hour.**
- **Piston, Piston ring, Valve, Camshaft, and Gear: A break-in is required for about 30 minutes at a throttle opening of 1/2 or less.**

Observe the condition of the engine carefully during a break-in.
For checkpoints for a break-in, see "MAINTENANCE AFTER BREAK-IN". If any problem is found, immediately stop the engine and make a checkup.

EAM20124

MAINTENANCE AFTER BREAK-IN

After a break-in, perform careful maintenance to get ready for the next practice or race.
Refer to “PRE-OPERATION INSPECTION AND MAINTENANCE” on page 3-5.

EAM30199

MAJOR MAINTENANCE

1. For the engine
   - Leaks around the engine
     Check for pressure leaks from the cylinder head or the cylinder, oil leaks from the crankcase or the case cover, leaks from the coolant system, and other leaks.
   - Check that the cylinder, the piston, and the piston ring fit one another, and that contact between the cylinder and the piston are correct.
   - Transmission oil change
     Drain the oil, and check for dirt and foreign materials such as metal chips. (If any foreign material is mixed, disassemble and check the transmission.)
     Pour the specified amount of the recommended oil.
   - Carburetor
     Disassemble the carburetor and clean the small holes, blowing them with compressed air.
   - CDI magneto
     Check for looseness in mounted areas of the rotor and the stator.
     Check that the connector is not being disconnected.
   - Silencer
     Check the main body and stay for cracks.
     Check for leaks.
   - Mounting bolts and nuts
     Check for looseness in mounted areas of parts, as well as engine mounting bolts and engine brackets.
2. For the chassis
   - Check welds and mounted areas of the frame, the swingarm, the link, the bracket, and so on, for looseness and cracks.
   - Wheel(s)
     Check the wheel for runout. Check the spoke for looseness.
   - Brake(s)
     Check the brake disc mounting bolt for looseness.
     Check that the reservoir contains the specified amount of brake fluid. Check for leaks.
   - Cable
     Grease and adjust cables.
   - Drive chain
     Lubricate the drive chain and adjust its tension.
   - Fuel tank
     Clean the inside of the fuel tank and the fuel cock. Check for leaks.
   - Suspension
     Check for oil leaks in the front fork or the rear shock absorber. Check that the mounted conditions are good.
   - Sprocket
     Check for looseness in the sprocket mounted on the rear wheel.
   - Mounting bolts and nuts
     Check mounted areas for looseness.

ECA25831

NOTICE

After a break-in or before each race, always check the points shown in “TORQUE-CHECK POINTS” for tightening torques and retighten them.

- Greasing and oiling
  Always grease or oil the specified points.

EAM30195

AIR FILTER MAINTENANCE

Apply the Yamaha foam air filter oil or other quality foam air filter oil to the element. (Excess oil in the element may adversely affect engine starting.)
Refer to “CLEANING THE AIR FILTER ELEMENT” on page 3-9.

EAM20125

TORQUE-CHECK POINTS

Frame construction		Combined seat and fuel tank		Fuel tank to frame
				Frame to rear frame
Engine mounting				Frame to engine
				Engine bracket to engine
				Engine bracket to frame
Seat				Seat to frame
Steering		Steering stem to handlebar		Steering stem to frame
				Steering stem to upper bracket
				Upper bracket to handlebar
Suspension	Front	Steering stem to front fork		Front fork to upper bracket
				Front fork to lower bracket
	Rear	Link		Assembly of links
				Link to frame
				Link to rear shock absorber
				Link to swingarm
		Mounting of rear shock absorber		Rear shock absorber and frame
		Mounting of swingarm		Tightening of pivot shaft
Wheel(s)		Mounting of wheel	Front	Tightening of wheel axle
				Tightening of axle holder
				Tightening of spoke nipple
			Rear	Tightening of wheel axle
				Wheel to rear wheel sprocket
				Tightening of spoke nipple
Brake(s)			Front	Brake caliper to front fork
				Brake disc to wheel
				Tightening of union bolt
				Brake master cylinder to handlebar
				Tightening of bleed screw
				Tightening of brake hose holder
			Rear	Brake pedal to frame
				Brake disc to wheel
				Tightening of union bolt
				Brake master cylinder to frame
				Tightening of bleed screw
				Tightening of brake hose holder
Shift pedal				Shift pedal to shift shaft

Plastic cover	Tightening of front fender
	Tightening of fork leg protector
	Tightening of air scoop
	Left cover to rear frame
	Tightening of side cover
	Tightening of rear fender
	Tightening of mud flap
	Tightening of rear brake disc cover
	Tightening of rear brake caliper cover

TIP

Concerning the tightening torque, refer to “TIGHTENING TORQUES” on page 2-9.

EAM20126

MOTORCYCLE CARE AND STORAGE

EAM30200

CARE

While the open design of a motorcycle reveals the attractiveness of the technology, it also makes it more vulnerable. Rust and corrosion can develop even if high-quality components are used. A rusty exhaust pipe may go unnoticed on a car, however, it detracts from the overall appearance of a motorcycle. Frequent and proper care does not only comply with the terms of the warranty, but it will also keep your motorcycle looking good, extend its life and optimize its performance.

Before cleaning

TIP

Be sure to confirm that the vehicle is completely cooled.

1. Block or cover the following parts with suitable measures.
   - Side cover air intake port “1”
   - Water pump housing hole at the bottom “2”
   - Crankcase cover hole at the bottom (left side) “3”
   - Silencer exhaust port “4”
   - End of each hose

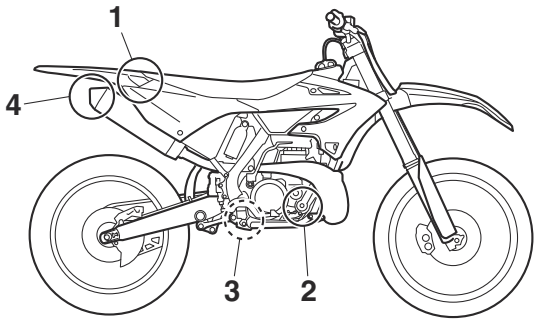

2. Make sure that all caps and covers as well as all electrical couplers and connectors, including the spark plug cap, are tightly installed.
3. Remove extremely stubborn dirt, like oil burnt onto the crankcase, with a degreasing agent and a brush, but never apply such products onto seals, gaskets, sprockets, the drive chain and wheel axles. Always rinse the dirt and degreaser off with water.

Cleaning

ECA26730

NOTICE

- **Avoid using strong acidic wheel cleaners, especially on spoked wheels. If such products are used on hard-to-remove dirt, do not leave the cleaner on the affected area any longer than instructed. Also, thoroughly rinse the area off with water, immediately dry it, and then apply a corrosion protection spray.**
- **Improper cleaning can damage plastic parts (such as cowlings, panels, windshields, headlight lenses, meter lenses, etc.) and the mufflers. Use only a soft, clean cloth or sponge with water to clean plastic. However, if the plastic parts cannot be thoroughly cleaned with water, diluted mild detergent with water may be used. Be sure to rinse off any detergent residue using plenty of water, as it is harmful to plastic parts.**
- **Do not use any harsh chemical products on plastic parts. Be sure to avoid using cloths or sponges which have been in contact with strong or abrasive cleaning products, solvent or thinner, fuel (gasoline), rust removers or inhibitors, brake fluid, antifreeze or electrolyte.**
- **For motorcycles equipped with a windshield: Do not use strong cleaners or hard sponges as they will cause dulling or scratching. Some cleaning compounds for plastic may leave scratches on the windshield. Test the product on a small hidden part of the windshield to make sure that it does not leave any marks. If the windshield is scratched, use a quality plastic polishing compound after washing.**
- **When cleaning using either a high-pressure cleaning machine or a water hose, do not direct the water jet toward the following areas:(Otherwise, it could cause either damage due to the water pressure or malfunction due to water entry.)**
  Wheels or swing arm bearings
  Fork seals or brake seals
  Electrical parts, such as couplers, switches, battery, etc.
  Muffler or hoses
  Air cleaner intake port
- **Do not clean using a water jet with the seat or cover removed.**

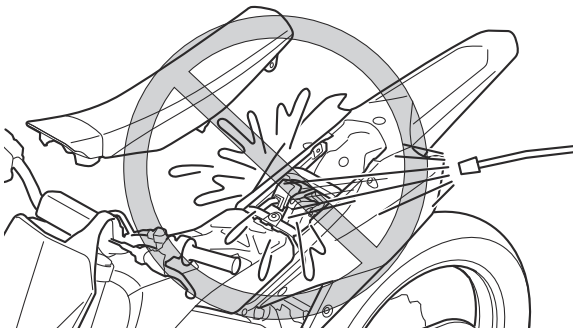

After normal use

Remove dirt with warm water, a mild detergent, and a soft, clean sponge, and then rinse thoroughly with clean water. Use a toothbrush or bottlebrush for hard-to-reach areas. Stubborn dirt and insects will come off more easily if the area is covered with a wet cloth for a few minutes before cleaning.

After riding in the rain, near the sea or on salt-sprayed roads

Since sea salt or salt sprayed on roads during winter are extremely corrosive in combination with water, carry out the following steps after each ride in the rain, near the sea or on salt-sprayed roads.

TIP

Salt sprayed on roads in the winter may remain well into spring.

1. Clean the motorcycle with cold water and a mild detergent, after the engine has cooled down.
   NOTICE: **Do not use warm water since it increases the corrosive action of the salt.**
2. Apply a corrosion protection spray on all metal, including chrome- and nickel-plated, surfaces to prevent corrosion.

After cleaning

1. Dry the motorcycle with a chamois or an absorbing cloth.
2. Immediately dry the drive chain and lubricate it to prevent it from rusting.
3. Use a chrome polish to shine chrome, aluminum and stainless- steel parts, including the exhaust system. (Even the thermally induced discoloring of stainless- steel exhaust systems can be removed through polishing.)
4. To prevent corrosion, it is recommended to apply a corrosion protection spray on all metal, including chrome- and nickel-plated, surfaces.
5. Use spray oil as a universal cleaner to remove any remaining dirt.
6. Touch up minor paint damage caused by stones, etc.
7. Wax all painted surfaces.
8. Let the motorcycle dry completely before storing or covering it.

EWA19050

WARNING

Contaminants on the brakes or tires can cause loss of control.

- **Make sure that there is no oil or wax on the brakes or tires.**
- **If necessary, clean the brake discs and brake linings with a regular brake disc cleaner or acetone, and wash the tires with warm water and a mild detergent. Before riding at higher speeds, test the motorcycle's braking performance and cornering behavior.**

ECA24240

NOTICE

- **Apply spray oil and wax sparingly and make sure to wipe off any excess.**
- **Never apply oil or wax to any rubber and plastic parts, but treat them with a suitable care product.**
- **Avoid using abrasive polishing compounds as they will wear away the paint.**

TIP

- Consult a Yamaha dealer for advice on what products to use.
- Washing, rainy weather or humid climates can cause the headlight lens to fog. Turning the headlight on for a short period of time will help remove the moisture from the lens.

EAM30201

STORAGE

Short-term

Always store your motorcycle in a cool, dry place and, if necessary, protect it against dust with a porous cover. Be sure the engine and the exhaust system are cool before covering the motorcycle.

ECA24250

NOTICE

- **Storing the motorcycle in a poorly ventilated room or covering it with a tarp, while it is still wet, will allow water and humidity to seep in and cause rust.**
- **To prevent corrosion, avoid damp cellars, stables (because of the presence of ammonia) and areas where strong chemicals are**

stored.

Long-term

Before storing your motorcycle for several months:

1. Follow all the instructions in “CARE” on page 1-26.
2. Drain the fuel tank, fuel lines, and the carburetor float bowl.
3. Perform the following steps to protect the cylinder, piston rings, etc. from corrosion.
   a. Remove the spark plug, pour a tablespoon of motor oil in the spark plug hole, and reinstall the plug. With the engine stop switch pushed in, kick the engine over several times to coat the cylinder walls with oil.
4. Lubricate all control cables and the pivoting points of all levers and pedals as well as of the sidestand.
5. Check and, if necessary, correct the tire air pressure, and then lift the motorcycle so that both of its wheels are off the ground. Alternatively, turn the wheels a little every month in order to prevent the tires from becoming degraded in one spot.
6. Cover the muffler outlet with a plastic bag to prevent moisture from entering it.

TIP

Make any necessary repairs before storing the motorcycle.

SPECIFICATIONS

GENERAL SPECIFICATIONS.....2-1

ENGINE SPECIFICATIONS.....2-2

CHASSIS SPECIFICATIONS.....2-5

ELECTRICAL SPECIFICATIONS.....2-8

TIGHTENING TORQUES.....2-9
GENERAL TIGHTENING TORQUE SPECIFICATIONS.....2-9
ENGINE TIGHTENING TORQUES.....2-10
CHASSIS TIGHTENING TORQUES.....2-12

CABLE ROUTING DIAGRAM.....2-15

EAM20127

GENERAL SPECIFICATIONS

Model	
Model	D691 D695
Dimensions	
Overall length	2185 mm (86.0 in)
Overall width	825 mm (32.5 in)
Overall height	1290 mm (50.8 in)
Seat height	975 mm (38.4 in)
Wheelbase	1485 mm (58.5 in)
Ground clearance	360 mm (14.17 in)
Weight	
Curb weight	103 kg (227 lb)
Riding capacity	1 person

EAM20128

ENGINE SPECIFICATIONS

Engine	
Combustion cycle	2-stroke
Cooling system	Liquid cooled
Induction system	Reed valve
Displacement	249 cm^3
Number of cylinders	Single cylinder
Bore × stroke	66.4 × 72.0 mm (2.61 × 2.83 in)
Compression ratio	8.9–10.6 : 1
Starting system	Kickstarter
Fuel	
Recommended fuel	Premium unleaded gasoline (E10 acceptable)
Fuel tank capacity	7.0 L (1.8 US gal, 1.5 Imp.gal)
Engine oil	
Recommended brand	YAMALUBE
Lubrication system	Premix lubrication
Engine oil	YAMALUBE 2R
Premix ratio	30
Transmission oil	
Type	Motor oil SAE 10W-40 type SG or higher
Quantity (disassembled)	0.80 L (0.85 US qt, 0.70 Imp.qt)
Quantity	0.75 L (0.79 US qt, 0.66 Imp.qt)
Cooling system	
Coolant quantity	
Radiator (including all routes)	1.18 L (1.25 US qt, 1.04 Imp.qt)
Radiator cap valve opening pressure	107.9–137.3 kPa (1.08–1.37 kgf/cm^2, 15.6–19.9 psi)
Spark plug(s)	
Manufacturer/model	NGK/BR8EG
Spark plug gap	0.5–0.6 mm (0.020–0.024 in)
Cylinder head	
Warpage limit	0.03 mm (0.0012 in)
Cylinder	
Bore	66.400–66.414 mm (2.6142–2.6147 in)
Wear limit	66.464 mm (2.6167 in)
Piston	
Piston-to-cylinder clearance	0.045–0.050 mm (0.0018–0.0020 in)
Diameter	66.352–66.367 mm (2.6123–2.6129 in)
Measuring point (from piston skirt bottom)	17.5 mm (0.69 in)
Piston pin bore inside diameter limit	18.040 mm (0.7102 in)
Piston pin outside diameter limit	17.975 mm (0.7077 in)
Piston-pin-to-piston-pin-bore clearance	0.004–0.020 mm (0.0002–0.0008 in)
Piston ring	
Top ring	
End gap limit	0.95 mm (0.0374 in)
Ring side clearance	0.030–0.065 mm (0.0012–0.0026 in)
Side clearance limit	0.100 mm (0.0039 in)

2nd ring	
End gap limit	0.95 mm (0.0374 in)
Ring side clearance	0.030–0.065 mm (0.0012–0.0026 in)
Side clearance limit	0.100 mm (0.0039 in)
Crankshaft	
Crank assembly width	59.95–60.00 mm (2.360–2.362 in)
Runout limit	0.050 mm (0.0020 in)
Clutch	
Clutch type	Wet, multiple-disc
Clutch lever free play	7.0–12.0 mm (0.28–0.47 in)
Friction plate thickness	2.90–3.10 mm (0.114–0.122 in)
Wear limit	2.80 mm (0.110 in)
Plate quantity	8 pcs
Clutch plate thickness	1.50–1.70 mm (0.059–0.067 in)
Plate quantity	7 pcs
Warpage limit	0.20 mm (0.008 in)
Clutch spring free length	50.00 mm (1.97 in)
Clutch spring free length limit	48.00 mm (1.89 in)
Push rod bending limit	0.30 mm (0.012 in)
Drivetrain	
Primary reduction ratio	3.000 (63/21)
Transmission type	Constant mesh 5-speed
Gear ratio	
1st	1.929 (27/14)
2nd	1.533 (23/15)
3rd	1.278 (23/18)
4th	1.091 (24/22)
5th	0.952 (20/21)
Main axle runout limit	0.01 mm (0.0004 in)
Drive axle runout limit	0.01 mm (0.0004 in)
Secondary reduction ratio	3.571 (50/14)
Final drive	Chain
Air filter	
Air filter element	Wet element
Air filter oil grade	Yamaha foam air filter oil or other quality foam air filter oil
Carburetor	
Type × quantity	PWK38 × 1
ID mark	1P87 54
Main jet	#178
Main air jet	#200
Jet needle	N3-EW-2
Needle jet	2.9 (#6)
Cutaway	#7
Pilot outlet	0.8
Pilot jet	#50
Bypass 1	1.5
Air screw turns out	1-1/4
Valve seat size	3.8
Starter jet 1	#85

Power Jet	#50
Float height	6.5 mm (0.26 in)
Throttle grip free play	3.0–5.0 mm (0.12–0.20 in)
Reed valve	
Thickness	0.420 mm (0.0165 in)
Valve stopper height	10.3–10.7 mm (0.41–0.42 in)
Valve bending limit	0.2 mm (0.01 in)

EAM20129

CHASSIS SPECIFICATIONS

Chassis	
Caster angle	27.7 °
Trail	122 mm (4.8 in)
Front wheel	
Wheel type	Spoke wheel
Rim size	21 x 1.60
Radial wheel runout limit	2.0 mm (0.08 in)
Lateral wheel runout limit	2.0 mm (0.08 in)
Wheel axle bending limit	0.50 mm (0.02 in)
Rear wheel	
Wheel type	Spoke wheel
Rim size	19 x 2.15
Radial wheel runout limit	2.0 mm (0.08 in)
Lateral wheel runout limit	2.0 mm (0.08 in)
Wheel axle bending limit	0.50 mm (0.02 in)
Front tire	
Type	With tube
Size	80/100-21 51M
Manufacturer/model	DUNLOP/MX33F
Rear tire	
Type	With tube
Size	110/90-19 62M
Manufacturer/model	DUNLOP/MX33
Tire air pressure (measured on cold tires)	
Front	100 kPa (1.00 kgf/cm^2, 15 psi)
Rear	100 kPa (1.00 kgf/cm^2, 15 psi)
Front brake	
Type	Hydraulic single disc brake
Brake disc thickness limit	2.5 mm (0.10 in)
Brake disc runout limit (as measured on wheel)	0.15 mm (0.0059 in)
Brake pad lining thickness limit	1.0 mm (0.04 in)
Master cylinder inside diameter	9.52 mm (0.37 in)
Caliper cylinder inside diameter (Left)	25.40 mm, 25.40 mm (1.00 in, 1.00 in)
Specified brake fluid	DOT 4
Rear brake	
Type	Hydraulic single disc brake
Brake disc thickness limit	3.5 mm (0.14 in)
Brake disc runout limit (as measured on wheel)	0.15 mm (0.0059 in)
Brake pad lining thickness limit	1.0 mm (0.04 in)
Master cylinder inside diameter	11.0 mm (0.43 in)
Caliper cylinder inside diameter	25.40 mm (1.00 in)
Specified brake fluid	DOT 4
Front suspension	
Type	Telescopic fork
Spring	Coil spring

Shock absorber	Hydraulic damper
Wheel travel	300 mm (11.8 in)
Fork spring free length limit	492.0 mm (19.37 in)
Inner tube bending limit	0.2 mm (0.01 in)
Recommended oil	Yamaha Suspension Oil S1
Quantity (left)	505.0 cm^3 (17.07 US oz, 17.81 Imp.oz)
Quantity (right)	505.0 cm^3 (17.07 US oz, 17.81 Imp.oz)
Rebound damping	
Adjusting system	Mechanical adjustable type
Unit for adjustment	Click
Adjustment value from the start position (Soft)	20
Adjustment value from the start position (STD)	14
Adjustment value from the start position (Hard)	0
Compression damping	
Adjusting system	Mechanical adjustable type
Unit for compression damping adjustment	Click
Adjustment value from the start position (Soft)	20
Adjustment value from the start position (STD)	9
Adjustment value from the start position (Hard)	0

Rear suspension

Type	Swingarm (link suspension)
Spring	Coil spring
Shock absorber	Gas-hydraulic damper
Wheel travel	315 mm (12.4 in)
Spring preload	
Adjusting system	Mechanical adjustable type
Adjustment value (Soft)	1.5 mm (0.06 in)
Adjustment value (STD)	7.0 mm (0.28 in)
Adjustment value (Hard)	20.5 mm (0.81 in)
Rebound damping	
Adjusting system	Mechanical adjustable type
Unit for adjustment	Click
Adjustment value from the start position (Soft)	20
Adjustment value from the start position (STD)	8
Adjustment value from the start position (Hard)	0
Compression damping	
Adjusting system	Mechanical adjustable type
Fast compression damping	
Unit for adjustment	Turn
Adjustment value from the start position (Soft)	2
Adjustment value from the start position (STD)	1-1/8

Adjustment value from the start position (Hard)	0
Slow compression damping	
Unit for adjustment	Click
Adjustment value from the start position (Soft)	20
Adjustment value from the start position (STD)	9
Adjustment value from the start position (Hard)	0
Drive chain	
Size	520
Chain type	Non-sealed type
Number of links	114
Drive chain slack (Maintenance Stand)	48.0–58.0 mm (1.89–2.28 in)
15-link length limit	242.9 mm (9.56 in)

EAM20130

ELECTRICAL SPECIFICATIONS

Ignition system	
Ignition system	CDI
Ignition timing (B.T.D.C.)	0.18 mm (0.01 in)
Pickup coil resistance	248.0–372.0 Ω
Charging coil 1 resistance	720.0–1080.0 Ω
Charging coil 2 resistance	44.0–66.0 Ω
Ignition coil	
Secondary coil resistance	9.52–14.28 kΩ
Spark plug cap	
Resistance	5.00 kΩ
Charging system	
Charging system	CDI magneto

EAM20131

TIGHTENING TORQUES

EAM30205

GENERAL TIGHTENING TORQUE SPECIFICATIONS

This chart specifies tightening torques for standard fasteners with a standard ISO thread pitch. Tightening torque specifications for special components or assemblies are provided for each chapter of this manual. To avoid warpage, tighten multi-fastener assemblies in a crisscross pattern and progressive stages until the specified tightening torque is reached. Unless otherwise specified, tightening torque specifications require clean, dry threads. Components should be at room temperature.

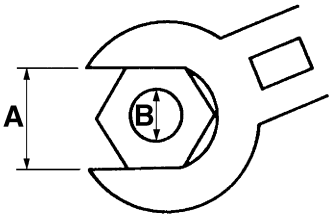

A. Distance between flats
B. Outside thread diameter

A (nut)	B (bolt)	General tightening torques		
		N·m	kgf·m	lb·ft
10 mm	6 mm	6	0.6	4.4
12 mm	8 mm	15	1.5	11
14 mm	10 mm	30	3.0	22
17 mm	12 mm	55	5.5	41
19 mm	14 mm	85	8.5	63
22 mm	16 mm	130	13.0	96

EAM30203

ENGINE TIGHTENING TORQUES

TIP

△- marked portion shall be checked for torque tightening after break-in or before each race.

Item	Thread size	Q'ty	Tightening torques	Remarks
Spark plug	M14S	1	20 N·m (2.0 kgf·m, 15 lb·ft)	
Cylinder head nut	M8	6	25 N·m (2.5 kgf·m, 18 lb·ft)	
Cylinder head stud bolt	M8	6	13 N·m (1.3 kgf·m, 9.6 lb·ft)	
Cylinder nut	M10	4	42 N·m (4.2 kgf·m, 31 lb·ft)	
Cylinder stud bolt	M10	4	13 N·m (1.3 kgf·m, 9.6 lb·ft)	
Power valve holder 2	M5	2	6 N·m (0.6 kgf·m, 4.4 lb·ft)	
Link rod screw	M5	2	6 N·m (0.6 kgf·m, 4.4 lb·ft)	
Push rod bolt	M5	1	4.5 N·m (0.45 kgf·m, 3.3 lb·ft)	
Thrust plate screw	M5	1	6 N·m (0.6 kgf·m, 4.4 lb·ft)	
Side holder screw	M5	4	4.0 N·m (0.40 kgf·m, 3.0 lb·ft)	
Power valve link lever bolt	M4	1	4.0 N·m (0.40 kgf·m, 3.0 lb·ft)	
Pulley bolt	M4	2	4.0 N·m (0.40 kgf·m, 3.0 lb·ft)	
Power valve cover screw	M5	4	4.0 N·m (0.40 kgf·m, 3.0 lb·ft)	
Governor fork screw	M4	2	5 N·m (0.5 kgf·m, 3.7 lb·ft)	
Power valve housing bolt	M5	4	4.5 N·m (0.45 kgf·m, 3.3 lb·ft)	
Impeller	M8	1	14 N·m (1.4 kgf·m, 10 lb·ft)	
Water pump housing cover bolt	M6	4	10 N·m (1.0 kgf·m, 7.4 lb·ft)	
Coolant drain bolt	M6	1	10 N·m (1.0 kgf·m, 7.4 lb·ft)	
Radiator bolt	M6	4	10 N·m (1.0 kgf·m, 7.4 lb·ft)	
Radiator guard bolt	M6	2	10 N·m (1.0 kgf·m, 7.4 lb·ft)	
Radiator hose clamp	M6	8	1.5 N·m (0.15 kgf·m, 1.1 lb·ft)	
Air filter element	M6	1	2.0 N·m (0.20 kgf·m, 1.5 lb·ft)	
Carburetor joint bolt	M6	5	10 N·m (1.0 kgf·m, 7.4 lb·ft)	
Air filter case bolt	M6	2	8 N·m (0.8 kgf·m, 5.9 lb·ft)	△
Air filter guide clamp	M5	1	3.5 N·m (0.35 kgf·m, 2.6 lb·ft)	
Reed valve screw	M3	4	1.0 N·m (0.10 kgf·m, 0.73 lb·ft)	
Locknut (throttle cable handlebar side)	M8	1	7 N·m (0.7 kgf·m, 5.2 lb·ft)	
Locknut (throttle cable carburetor side)	M6	1	4.0 N·m (0.40 kgf·m, 3.0 lb·ft)	
Exhaust pipe bolt (front)	M6	1	14 N·m (1.4 kgf·m, 10 lb·ft)	△
Exhaust pipe bolt (rear)	M6	1	12 N·m (1.2 kgf·m, 8.9 lb·ft)	△
Exhaust pipe stay bolt (front)	M8	1	25 N·m (2.5 kgf·m, 18 lb·ft)	△

Item	Thread size	Q'ty	Tightening torques	Remarks
Exhaust pipe stay bolt (rear)	M6	1	12 N·m (1.2 kgf·m, 8.9 lb·ft)	△
Silencer bolt	M6	2	12 N·m (1.2 kgf·m, 8.9 lb·ft)	△/LT
Fiber bolt	M6	4	10 N·m (1.0 kgf·m, 7.4 lb·ft)	LT
Crankcase bolt	M6	11	14 N·m (1.4 kgf·m, 10 lb·ft)	
Crankcase cover screw (left)	M6	5	5 N·m (0.5 kgf·m, 3.7 lb·ft)	
Drive sprocket cover screw	M6	2	5 N·m (0.5 kgf·m, 3.7 lb·ft)	
Crankcase cover screw (right)	M6	9	10 N·m (1.0 kgf·m, 7.4 lb·ft)	
Bearing plate cover screw (drive axle left)	M6	2	10 N·m (1.0 kgf·m, 7.4 lb·ft)	LT
Bearing plate cover bolt (main axle right)	M6	2	10 N·m (1.0 kgf·m, 7.4 lb·ft)	LT
Holder bolt	M6	2	10 N·m (1.0 kgf·m, 7.4 lb·ft)	LT
Oil drain bolt	M12	1	23 N·m (2.3 kgf·m, 17 lb·ft)	
Oil check bolt	M6	1	10 N·m (1.0 kgf·m, 7.4 lb·ft)	
Neutral switch lead holder bolt	M6	1	10 N·m (1.0 kgf·m, 7.4 lb·ft)	
Kickstarter lever	M8	1	30 N·m (3.0 kgf·m, 22 lb·ft)	
Ratchet wheel stopper bolt	M6	2	10 N·m (1.0 kgf·m, 7.4 lb·ft)	
Clutch cover bolt	M6	6	10 N·m (1.0 kgf·m, 7.4 lb·ft)	
Primary drive gear bolt	M10	1	55 N·m (5.5 kgf·m, 41 lb·ft)	△/G
Clutch boss nut	M20	1	75 N·m (7.5 kgf·m, 55 lb·ft)	Use a Lock washer.
Clutch spring bolt	M6	6	10 N·m (1.0 kgf·m, 7.4 lb·ft)	
Locknut (clutch cable side)	M6	1	4.3 N·m (0.43 kgf·m, 3.2 lb·ft)	
Push lever shaft bolt	M5	1	6 N·m (0.6 kgf·m, 4.4 lb·ft)	
Drive sprocket nut	M20	1	75 N·m (7.5 kgf·m, 55 lb·ft)	Use a Lock washer.
Shift guide bolt	M6	2	10 N·m (1.0 kgf·m, 7.4 lb·ft)	LT
Stopper lever bolt	M6	1	10 N·m (1.0 kgf·m, 7.4 lb·ft)	LT
Tension spring (shift shaft) stopper bolt	M8	1	22 N·m (2.2 kgf·m, 16 lb·ft)	
Segment bolt	M8	1	30 N·m (3.0 kgf·m, 22 lb·ft)	
Bearing plate cover screw (shift drum right)	M6	2	10 N·m (1.0 kgf·m, 7.4 lb·ft)	LT
Shift pedal bolt	M6	1	12 N·m (1.2 kgf·m, 8.9 lb·ft)	
Stator coil screw	M6	3	7 N·m (0.7 kgf·m, 5.2 lb·ft)	
CDI magneto rotor nut	M12	1	56 N·m (5.6 kgf·m, 41 lb·ft)	
Ignition coil bolt	M6	2	7 N·m (0.7 kgf·m, 5.2 lb·ft)	

Item	Thread size	Q'ty	Tightening torques	Remarks
Neutral switch screw	M5	2	4.0 N·m (0.40 kgf·m, 3.0 lb·ft)	LT

EAM30204

CHASSIS TIGHTENING TORQUES

TIP

△- marked portion shall be checked for torque tightening after break-in or before each race.

Item	Thread size	Q'ty	Tightening torques	Remarks
Upper bracket pinch bolt	M8	4	21 N·m (2.1 kgf·m, 15 lb·ft)	△
Lower bracket pinch bolt	M8	4	21 N·m (2.1 kgf·m, 15 lb·ft)	△
Steering stem nut	M24	1	145 N·m (14.5 kgf·m, 107 lb·ft)	△
Upper handlebar holder bolt	M8	4	28 N·m (2.8 kgf·m, 21 lb·ft)	△
Lower handlebar holder nut	M12	2	40 N·m (4.0 kgf·m, 30 lb·ft)	△
Steering ring nut	M28	1	Refer to TIP.	△
Damper assembly (front fork)	M51	2	30 N·m (3.0 kgf·m, 22 lb·ft)	
Inner tube and adjuster	M22	2	55 N·m (5.5 kgf·m, 41 lb·ft)	LT
Base valve (front fork)	M42	2	28 N·m (2.8 kgf·m, 21 lb·ft)	
Adjuster (damper assembly)	M12	2	29 N·m (2.9 kgf·m, 21 lb·ft)	
Bleed screw (front fork)	M5	2	1.3 N·m (0.13 kgf·m, 0.95 lb·ft)	
Screw (adjuster knob)	M4	2	0.6 N·m (0.06 kgf·m, 0.44 lb·ft)	
Front fork protector bolt	M6	6	5 N·m (0.5 kgf·m, 3.7 lb·ft)	△
Front brake hose holder bolt	M6	2	9 N·m (0.9 kgf·m, 6.6 lb·ft)	△
Throttle cable cap screw	M4	2	0.5 N·m (0.05 kgf·m, 0.37 lb·ft)	
Grip cap bolt	M6	2	3.8 N·m (0.38 kgf·m, 2.8 lb·ft)	
Clutch lever pivot bolt	M6	1	3.0 N·m (0.30 kgf·m, 2.2 lb·ft)	
Clutch lever pivot nut	M6	1	7 N·m (0.7 kgf·m, 5.2 lb·ft)	
Clutch lever holder bolt	M6	2	5 N·m (0.5 kgf·m, 3.7 lb·ft)	
Locknut (clutch lever position)	M5	1	4.8 N·m (0.48 kgf·m, 3.5 lb·ft)	
Engine stop switch screw	M3	1	0.5 N·m (0.05 kgf·m, 0.37 lb·ft)	
Front brake master cylinder holder bolt	M6	2	9 N·m (0.9 kgf·m, 6.6 lb·ft)	△
Front brake master cylinder reservoir cap screw	M4	2	1.5 N·m (0.15 kgf·m, 1.1 lb·ft)	
Front brake lever pivot bolt	M6	1	6 N·m (0.6 kgf·m, 4.4 lb·ft)	
Front brake lever pivot nut	M6	1	6 N·m (0.6 kgf·m, 4.4 lb·ft)	
Locknut (front brake lever position)	M6	1	5 N·m (0.5 kgf·m, 3.7 lb·ft)	
Cable guide screw	M6	1	3.8 N·m (0.38 kgf·m, 2.8 lb·ft)	△
Front brake hose union bolt	M10	2	30 N·m (3.0 kgf·m, 22 lb·ft)	△

Item	Thread size	Q'ty	Tightening torques	Remarks
Front brake caliper bolt	M8	2	28 N·m (2.8 kgf·m, 21 lb·ft)	△
Brake pad pin plug	M10	2	2.5 N·m (0.25 kgf·m, 1.8 lb·ft)	
Brake pad pin	M10	2	17 N·m (1.7 kgf·m, 13 lb·ft)	△
Brake caliper bleed screw	M8	2	6 N·m (0.6 kgf·m, 4.4 lb·ft)	△
Front wheel axle nut	M16	1	105 N·m (10.5 kgf·m, 77 lb·ft)	△
Front wheel axle pinch bolt	M8	4	21 N·m (2.1 kgf·m, 15 lb·ft)	△
Front brake disc bolt	M6	6	12 N·m (1.2 kgf·m, 8.9 lb·ft)	△/LT
Rear brake disc bolt	M6	6	12 N·m (1.2 kgf·m, 8.9 lb·ft)	△/LT
Footrest bracket bolt	M10	4	55 N·m (5.5 kgf·m, 41 lb·ft)	LT
Rear brake pedal bolt	M8	1	26 N·m (2.6 kgf·m, 19 lb·ft)	△
Rear brake pedal adjusting locknut	M6	1	6 N·m (0.6 kgf·m, 4.4 lb·ft)	
Rear brake master cylinder bolt	M6	2	10 N·m (1.0 kgf·m, 7.4 lb·ft)	△
Rear brake master cylinder reservoir cap bolt	M4	2	1.5 N·m (0.15 kgf·m, 1.1 lb·ft)	
Rear brake hose union bolt	M10	2	30 N·m (3.0 kgf·m, 22 lb·ft)	△
Rear wheel axle nut	M20	1	125 N·m (12.5 kgf·m, 92 lb·ft)	△
Rear wheel sprocket self-locking nut	M8	6	42 N·m (4.2 kgf·m, 31 lb·ft)	△
Nipple (spoke)	—	72	2.5 N·m (0.25 kgf·m, 1.8 lb·ft)	△
Rear brake disc cover bolt	M6	2	10 N·m (1.0 kgf·m, 7.4 lb·ft)	△
Rear brake caliper protector bolt	M6	2	7 N·m (0.7 kgf·m, 5.2 lb·ft)	△
Drive chain puller locknut	M8	2	19 N·m (1.9 kgf·m, 14 lb·ft)	
Engine bracket nut (upper side)	M8	2	34 N·m (3.4 kgf·m, 25 lb·ft)	△
Engine bracket nut (lower side)	M10	1	64 N·m (6.4 kgf·m, 47 lb·ft)	△
Engine mounting nut (front side)	M10	1	64 N·m (6.4 kgf·m, 47 lb·ft)	△
Engine mounting nut (lower side)	M10	1	64 N·m (6.4 kgf·m, 47 lb·ft)	△
Pivot shaft nut	M16	1	85 N·m (8.5 kgf·m, 63 lb·ft)	△
Relay arm nut (swingarm side)	M14	1	70 N·m (7.0 kgf·m, 52 lb·ft)	△
Connecting arm nut (relay arm side)	M14	1	80 N·m (8.0 kgf·m, 59 lb·ft)	△
Connecting arm nut (frame side)	M14	1	80 N·m (8.0 kgf·m, 59 lb·ft)	△
Rear shock absorber assembly upper nut	M10	1	56 N·m (5.6 kgf·m, 41 lb·ft)	△
Rear shock absorber assembly lower nut	M10	1	53 N·m (5.3 kgf·m, 39 lb·ft)	△
Rear frame bolt (upper)	M8	1	32 N·m (3.2 kgf·m, 24 lb·ft)	△
Rear frame bolt (lower)	M8	2	29 N·m (2.9 kgf·m, 21 lb·ft)	△
Brake hose holder screw	M5	4	3.5 N·m (0.35 kgf·m, 2.6 lb·ft)	△

Item	Thread size	Q'ty	Tightening torques	Remarks
Swingarm and patch screw	M4	4	2.0 N·m (0.20 kgf·m, 1.5 lb·ft)	
Drive chain tensioner bolt	M8	1	16 N·m (1.6 kgf·m, 12 lb·ft)	
Drive chain tensioner nut	M8	1	16 N·m (1.6 kgf·m, 12 lb·ft)	
Drive chain support bolt	M6	1	7 N·m (0.7 kgf·m, 5.2 lb·ft)	
Drive chain support nut	M6	2	7 N·m (0.7 kgf·m, 5.2 lb·ft)	
Drive chain guide bolt	M5	4	6 N·m (0.6 kgf·m, 4.4 lb·ft)	
Fuel tank bolt (boss)	M10	2	20 N·m (2.0 kgf·m, 15 lb·ft)	△/
Fuel tank bolt	M6	2	10 N·m (1.0 kgf·m, 7.4 lb·ft)	△
Fuel cock screw	M6	2	4.0 N·m (0.40 kgf·m, 3.0 lb·ft)	△
Fuel tank screw (seat set side)	M6	1	7 N·m (0.7 kgf·m, 5.2 lb·ft)	
Fuel tank bracket bolt	M6	4	7 N·m (0.7 kgf·m, 5.2 lb·ft)	
Seat bolt	M6	1	11 N·m (1.1 kgf·m, 8.1 lb·ft)	△
Side cover bolt (front side)	M6	2	7 N·m (0.7 kgf·m, 5.2 lb·ft)	△
Side cover bolt (rear side)	M6	2	9 N·m (0.9 kgf·m, 6.6 lb·ft)	△
Air scoop bolt (fuel tank)	M6	4	7 N·m (0.7 kgf·m, 5.2 lb·ft)	△
Air scoop bolt (radiator guard)	M6	2	7 N·m (0.7 kgf·m, 5.2 lb·ft)	△
Front fender bolt	M6	4	10 N·m (1.0 kgf·m, 7.4 lb·ft)	△
Rear fender bolt (front side)	M6	2	7 N·m (0.7 kgf·m, 5.2 lb·ft)	△
Rear fender bolt (rear side)	M6	2	12 N·m (1.2 kgf·m, 8.9 lb·ft)	△/
Screw (mud flap)	—	2	1.3 N·m (0.13 kgf·m, 0.95 lb·ft)	△
Number plate bolt	M6	1	7 N·m (0.7 kgf·m, 5.2 lb·ft)	△

TIP

Steering ring nut

1. First, tighten the steering ring nut approximately 38 N·m (3.8 kgf·m, 28 lb·ft) by using the steering nut wrench, then loosen the steering ring nut one turn.
2. Retighten the steering ring nut 7 N·m (0.7 kgf·m, 5.2 lb·ft).

EAM20152

CABLE ROUTING DIAGRAM

Frame and engine (left side view)

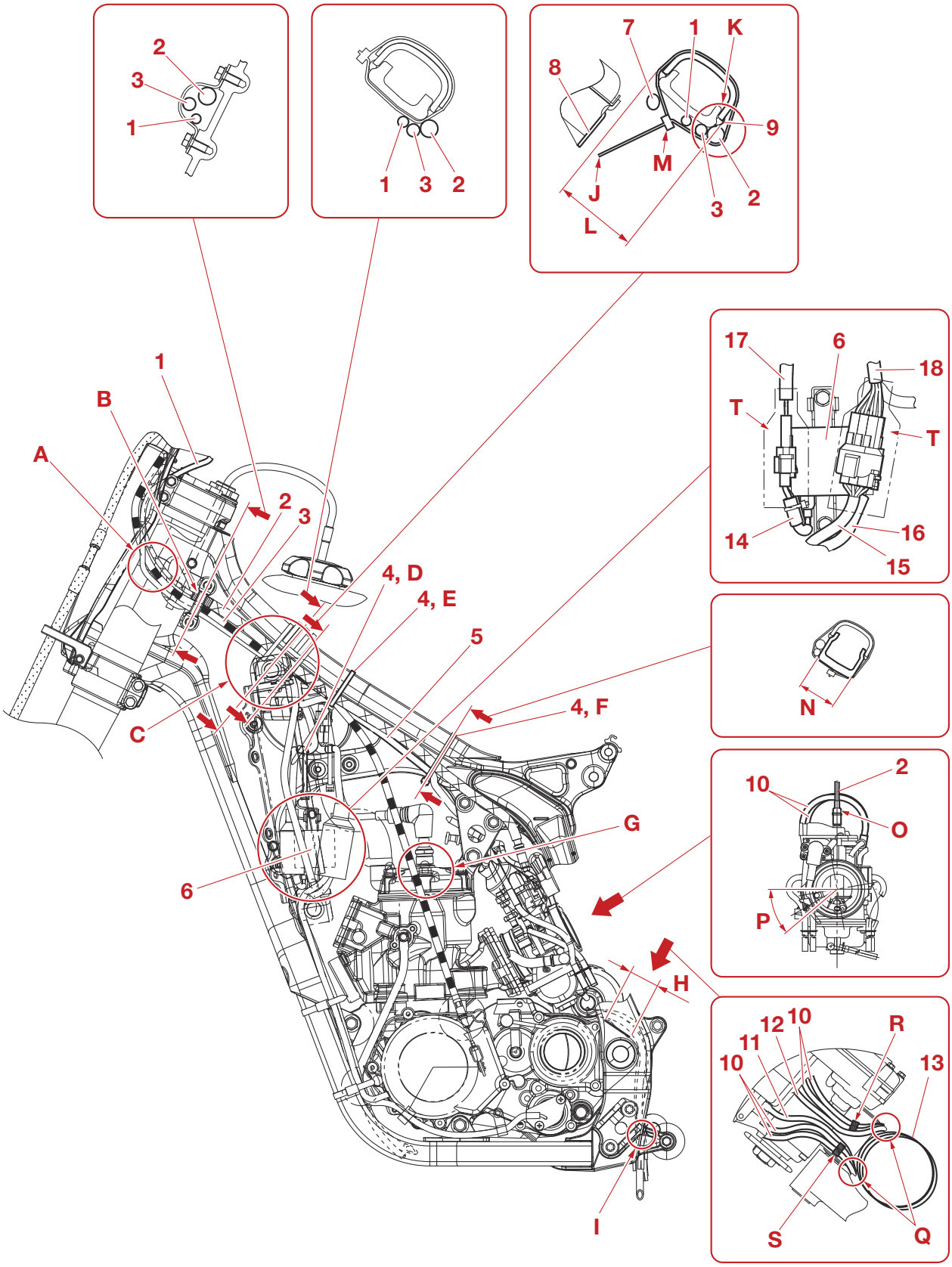

1. Engine stop switch lead
2. Throttle cable
3. Clutch cable
4. Clamp
5. Throttle position sensor lead
6. Ignition coil
7. Radiator breather hose
8. Radiator guard
9. Frame (weld bead)
10. Air vent hose
11. Crankcase breather hose
12. Overflow hose
13. Spring
14. Ignition coil lead
15. CDI magneto lead
16. Neutral switch lead
17. Sub-lead wire (Ignition coil)
18. Sub-lead wire (CDI magneto/neutral switch)

A. From the outside, pass the engine stop switch lead, the clutch cable and the throttle cable.
B. Align the throttle cable locating tape with the cable guide.
C. Pass the throttle cable, clutch cable and engine stop switch lead above the radiator hose. After tightening the clamp, cut off the end of the clamp so that the remaining end is 1–5 mm (0.04–0.20 in) in length. The tightening direction does not matter.
D. Clamp the ignition coil lead to the frame. Clamp the ignition coil lead at the front of the radiator mounting boss. When doing so, carry it out at the positioning tape as shown. After tightening the clamp, cut off the end of the clamp so that the remaining end is 1–5 mm (0.04–0.20 in) in length. The tightening direction does not matter.
E. Clamp the throttle cable, clutch cable and throttle position sensor lead to the frame. Clamp the throttle cable, clutch cable, and throttle position sensor lead at the position shown. After tightening the clamp, cut off the end of the clamp so that the remaining end is 1–5 mm (0.04–0.20 in) in length. The tightening direction does not matter.
F. Clamp the throttle cable and throttle position sensor lead to the frame as illustration. Place the lock portion of the clamp under the main pipe. After tightening the clamp, cut off the end of the clamp so that the remaining end is 1–5 mm (0.04–0.20 in) in length. The tightening direction does not matter.
G. Pass the clutch cable in front of the center of the cylinder head nut. When clamping the cables at “E”, make sure that the clutch cable is located in front of the cylinder head nut as shown in the illustration.
H. Range of clamp installation
I. Pass the air vent hose, overflow hose and crankcase breather hose between the frame and connecting rod.
J. Do not cut the end of the clamp.
K. Pass the throttle cable, clutch cable, engine stop switch lead below the frame (weld bead).
L. Locate the clamp ends in the arrowed range and inside the radiator guard.
M. Clamp the throttle cable, clutch cable and engine stop switch lead to the frame. Tighten the clamp so that the throttle cable, clutch cable and engine stop switch lead are not pulled when the handlebar is turned to the right.
N. Locate the clamp ends in the arrowed range.
O. Pass the throttle cable behind the air vent hose.
P. 30°
Tighten the clamp with its screw head in the arrowed range.
Q. Pass the air vent hose, overflow hose and crankcase breather hose so that they do not contact the spring.
R. Install the right-side clamp within the range “H”. (Installation position of the clamp: 50–70 mm (1.97–2.76 in) from the bracket)
S. Install the left-side clamp within the range “H” similar to the right-side clamp. (Installation position of the clamp: 80–110 mm (3.15–4.33 in) from the bracket)
T. Bring the connector cover into contact with the coupler.

Frame and engine (left side view)

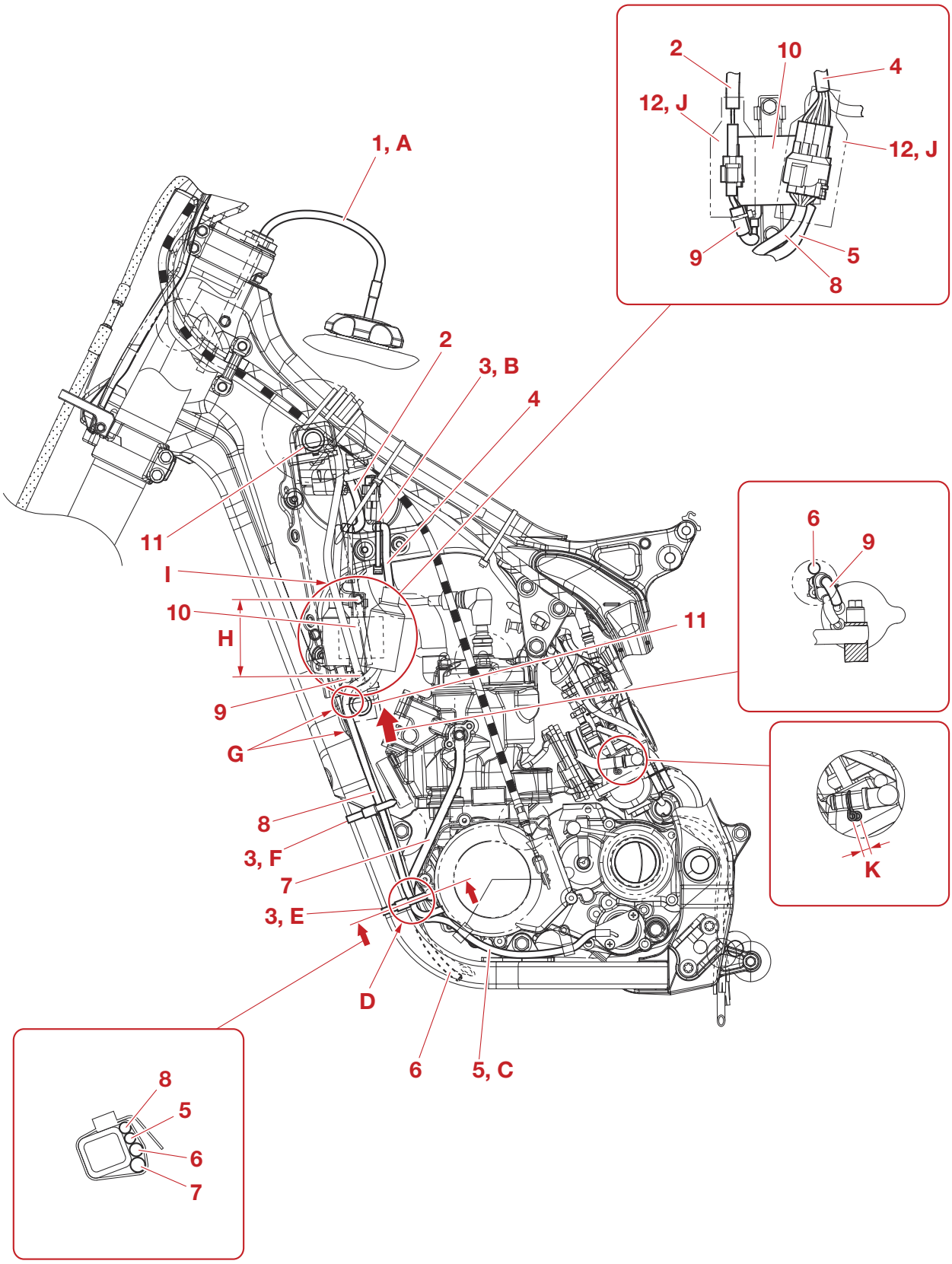

1. Fuel tank breather hose
2. Sub-lead wire (Ignition coil)
3. Clamp
4. Sub-lead wire (CDI magneto/neutral switch)
5. Neutral switch lead
6. Radiator breather hose
7. YPVS breather hose
8. CDI magneto lead
9. Ignition coil lead
10. Ignition coil
11. Radiator hose
12. Connector cover

A. Insert the fuel tank breather hose into the steering shaft hole.
B. Clamp the sub-lead wire (CDI magneto/neutral switch) to the frame at its locating tape. Clamp it at the rear of the radiator fitting boss. After tightening the clamp, cut off the end of the clamp so that the remaining end is 1–5 mm (0.04–0.20 in) in length. The tightening direction does not matter.
C. Do not allow the neutral switch lead to slacken except over the radiator hose.
D. Pass the radiator breather hose outside the engine bracket and inside the down tube. Then pass the radiator breather hose inside the CDI magneto lead.
E. Clamp the CDI magneto lead, radiator breather hose, YPVS breather hose and neutral switch lead to the frame. Be sure to clamp both the CDI magneto lead and the neutral switch lead at the rear frame. When doing so, be careful so that the radiator breather hose and YPVS breather hose are not crushed. Point the lock portion to the outside of the vehicle, and then insert the excess length of the clamp between the engine and the down tube.
F. Clamp the radiator breather hose, CDI magneto lead and neutral switch lead to the frame. Be sure to clamp both the CDI magneto lead and the neutral switch lead at the rear frame. When doing so, be careful so that the radiator breather hose is not crushed. Point the lock portion to the outside of the vehicle.
G. Pass the CDI magneto lead, radiator breather hose and neutral switch lead in front of the radiator hose. Then pass the radiator breather hose inside the CDI magneto lead and neutral switch lead.
H. Place the ignition lead within the area of the arrow as shown.
I. Pass the radiator breather hose and ignition coil lead between the frame and the radiator (left).
J. Bring the connector cover into contact with the coupler.
K. Install the clip within the area of the arrow as shown. Point the knob toward the lower side.

Frame and engine (right side view)

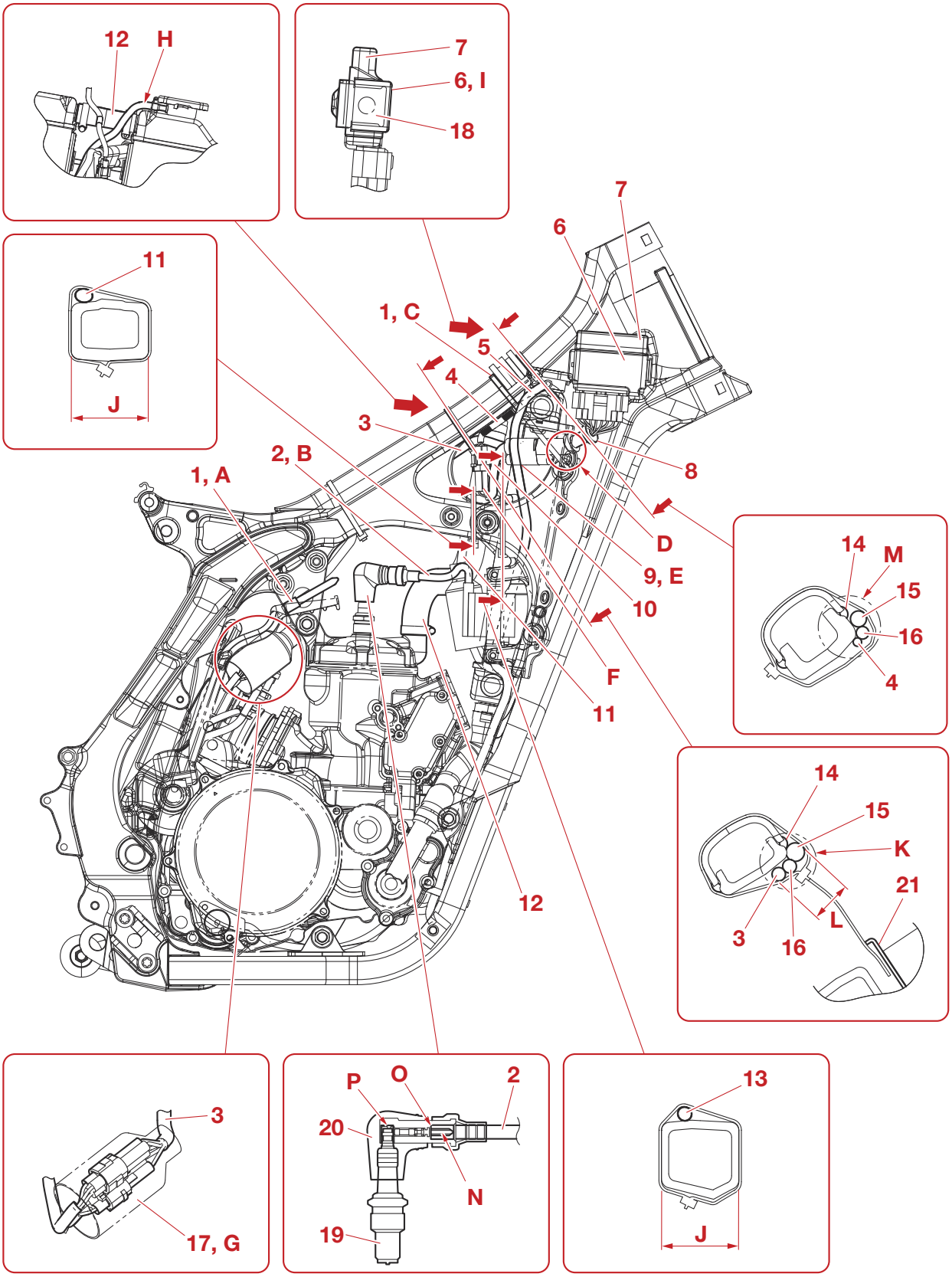

1. Clamp
2. High tension cord
3. Throttle position sensor lead
4. Engine stop switch lead
5. Radiator breather hose
6. CDI unit band
7. CDI unit
8. Sub-lead wire (CDI unit)
9. Joint connector
10. Sub-lead wire (engine stop switch)
11. CDI magneto lead
12. Radiator hose
13. Ignition coil lead
14. Frame (weld bead)
15. Throttle cable
16. Clutch cable
17. Connector cover
18. CDI unit stay
19. Spark plug
20. Spark plug cap
21. Radiator guard

A. Clamp the wire harness protecting tube to the right engine bracket. Do not cut the end of the clamp.
B. Pass the high tension cord to the right of the radiator hose so that the high tension cord does not contact the radiator hose.
C. Clamp at the position shown. Clamp the engine stop switch lead at the positioning tape as a reference.
D. Pass the sub-lead wire (CDI unit) between the frame and the radiator (right) and then above the radiator fitting boss.
E. Face the joint connector with its open end downward, and there is no pinching with peripheral parts.
F. Arrange the engine stop switch lead coupler on the right side of the vehicle's throttle position sensor lead.
G. Bring the connector cover into contact with the coupler.
H. Pass the radiator breather hose behind the radiator hose.
I. Insert the CDI unit band until it stops at the CDI unit stay.
J. Locate the clamp ends in the arrowed range.
K. Pass the throttle cable, clutch cable, throttle position sensor lead and solenoid lead below the frame (weld bead).
L. Locate the clamp ends in the arrowed range and inside the radiator guard. Do not cut the end of the clamp.
M. Pass the throttle cable, clutch cable and engine stop switch lead below the frame (weld bead).
N. Threaded portion
O. Push into the high tension cord until it contacts the base of the spark plug cap.
P. Insert the spark plug cap until it contacts the spark plug.

Handlebar (front view)

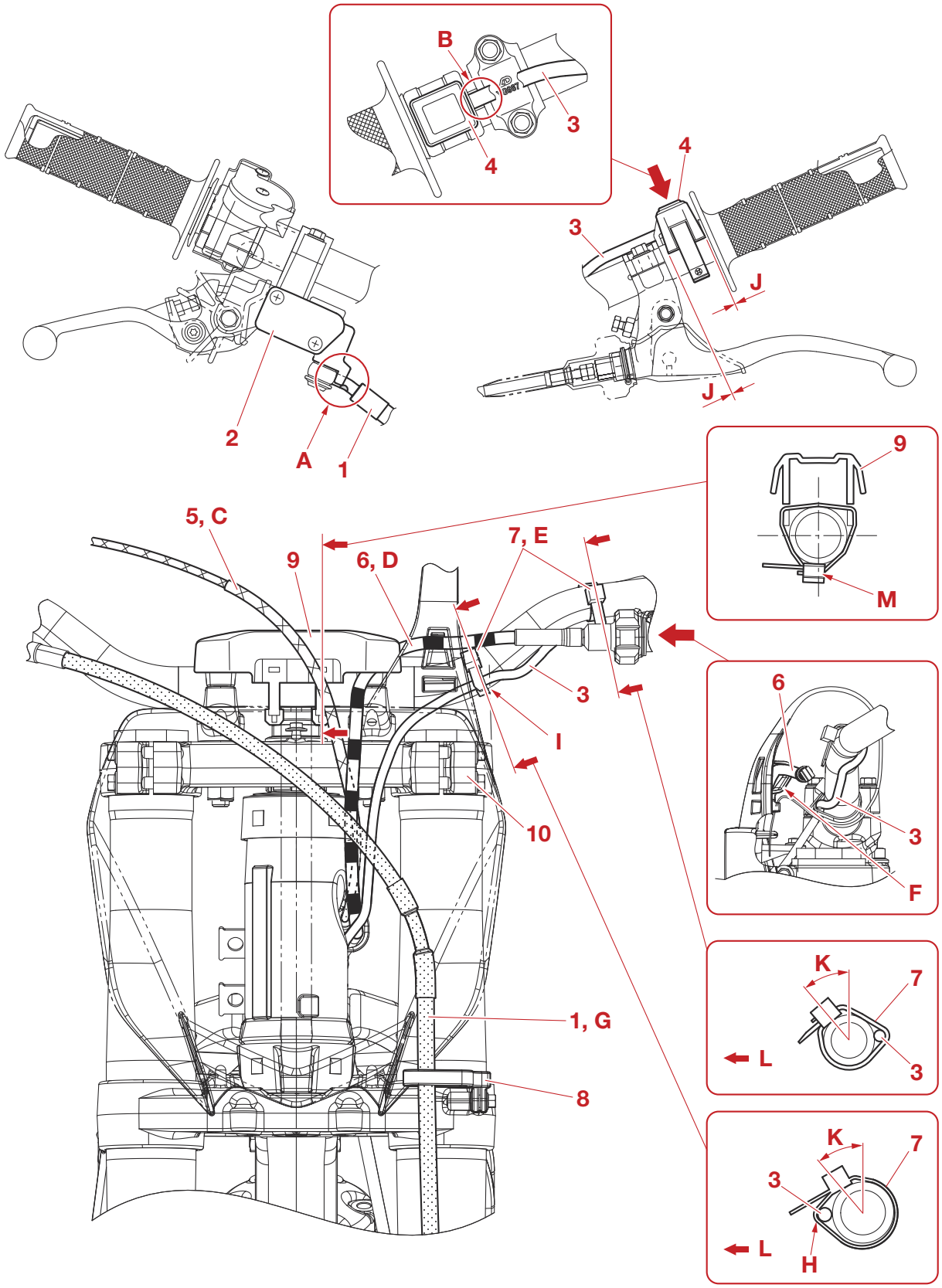

1. Brake hose
2. Master cylinder
3. Engine stop switch lead
4. Engine stop switch
5. Throttle cable
6. Clutch cable
7. Clamp
8. Cable guide
9. Handlebar protector
10. Upper bracket

A. Install the brake hose so that its pipe portion directs as shown and lightly touches the projection on the master cylinder, while the white paint side faces to the front of the vehicle.
B. Pass the engine stop switch lead in the middle of the clutch holder.
C. Pass the throttle cable upper side of the number plate mounting bracket.
D. Pass the clutch cable rear of the number plate band.
E. Clamp the engine stop switch lead to the handlebar. Do not cut the end of the clamp.
F. Pass the clutch cable through the cable guide on the number plate.
G. Pass the brake hose in front of the number plate and through the cable guide.
H. Fasten the engine stop switch lead at the center of the handlebar using the clamp.
I. Clamp by adjusting the outside of the lower end to the angle of the upper bracket.
J. 0 mm (0 in)
K. 30–50°
L. Front side of the vehicle
M. Secure the handlebar and handlebar protector with the plastic locking tie. Point the lock portion of the plastic locking tie to the lower side of the vehicle. The direction of the end does not matter.

Rear brake (right side view)

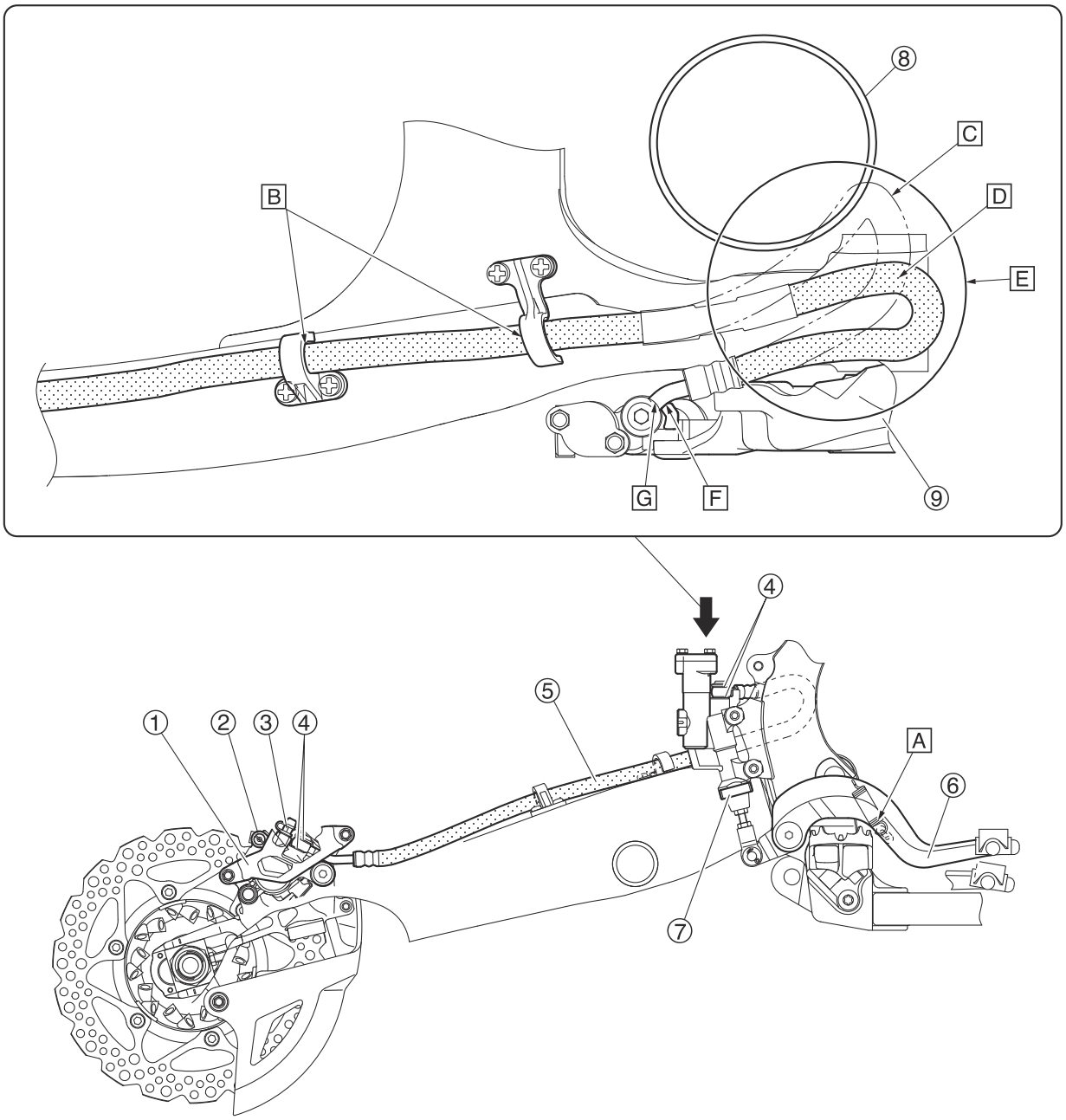

1. Protector
2. Rear brake caliper
3. Bleed screw
4. Gasket
5. Rear brake hose
6. Brake pedal
7. Rear brake master cylinder assembly
8. Spring
9. Frame

A. Install the spring as shown in the illustration.
B. Pass the rear brake hose into the rear brake hose holders.
C. Route the rear brake hose so that it is not bent as shown by the double-dash line.
D. Route the rear brake hose and spring so that they do not interfere with each other.
E. Make sure that the rear brake hose is not excessively twisted.
F. Make sure that the metal part of the rear brake hose contacts the stopper of the rear brake master cylinder.
G. Install the rear brake hose so that the bended portion of the metal part of the rear brake hose faces as shown in the illustration.

PERIODIC CHECKS AND ADJUSTMENTS

SERVICING PARTS.....3-1

MAINTENANCE INTERVALS.....3-2
MAINTENANCE INTERVALS.....3-2

PRE-OPERATION INSPECTION AND MAINTENANCE.....3-5
GENERAL INSPECTION AND MAINTENANCE.....3-5

ENGINE.....3-6
ADJUSTING THE PILOT AIR SCREW.....3-6
CHECKING THE ENGINE IDLING SPEED.....3-6
CHECKING THE THROTTLE GRIP.....3-6
CHECKING THE SPARK PLUG.....3-6
CHECKING THE TRANSMISSION OIL LEVEL.....3-7
CHANGING THE TRANSMISSION OIL.....3-7
ADJUSTING THE CLUTCH LEVER FREE PLAY.....3-8
ADJUSTING THE CLUTCH LEVER POSITION.....3-9
CLEANING THE AIR FILTER ELEMENT.....3-9
CHECKING THE CARBURETOR JOINT.....3-10
CHECKING THE CARBURETOR HOSES.....3-10
CHECKING THE EXHAUST SYSTEM.....3-11
CHECKING THE COOLANT LEVEL.....3-12
CHECKING THE COOLING SYSTEM.....3-12
CHANGING THE COOLANT.....3-12

CHASSIS.....3-14
ADJUSTING THE FRONT DISC BRAKE.....3-14
ADJUSTING THE REAR DISC BRAKE.....3-14
CHECKING THE BRAKE FLUID LEVEL.....3-15
CHECKING THE FRONT BRAKE PADS.....3-15
CHECKING THE REAR BRAKE PADS.....3-15
CHECKING THE FRONT BRAKE HOSE.....3-15
CHECKING THE REAR BRAKE HOSE.....3-16
CHECKING THE BRAKE OPERATION.....3-16
BLEEDING THE HYDRAULIC BRAKE SYSTEM.....3-16
DRIVE CHAIN SLACK.....3-17
CHECKING AND ADJUSTING THE STEERING HEAD.....3-18
LUBRICATING THE STEERING HEAD.....3-19
CHECKING THE FRONT FORK LEGS.....3-19
ADJUSTING THE FRONT FORK LEGS.....3-19
CHECKING THE REAR SHOCK ABSORBER ASSEMBLY.....3-21
ADJUSTING THE REAR SHOCK ABSORBER ASSEMBLY.....3-21
CHECKING THE SWINGARM OPERATION.....3-23
LUBRICATING THE SWINGARM PIVOT.....3-23
CHECKING THE CONNECTING ARM AND RELAY ARM.....3-23
CHECKING THE TIRES.....3-23
CHECKING AND TIGHTENING THE SPOKES.....3-24
CHECKING THE WHEELS.....3-24

CHECKING THE WHEEL BEARINGS.....3-24
CHECKING THE CHASSIS FASTENERS.....3-24
CHECKING AND LUBRICATING THE CABLES.....3-24
LUBRICATING THE BRAKE LEVER.....3-25
LUBRICATING THE CLUTCH LEVER.....3-25
LUBRICATING THE PEDAL.....3-25

ELECTRICAL SYSTEM.....3-26
CHECKING THE IGNITION TIMING.....3-26

EAM20202

SERVICING PARTS

Regularly check or replace the servicing parts shown in the illustration.

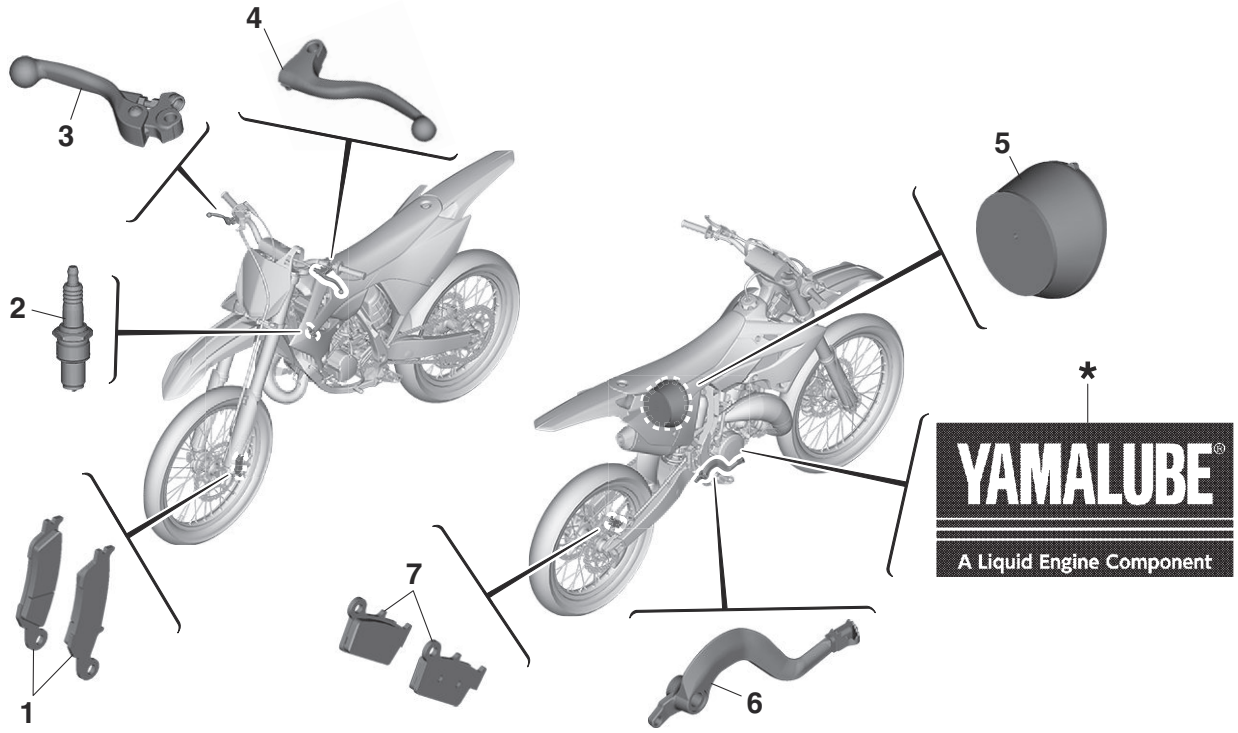

* Engine oil, lubricants & greases, care products.

Ref. No.	Part No.	Part name in parts catalog	Q'ty
1	B2W-25805-00	BRAKE PAD KIT	1
2	94702-00326	PLUG, SPARK (NGK BR8EG)	1
3	B2W-83922-00	LEVER 2	1
4	17D-83912-01	LEVER 1	1
5	4XM-14451-01	ELEMENT, AIR CLEANER	1
6	4XM-27200-21	PEDAL, BRAKE	1
7	1C3-W0046-50	BRAKE PAD KIT 2	1

TIP

The part number is subject to change. In that case, order the part from a Yamaha dealer by stating the identification number of your vehicle.

EAM20157

MAINTENANCE INTERVALS

EAM30369

MAINTENANCE INTERVALS

ECA25871

NOTICE

- **After a break-in or before each race, always check the points shown in "TORQUE-CHECK POINTS" for tightening torques and retighten them.**
- **Periodic inspection is essential in making full use of the machine performance. The life of parts varies significantly according to the environment in which the machine runs (e.g., rain, dirt, etc.). Therefore, earlier inspection is required by reference to the list below.**

TIP

Items marked with an asterisk should be performed by a Yamaha dealer as they require special tools, data and technical skills.

No.		Item	Routine	After break-in	Every race (about 2.5 hours)	Every third race (about 7.5 hours)	Every fifth race (about 12.5 hours)	As required
1	*	Piston	• Check piston for carbon deposits and cracks or damage. • Clean.	√	√			
			• Replace.				√	√
2	*	Piston rings	• Check piston ring end gap and rings for damage.	√	√			
			• Replace.			√		√
3	*	Piston pin and small end bearing	• Check piston pin and small end bearing for damage.		√			
			• Replace.					√
4	*	Cylinder head	• Check cylinder head for carbon deposits. • Clean.	√	√			
			• Check cylinder head gasket for damage. • Tighten cylinder head nuts if necessary.	√	√			
			• Replace cylinder head gasket.					√
5	*	Cylinder	• Check cylinder for score marks or wear. • Clean.	√	√			
			• Replace.					√
6	*	YPVS	• Check YPVS for carbon deposits and cracks or damage.	√	√			
			• Clean.	√	√			
7	*	Clutch	• Check clutch housing, friction plates, clutch plates and clutch springs for wear or damage. • Adjust.	√	√			
			• Replace.					√
8	*	Transmission	• Change the transmission oil.	√			√	
			• Check transmission for damage.					√
			• Replace bearings.					√
9	*	Shift forks, guide bars, shift drum	• Check all parts for wear and damage. • Replace if necessary.					√

No.		Item	Routine	After break-in	Every race (about 2.5 hours)	Every third race (about 7.5 hours)	Every fifth race (about 12.5 hours)	As required
10	*	Rotor nut (flywheel magneto)	• Tighten.	√			√	
11	*	Kickstarter system	• Check idle gear for damage. • Replace if necessary.					√
12	*	Exhaust system	• Check exhaust pipe and muffler for carbon deposits.	√	√			
			• Clean.				√	
13	*	Crankshaft	• Check crankshaft for carbon deposits and damage.				√	√
			• Clean.				√	√
14	*	Carburetor	• Check carburetor settings and for obstructions.	√	√			
			• Adjust and clean.	√	√			
15		Spark plug	• Check condition. • Clean and regap.	√	√			
			• Replace.					√
16	*	Drive chain	• Check chain slack, alignment and condition. • Adjust and thoroughly lubricate chain with Yamaha chain and cable lube or equivalent.	√	√			
			• Replace.					√
17	*	Cooling system	• Check coolant level and for leakage.	√	√			
			• Check hoses for cracks or damage.		√			
			• Check radiator cap spring operation.					√
			• Change coolant.	Every 2 years				√
18	*	Chassis fasteners	• Check all chassis fitting and fasteners. • Correct or tighten if necessary.	√	√			
19		Air filter element	• Clean.	√	√			
			• Replace.					√
20	*	Frame	• Clean and check for damage.	√	√			
21	*	Fuel line	• Clean and check for leakage.	√		√		
22	*	Brakes	• Adjust lever position and pedal position. • Lubricate pivot points. • Check brake disk surface. • Check fluid level and for leakage. • Tighten brake disk bolts, caliper bolts, master cylinder bolts and union bolts.	√	√			
			• Replace brake pads.					√
			• Replace brake fluid.	Every year				√

No.		Item	Routine	After break-in	Every race (about 2.5 hours)	Every third race (about 7.5 hours)	Every fifth race (about 12.5 hours)	As required
23	*	Front fork	• Check operation and for oil leakage. • Adjust if necessary. • Clean dust seal and lubricate with lithium-soap-based grease.	√	√			
			• Replace fork oil.	√			√	
			• Replace oil seals.					√
			• Replace protector seal.					√
24	*	Shock absorber assembly	• Check operation and adjust. • Tighten if necessary.	√	√			
			• Lubricate with lithium-soap-based grease.			√		√ (After washing the motorcycle or riding in the rain)
25	*	Drive chain roller and support guide	• Check for wear or damage. • Replace if necessary.					√
26	*	Rear suspension	• Check operation and tighten if necessary.	√	√			
			• Lubricate with molybdenum disulfide grease.	√	√			
27	*	Swingarm pivot bearings	• Check bearing assemblies for looseness. • Lubricate with molybdenum disulfide grease.	√	√			
28	*	Steering head	• Check operation, free play, and tighten if necessary.	√	√			
			• Clean and lubricate with lithium-soap-based grease.				√	
			• Replace bearings.					√
29	*	Tires and wheels	• Check tire air pressure, wheel runout, spokes for looseness, and tires for wear.	√	√			
			• Tighten sprocket bolts if necessary.	√	√			
			• Check wheel bearings for looseness.			√		
			• Lubricate wheel bearings with lithium-soap-based grease.			√		
			• Replace wheel bearings.					√
30	*	Moving parts and cables	• Lubricate.	√	√			
31	*	Throttle grip	• Check operation. • Check throttle grip free play, and adjust if necessary. • Lubricate cable and grip housing.	√	√			

EAM20134

PRE-OPERATION INSPECTION AND MAINTENANCE

Before riding for break-in operation, practice or a race, make sure the machine is in good operating condition.
Before using this machine, check the following points.

EAM30209

GENERAL INSPECTION AND MAINTENANCE

Item	Inspect	Page
Coolant	Check that coolant is filled up to the radiator cap. Check the cooling system for leakage.	3-12, 3-12, 3-12, 6-4, 6-4
Fuel	Check that a fresh gasoline is filled in the fuel tank. Check the fuel line for leakage.	1-21
Transmission oil	Check that the oil level is correct. Check the crankcase for leakage.	3-7, 3-7
Gear shifter and clutch	Check that gears can be shifted correctly in order and that the clutch operates smoothly.	3-8, 3-9
Throttle grip/Housing	Check that the throttle grip operation and free play are correctly adjusted. Lubricate the throttle grip and housing, if necessary.	3-6, 3-24
Brakes	Check the play of front brake and effect of front and rear brake.	3-14, 3-14, 3-15, 3-15, 3-15, 3-15, 3-16, 3-16
Drive chain	Check drive chain slack and alignment. Check that the drive chain is lubricated properly.	3-17, 4-73, 4-73, 4-74, 4-74, 4-74
Wheels	Check for excessive wear and tire pressure. Check for loose spokes and have no excessive play.	3-23, 3-24, 3-24, 3-24
Steering	Check that the handlebar can be turned smoothly and have no excessive play.	3-18
Front forks and rear shock absorber	Check that they operate smoothly and there is no oil leakage.	3-19, 3-19, 3-21, 3-21, 3-23
Cables (wires)	Check that the clutch and throttle cables move smoothly. Check that they are not caught when the handlebars are turned or when the front forks travel up and down.	—
Exhaust pipe	Check that the exhaust pipe is tightly mounted and has no cracks.	3-11
Rear wheel sprocket	Check that the rear wheel sprocket tightening bolt is not loose.	4-10, 4-10, 4-10, 4-10, 4-11, 4-11
Lubrication	Check for smooth operation. Lubricate if necessary.	3-24, 3-25, 3-25, 3-25
Bolts and nuts	Check the chassis and engine for loose bolts and nuts.	1-24
Lead connectors	Check that the stator coil assembly, CDI and ignition coil are connected tightly.	1-13
Settings	Is the machine set suitably for the condition of the racing course and weather or by taking into account the results of test runs before racing? Are inspection and maintenance completely done?	10-10, 10-10, 10-10, 10-11, 10-11, 10-12, 10-12, 10-13, 10-13, 10-15, 10-16

TIP

Perform usual maintenance enough so that, in the race course, a confirmation of that and simple setting adjustments may only be left, in order to get enough time to use effectively.

EAM20135
ENGINE

EAM30607
ADJUSTING THE PILOT AIR SCREW
1. Adjust:
   - Pilot air screw "1"

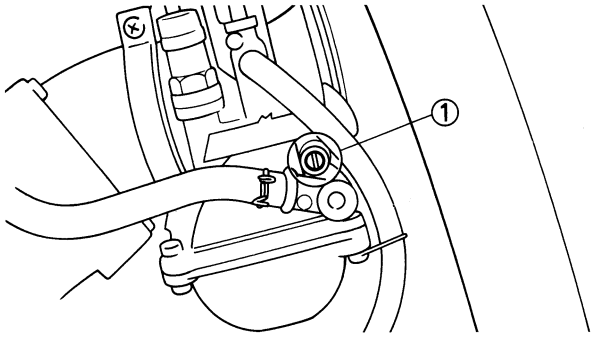

TIP
To optimize the fuel flow at a smaller throttle opening, each vehicle's pilot air screw has been individually set at the factory. Before adjusting the pilot air screw, turn it in fully and count the number of turns. Record this number as the factory-set number of turns out.

   a. Turn in the pilot air screw until it is lightly seated.
   b. Turn out the pilot air screw to the factory-set number of turns.

	Air screw turns out 1-1/4

EAM30412
CHECKING THE ENGINE IDLING SPEED
1. Start the engine and thoroughly warm it up.
2. Adjust:
   - Engine idling speed
     a. Turn the throttle stop screw "1" until the engine runs at the lowest possible speed.

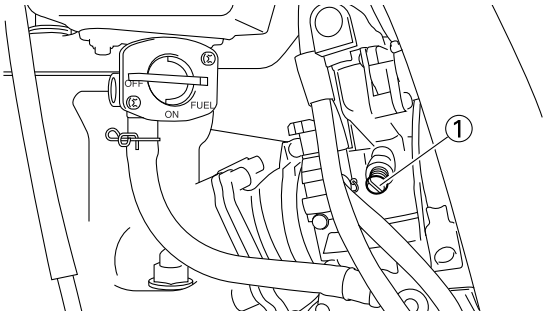

EAM30475
CHECKING THE THROTTLE GRIP
TIP
Prior to adjusting throttle grip free play, the engine idling speed should be adjusted.

1. Check:
   - Throttle grip free play "a"
     Out of specification → Regulate.

	Throttle grip free play 3.0–5.0 mm (0.12–0.20 in)

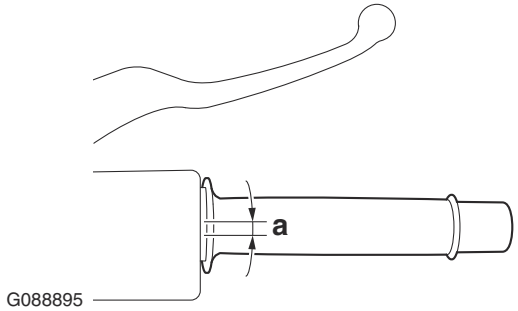

2. Adjust:
   - Throttle grip free play
     a. Slide the adjuster cover.
     b. Loosen the locknut "1".
     c. Turn the adjuster "2" until the specified free play is obtained.
     d. Tighten the locknut.

EWA18470
WARNING
After adjusting the throttle grip free play, start the engine and turn the handlebar to the right and to the left to ensure that this does not cause the engine idling speed to change.

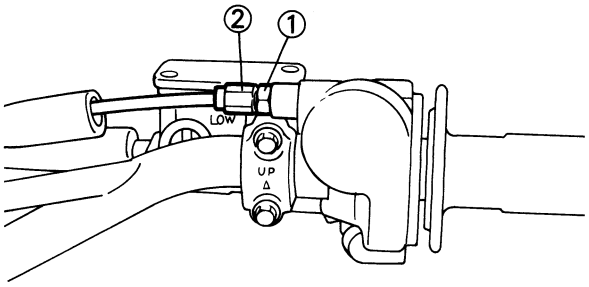

EAM30254
CHECKING THE SPARK PLUG
1. Disconnect:
   - Spark plug cap
2. Remove:
   - Spark plug

ECA13330
NOTICE
Before removing the spark plug, blow away any dirt accumulated in the spark plug well with compressed air to prevent it from falling

into the cylinder.

3. Check:
   - Spark plug type
     Incorrect → Change.

	Manufacturer/model **NGK/BR8EG**

4. Check:
   - Electrode "1"
     Damage/wear → Replace the spark plug.
   - Insulator "2"
     Abnormal color → Replace the spark plug.
     Normal color is medium-to-light tan.
5. Clean:
   - Spark plug
     (with a spark plug cleaner or wire brush)
6. Measure:
   - Spark plug gap "a"
     (with a wire thickness gauge)
     Out of specification → Regap.

	Spark plug gap **0.5–0.6 mm (0.020–0.024 in)**

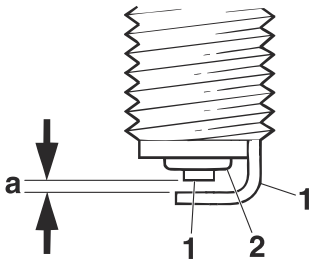

G088879

7. Install:
   - Spark plug

	Spark plug **20 N·m (2.0 kgf·m, 15 lb·ft)**

TIP

Before installing the spark plug, clean the spark plug and gasket surface.

8. Connect:
   - Spark plug cap

EAM30539

CHECKING THE TRANSMISSION OIL LEVEL

1. Start the engine, warm it up for several minutes and wait for five minutes.
2. Place the machine on a level place and hold it up on upright position by placing the maintenance stand under the engine.
3. Check:
   - Transmission oil level
     a. Remove the oil check bolt "1".
     b. Inspect the oil level.

TIP

Be sure the machine is positioned straight up when inspecting the oil level.

EWA21090

WARNING

Never attempt to remove the oil check bolt just after high speed operation. The heated oil could spout out, causing danger. Wait until the oil cools down.

Oil flows out → Oil level is correct.
Oil does not flow out → Oil level is low. Add transmission oil until oil flows out.

	Type **Motor oil SAE 10W-40 type SG or higher** **Quantity (disassembled)** **0.80 L (0.85 US qt, 0.70 Imp.qt)** **Quantity** **0.75 L (0.79 US qt, 0.66 Imp.qt)**

   c. Inspect the gasket (oil check bolt), replace if damaged.
   d. Tighten the oil check bolt.

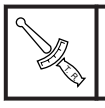	**Oil check bolt** **10 N·m (1.0 kgf·m, 7.4 lb·ft)**

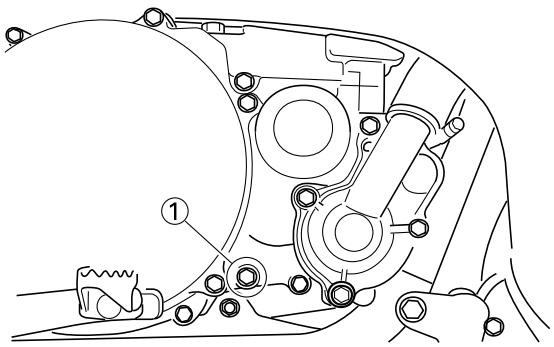

EAM30540

CHANGING THE TRANSMISSION OIL

1. Start the engine and warm it up for several minutes and wait for five minute.
2. Place the machine on a level place and hold it on upright position by placing the maintenance stand under the engine.
3. Place a suitable container under the engine.
4. Remove:
   - Oil drain bolt "1"
   - Oil filler cap "2"

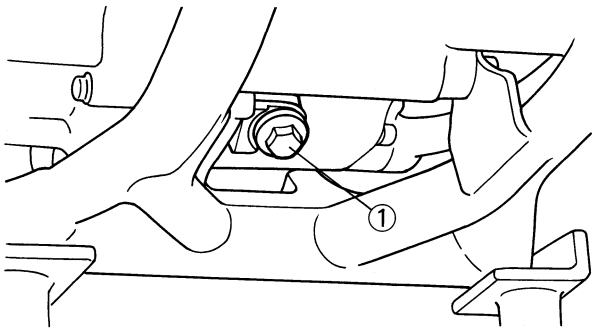

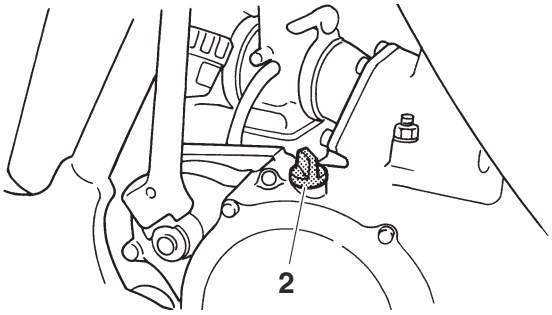

5. Drain:
   - Transmission oil
6. Install:
   - Aluminum washer New
   - Oil drain bolt

	Oil drain bolt **23 N·m (2.3 kgf·m, 17 lb·ft)**

7. Fill:
   - Transmission oil

	Type **Motor oil SAE 10W-40 type SG or higher** **Quantity (disassembled)** **0.80 L (0.85 US qt, 0.70 Imp.qt)** **Quantity** **0.75 L (0.79 US qt, 0.66 Imp.qt)**

8. Check:
   - Oil leakage
9. Check:
   - Transmission oil level
10. Install:
    - Oil filler cap

EAM30216

ADJUSTING THE CLUTCH LEVER FREE PLAY

1. Check:
   - Clutch lever free play "a"
     Out of specification → Regulate.

	Clutch lever free play **7.0–12.0 mm (0.28–0.47 in)**

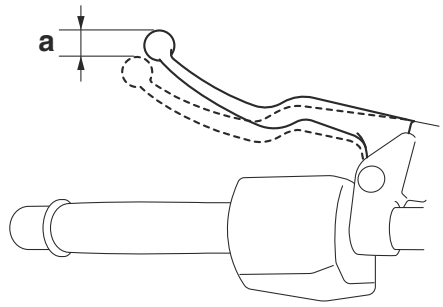

G088887

2. Adjust:
   - Clutch lever free play

Handlebar side

a. Turn the adjuster "1" until the specified clutch lever free play is obtained.

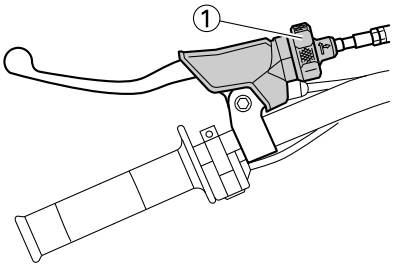

TIP

If the clutch lever free play cannot be obtained on the handlebar side, use the adjuster on the clutch cable side.

Clutch cable side

a. Slide the clutch cable cover.
b. Loosen the locknut "1".
c. Turn the adjuster "2" until the specified clutch lever free play is obtained.
d. Tighten the locknut "1".

	Locknut (clutch cable side) **4.3 N·m (0.43 kgf·m, 3.2 lb·ft)**

e. Return the clutch cable cover to its original position.

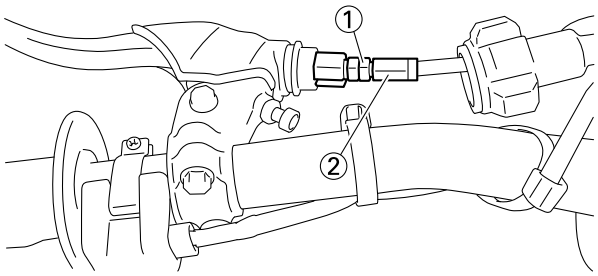

EAM30370

ADJUSTING THE CLUTCH LEVER POSITION

1. Adjust:
   - Clutch lever position "a"
     Loosen the locknut "1" and use the adjuster "2" to adjust the clutch lever position "a" as desired.

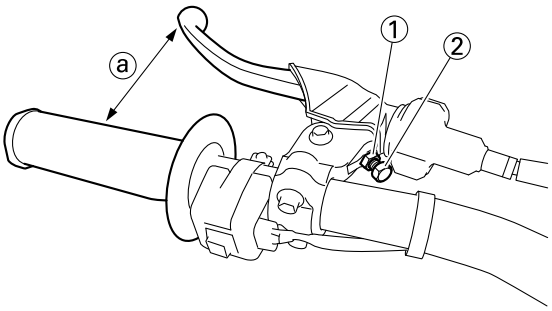

2. Tighten:
   - Locknut

	Locknut (clutch lever position) 4.8 N·m (0.48 kgf·m, 3.5 lb·ft)

EAM30219

CLEANING THE AIR FILTER ELEMENT

1. Remove:
   - Seat
     Refer to "GENERAL CHASSIS" on page 4-1.
2. Remove:
   - Fitting bolt "1"
   - Washer "2"
   - Air filter element "3"
   - Air filter guide "4"

ECA14401

NOTICE

Never operate the engine without the air filter element installed. Unfiltered air will cause rapid wear of engine parts and may damage the engine. Operating the engine without the air filter element will also affect carburetor synchronization, leading to poor engine performance and possible overheating.

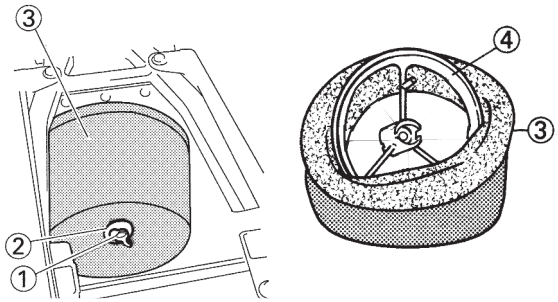

3. Wash:
   - Air filter element
     a. After washing the element with air filter cleaner or kerosene, squeeze and dry it completely.

EWA19110

WARNING

Do not use gasoline or organic (acid/alkaline) volatile oil for washing.

ECA24280

NOTICE

Do not twist the element when squeezing the element.

4. Check:
   - Air filter element
     Damage → Replace.
5. Apply:
   - Yamaha foam air filter oil or other quality foam air filter oil
     a. Put the air filter element into a plastic bag and drip the filter oil into the bag.
     b. With the element inside the bag, rub it thoroughly so that the element is evenly permeated with the oil.
     c. Wrap the element in a clean cloth, rub the element gently, and wipe off any excess oil.

TIP

- The element should be permeated with oil so that it is wet but not dripping.
- When replacing the element, permeate the element in oil by using the same procedure as when cleaning.

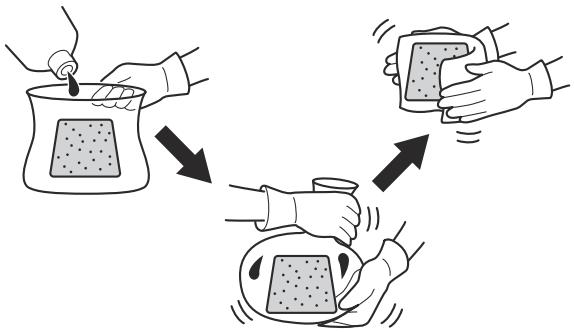

6. Install:
   - Air filter guide “1”

TIP

Align the projection “a” on filter guide with the hole “b” in air filter element.

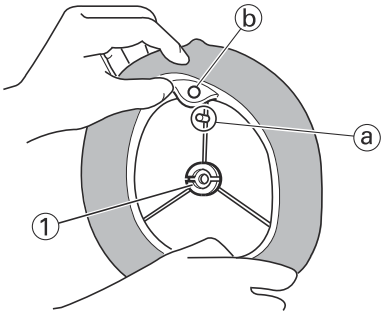

7. Apply:
   - Lithium-soap-based grease
     (on the matching surface “a” on air filter element)

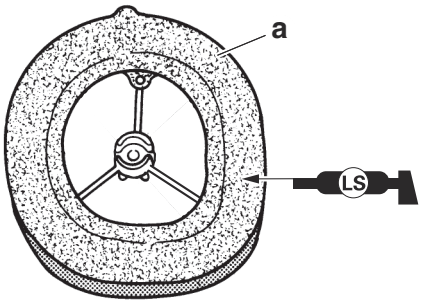

8. Install:
   - Air filter element “1”
   - Washer
   - Fitting bolt

	Fitting bolt **2.0 N·m (0.20 kgf·m, 1.5 lb·ft)**

TIP

Align the projection “a” on filter guide with the hole “b” in air filter case.

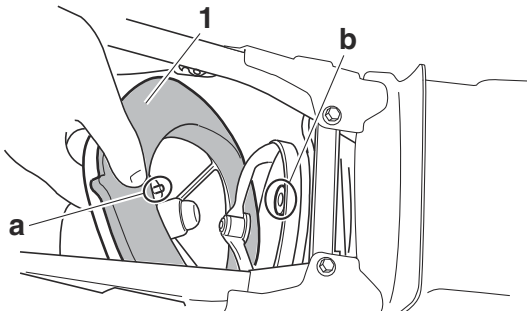

ECA26420

NOTICE

Make sure that the air filter element is properly seated in the air filter case. The engine should never be operated without the air filter element installed, otherwise the piston(s) and/or cylinder(s) may become excessively worn.

EAM30541

CHECKING THE CARBURETOR JOINT

1. Check:
   - Carburetor joint “1”
     Cracks/damage → Replace.

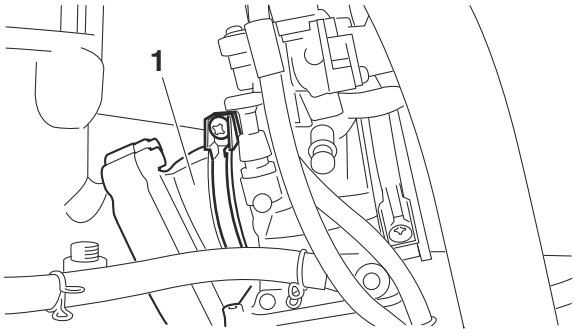

EAM30542

CHECKING THE CARBURETOR HOSES

The following procedure applies to all of the fuel and vacuum hoses.

1. Check:
   - Fuel hose
   - Carburetor breather hose “1”
   - Overflow hose “2”
     Cracks/damage → Replace.
     Loose connection → Connect properly.

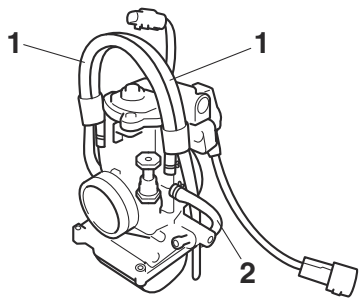

EAM30221

CHECKING THE EXHAUST SYSTEM

1. Remove:
   - Exhaust pipe
   - Silencer
     Refer to "ENGINE REMOVAL" on page 5-1.
2. Check:
   - Exhaust pipe
   - Silencer
     Crack/damage → Replace.
     Refer to "ENGINE REMOVAL" on page 5-1.
3. Check:
   - Silencer fiber
     Damage → Replace.
4. Replace:
   - Silencer fiber
     a. Remove the silencer bolts "1", silencer "2" and fiber bolts "3".

TIP

Remove the inner pipe while holding the silencer in place with a vise etc.

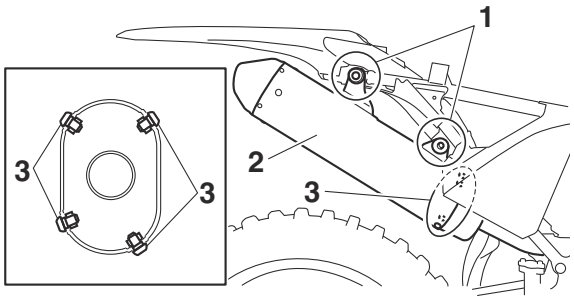

b. Remove the inner pipe "1".
c. Replace the fiber "2".
d. Install the inner pipe.

TIP

Apply heat-resistant sealant to the areas shown, making sure that there are no gaps in the beads of sealant.

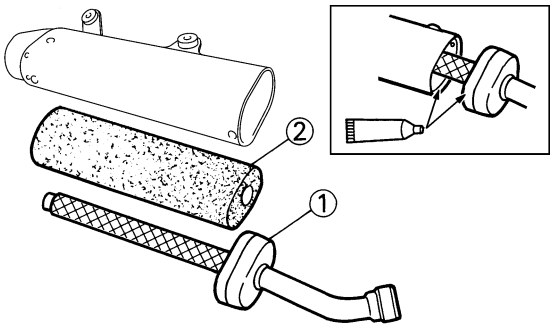

5. Check:
   - Gasket "1"
     Damage → Replace.
     Refer to "ENGINE REMOVAL" on page 5-1.

TIP

Install the gaskets with their depressed "a" facing outward.

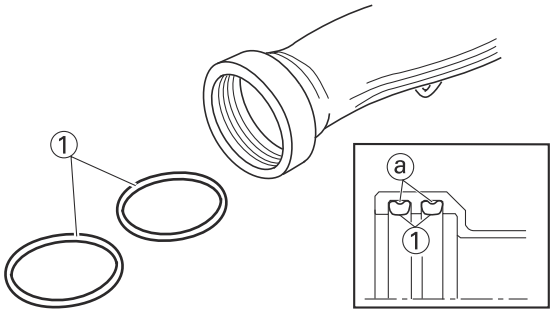

6. Check:
   - Tightening torques

Fiber bolt "1"
10 N·m (1.0 kgf·m, 7.4 lb·ft)
LOCTITE®
Silencer bolt "2"
12 N·m (1.2 kgf·m, 8.9 lb·ft)
LOCTITE®
Side cover bolt (front side)
7 N·m (0.7 kgf·m, 5.2 lb·ft)
Side cover bolt (rear side)
9 N·m (0.9 kgf·m, 6.6 lb·ft)

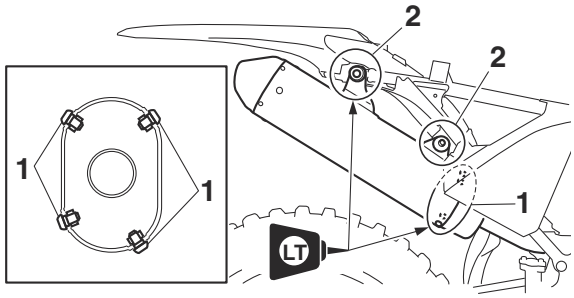

EAM30210

CHECKING THE COOLANT LEVEL

EWA13030

WARNING

A hot radiator is under pressure. Therefore, do not remove the radiator cap when the engine is hot. Scalding hot fluid and steam may be blown out, which could cause serious injury. When the engine has cooled, open the radiator cap as follows:
Place a thick rag or a towel over the radiator cap and slowly turn the radiator cap counterclockwise toward the detent to allow any residual pressure to escape. When the hissing sound has stopped, press down on the radiator cap and turn it counterclockwise to remove.

1. Stand the vehicle upright on a level surface.
2. Remove:
   - Radiator cap "1"

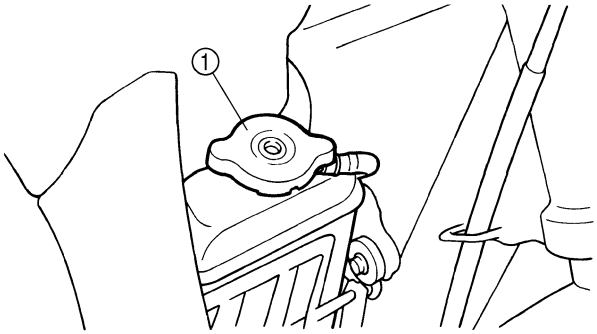

3. Check:
   - Coolant level
     Maximum level "a" or below → Add coolant up to the maximum level.

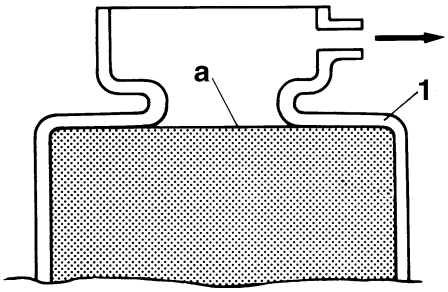

1. Radiator

ECA24260

NOTICE

- **Adding water instead of coolant lowers the antifreeze content. If, therefore, water is used instead of coolant, check, and if necessary, adjust the antifreeze concentration.**
- **Use only distilled water. However, if distilled water is not available, soft water may be used.**

4. Start the engine, warm this up for several minutes, and then stop it.
5. Check:
   - Coolant level

TIP

Before checking the coolant level, wait a few minutes until the coolant has settled.

EAM30211

CHECKING THE COOLING SYSTEM

1. Remove:
   - Seat
   - Side cover (left/right)
   - Air scoop (left/right)
     Refer to "GENERAL CHASSIS" on page 4-1.
2. Check:
   - Radiator
   - Radiator hose
     Crack/damage → Replace.
     Refer to "RADIATOR" on page 6-3.
3. Install:
   - Air scoop (left/right)
   - Seat
   - Side cover (left/right)
     Refer to "GENERAL CHASSIS" on page 4-1.

EAM30212

CHANGING THE COOLANT

EWA13030

WARNING

A hot radiator is under pressure. Therefore, do not remove the radiator cap when the engine is hot. Scalding hot fluid and steam may be blown out, which could cause serious injury. When the engine has cooled, open the radiator cap as follows:
Place a thick rag or a towel over the radiator cap and slowly turn the radiator cap counterclockwise toward the detent to allow any residual pressure to escape. When the hissing sound has stopped, press down on the radiator cap and turn it counterclockwise to remove.

1. Place a container under the engine.
2. Remove:
   - Coolant drain bolt "1"

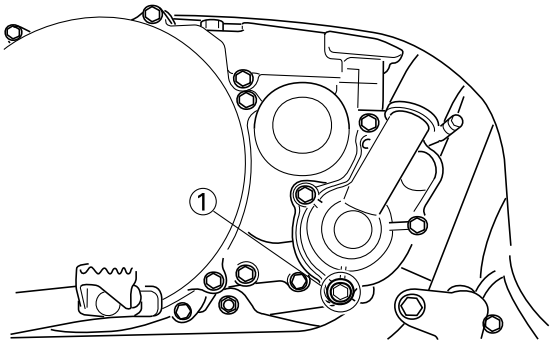

3. Remove:
   - Radiator cap
     Slowly loosen the radiator cap to drain coolant.

TIP

When the radiator cap is loosened, coolant will gush out transversely; therefore, bring the container near to the outlet.

4. Thoroughly flush the cooling system with clean tap water.
5. Install:
   - Copper washer New
   - Coolant drain bolt

	Coolant drain bolt **10 N·m (1.0 kgf·m, 7.4 lb·ft)**

6. Pour coolant.

	Recommended coolant **High quality ethylene glycol antifreeze containing anti-corrosion for aluminum engine** **Radiator (including all routes)** **1.18 L (1.25 US qt, 1.04 Imp.qt)** **Coolant mixing ratio** **1:1 (Coolant:Water)**

EWA13040

WARNING

- **If coolant splashes in your eyes, thoroughly wash them with water and consult a doctor.**
- **If coolant splashes on your clothes, quickly wash it away with water and then with soap and water.**
- **If coolant is swallowed, induce vomiting and get immediate medical attention.**

ECA13481

NOTICE

- **Adding water instead of coolant lowers the antifreeze content of the coolant. If water is used instead of coolant, check, and if necessary, correct the antifreeze concentration of the coolant.**
- **Use only distilled water. However, if distilled water is not available, soft water may be used.**
- **If coolant comes into contact with painted surfaces, immediately wash them with water.**
- **Do not mix different types of antifreeze.**

7. Install:
   - Radiator cap
8. Start the engine, warm this up for several minutes, stop it, and then wait for it to cool down.
9. Check:
   - Coolant level
     Refer to “CHECKING THE COOLANT LEVEL” on page 3-12.

EAM20136
CHASSIS

EAM30479
ADJUSTING THE FRONT DISC BRAKE

TIP

There should be no free play at the brake lever end.

1. Check:
   - Brake lever position "a"

	Brake lever position **100 mm (3.94 in)** **Extent of adjustment** **86–105 mm (3.39–4.13 in)**

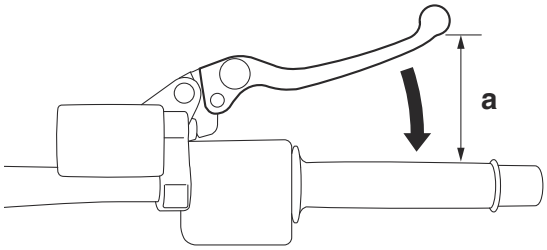

G088889

2. Remove:
   - Brake lever cover
3. Adjust:
   - Brake lever position
     a. Loosen the locknut "1".
     b. Turn the adjusting bolt "2" until the specified brake lever position is obtained.

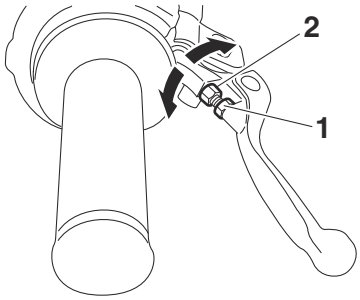

c. Tighten the locknut.

	Locknut (front brake lever position) **5 N·m (0.5 kgf·m, 3.7 lb·ft)**

EWA13050

WARNING

A soft or spongy feeling in the brake lever can indicate the presence of air in the brake system. Before the vehicle is operated, the air must be removed by bleeding the brake system. Air in the brake system will considerably reduce braking performance.

ECA13490

NOTICE

After adjusting the brake lever position, make sure there is no brake drag.

4. Install:
   - Brake lever cover

EAM30480
ADJUSTING THE REAR DISC BRAKE

1. Adjust:
   - Brake pedal position
     a. Loosen the locknut "1".
     b. Turn the adjusting nut "2" until the brake pedal is in the correct position.

EWA20710

WARNING

Adjust the pedal height between the maximum "A" and the minimum "B" as shown. (In this adjustment, the bolt "3" end "a" should protrude out of the lower adjusting nut "4" but not be less than 2.0 mm (0.08 in) "b" away from the brake pedal "5").

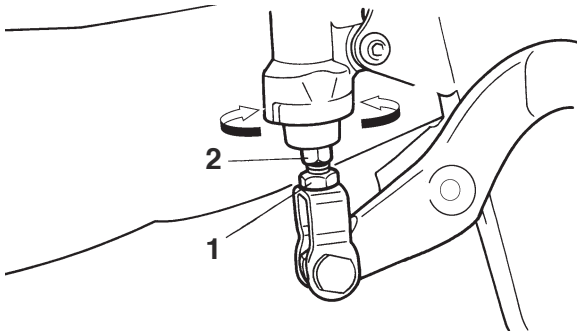

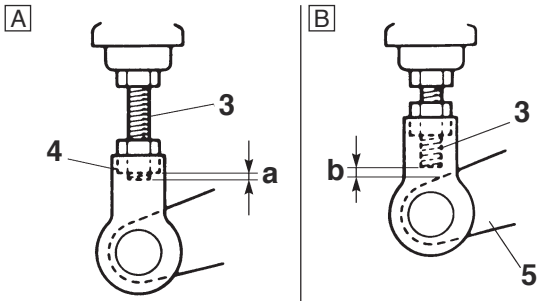

c. Tighten the locknut to specification.

	Rear brake pedal adjusting locknut **6 N·m (0.6 kgf·m, 4.4 lb·ft)**

EWA19150

WARNING

A soft or spongy feeling in the brake pedal

can indicate the presence of air in the brake system. Before running, bleed the brake system. Air in the brake system will cause braking performance to be reduced.

ECA13510

NOTICE

After adjusting the brake pedal position, make sure there is no brake drag.

EAM30234

CHECKING THE BRAKE FLUID LEVEL

1. Stand the vehicle upright on a level surface.

TIP

In order to ensure a correct reading of the brake fluid level, make sure that the top of the brake fluid reservoir is horizontal.

2. Check:
   - Brake fluid level
     The minimum level mark "a" or below → Add.

	Specified brake fluid **DOT 4**

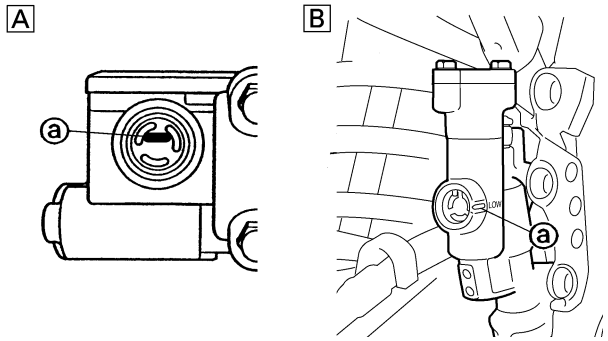

A. Front brake
B. Rear brake

EWA13090

WARNING

- **Use only the designated brake fluid. Other brake fluids may cause the rubber seals to deteriorate, causing leakage and poor brake performance.**
- **Refill with the same type of brake fluid that is already in the system. Mixing brake fluids may result in a harmful chemical reaction, leading to poor brake performance.**
- **When refilling, be careful that water does not enter the brake fluid reservoir. Water will significantly lower the boiling point of the brake fluid and could cause vapor lock.**

ECA13540

NOTICE

Brake fluid may damage painted surfaces and plastic parts. Therefore, always clean up any spilt brake fluid immediately.

EAM30231

CHECKING THE FRONT BRAKE PADS

The following procedure applies to all of the brake pads.

1. Operate the brake.
2. Check:
   - Front brake pad
     Wear indicator grooves "1" almost touch the brake disc → Replace the brake pads as a set.
     Refer to "FRONT BRAKE" on page 4-13.

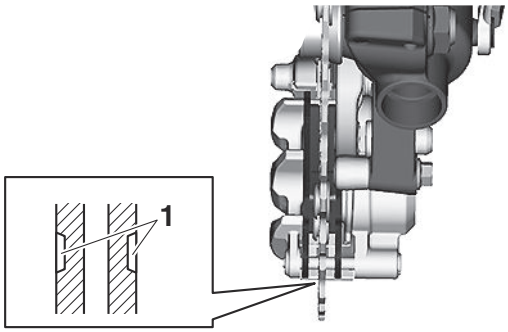

EAM30232

CHECKING THE REAR BRAKE PADS

The following procedure applies to all of the brake pads.

1. Operate the brake.
2. Check:
   - Rear brake pad
     Wear indicator grooves "1" almost touch the brake disc → Replace the brake pads as a set.
     Refer to "REAR BRAKE" on page 4-24.

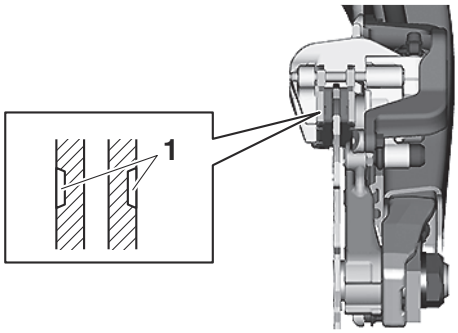

EAM30478

CHECKING THE FRONT BRAKE HOSE

1. Check:
   - Brake hose
     Cracks/damage/wear → Replace.
2. Check:
   - Brake hose clamp

Loose connection → Tighten the clamp bolt.
3. Stand the vehicle upright and apply the front brake several times.
4. Check:
   - Brake hose
     Brake fluid leaks → Replace the damaged brake hose.
     Refer to "FRONT BRAKE" on page 4-13.

EAM30498
CHECKING THE REAR BRAKE HOSE
1. Check:
   - Brake hose
     Cracks/damage/wear → Replace.
2. Check:
   - Brake hose holder
     Loose connection → Tighten the holder bolt.
3. Hold the vehicle upright and apply the rear brake several times.
4. Check:
   - Brake hose
     Brake fluid leakage → Replace the damaged hose.
     Refer to "REAR BRAKE" on page 4-24.

EAM30499
CHECKING THE BRAKE OPERATION
1. Check:
   - Brake operation
     Brake not working properly → Check the brake system.
     Refer to "FRONT BRAKE" on page 4-13 and "REAR BRAKE" on page 4-24.

TIP
Drive on the dry road, operate the front and rear brakes separately and check to see if the brakes are operating properly.

EAM30477
BLEEDING THE HYDRAULIC BRAKE SYSTEM
EWA19140
WARNING
Bleed the brake system whenever:
- **The system is disassembled.**
- **A brake hose is loosened, disconnected, or replaced.**
- **The brake fluid level is very low.**
- **Brake operation is faulty.**

1. Remove:
   - Brake master cylinder cap
   - Reservoir diaphragm
   - Reservoir float (front brake)
   - Protector (rear brake)

TIP
- Be careful not to spill any brake fluid or allow the reservoir to overflow.
- Make sure that there is enough brake fluid before applying the brake. Ignoring this precaution could allow air to enter the brake system, considerably lengthening the bleeding procedure.
- If bleeding is difficult, it may be necessary to let the brake fluid settle for a few hours. Repeat the bleeding procedure when the tiny bubbles in the hose have disappeared.

2. Bleed the brake system.
   a. Fill the reservoir to the proper level with the recommended brake fluid.
   b. Install the reservoir diaphragm.
   c. Connect the plastic hose "1" to the bleed screw "2" securely, and place a container under the end of the plastic hose.

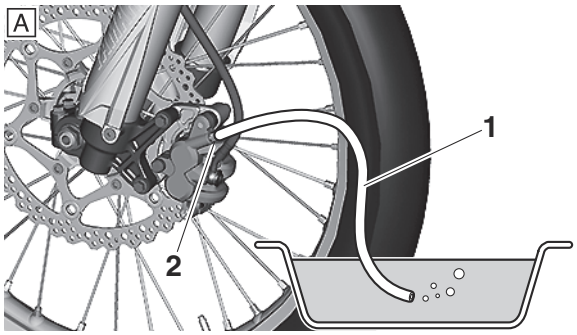

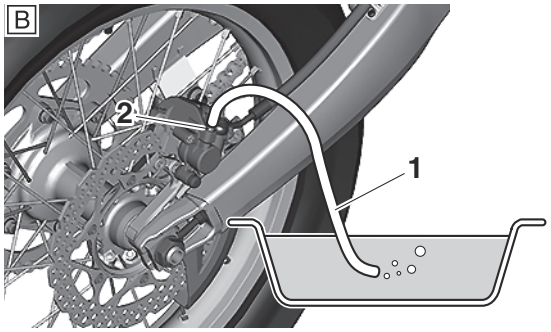

A. Front
B. Rear

   d. Slowly apply the brake several times.
   e. Fully pull the brake lever or fully press down the brake pedal and hold it in position.
   f. Loosen the bleed screw.

TIP
Loosening the bleed screw will release the pressure in the brake caliper and cause the brake lever to contact the throttle grip or the brake pedal to fully extend.

g. Tighten the bleed screw and then release the brake lever or brake pedal.
h. Repeat steps (d) to (g) until all of the air bubbles have disappeared from the brake fluid in the plastic hose.

TIP
During the procedure, keep adding brake fluid to the reservoir.

ECA24320
NOTICE
- **Wipe off any brake fluid on the brake discs, tires, wheels, etc.**
- **Brake fluid may erode painted surfaces or plastic parts. Always clean up spilled fluid immediately.**

i. Tighten the bleed screw.

	Brake caliper bleed screw **6 N·m (0.6 kgf·m, 4.4 lb·ft)**

j. Pour brake fluid to the reservoir up to the specified level.
Refer to "CHECKING THE BRAKE FLUID LEVEL" on page 3-15.

EWA13110
WARNING
After bleeding the hydraulic brake system, check the brake operation.

EAM30481
DRIVE CHAIN SLACK

ECA13550
NOTICE
A drive chain that is too tight will overload the engine and other vital parts, and one that is too loose can skip and damage the swingarm or cause an accident. Therefore, keep the drive chain slack within the specified limits.

Checking the drive chain slack
1. Use a maintenance stand to raise the rear wheel off the ground.

EWA13120
WARNING
Securely support the vehicle so that there is no danger of it falling over.

2. Shift the transmission into the neutral position.
3. Pull the drive chain up above the drive chain guide installation bolt with a force of about 50 N (5.0 kgf, 37 lbf).
4. Check:
   - Drive chain slack "a"
     Out of specification → Regulate.

TIP
Measure drive chain slack between the drive chain guide and the bottom of the chain as shown.

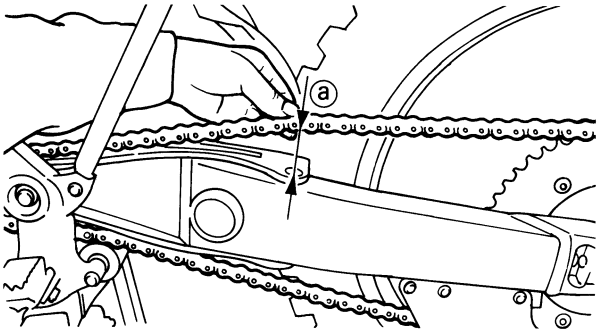

	Drive chain slack (Maintenance Stand) **48.0–58.0 mm (1.89–2.28 in)**

Adjusting the drive chain slack
EWA13120
WARNING
Securely support the vehicle so that there is no danger of it falling over.

1. Adjust:
   - Drive chain slack
     a. Loosen the wheel axle nut "1".
     b. Loosen both locknuts "2".
     c. Turn the adjusting bolt "3" until the specified drive chain slack is obtained.

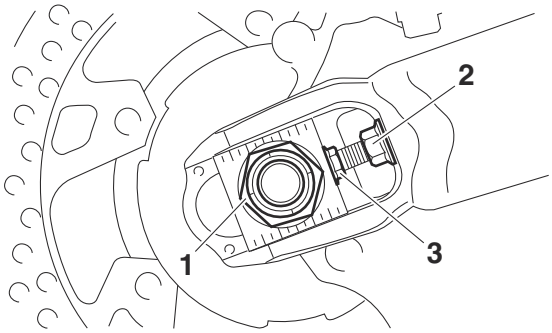

TIP
- To maintain the proper wheel alignment, adjust both sides evenly.
- Push the rear wheel forward to make sure that there is no clearance between the swingarm end plates and the ends of the swingarm.

d. Tighten the wheel axle nut.

	Rear wheel axle nut **125 N·m (12.5 kgf·m, 92 lb·ft)**

e. Tighten the drive chain puller locknut.

	Drive chain puller locknut **19 N·m (1.9 kgf·m, 14 lb·ft)**

EAM30247

CHECKING AND ADJUSTING THE STEERING HEAD

1. Use a maintenance stand to raise the front wheel off the ground.

EWA13120

WARNING

Securely support the vehicle so that there is no danger of it falling over.

2. Check:
   - Steering head
     Grasp the bottom of the front fork legs and gently rock the front fork.
     Blinding/looseness → Adjust the steering head.
3. Remove:
   - Handlebar
     Refer to “HANDLEBAR” on page 4-35.
   - Upper bracket
     Refer to “STEERING HEAD” on page 4-55.
4. Adjust:
   - Steering head
     a. Remove the washer “1”.

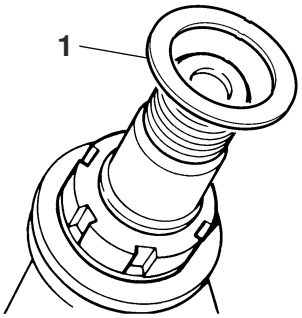

b. After loosening the ring nut “2” with a steering nut wrench “3”, tighten it to the specified torque.

TIP

- Set the torque wrench at a right angle to the steering nut wrench.
- Move the steering to the left and right a couple of times to check that it moves smoothly.

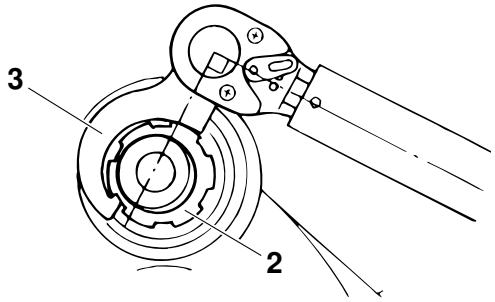

	Steering nut wrench **90890-01403** **Exhaust flange nut wrench** **YU-A9472**

	Steering ring nut (initial tightening torque) **38 N·m (3.8 kgf·m, 28 lb·ft)**

c. Turn the front fork to the right and left a few times, and make sure that the steering rotates smoothly. If it does not turn smoothly, remove the lower bracket and check the upper and lower bearings.
   Refer to “STEERING HEAD” on page 4-55.
d. Loosen the ring nut fully turn and then tighten it to specification with a steering nut wrench.

EWA21110

WARNING

Do not overtighten the steering ring nut.

	Steering ring nut (final tightening torque) **7 N·m (0.7 kgf·m, 5.2 lb·ft)**

e. Check the steering head for looseness or binding by turning the front fork all the way in both directions. If any binding is felt, remove the lower bracket and check the upper and lower bearings.
   Refer to “STEERING HEAD” on page 4-55.
f. Install the washer “1”.

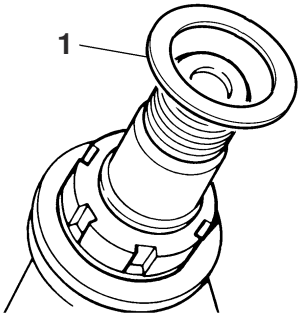

5. Install:
   - Upper bracket
     Refer to “STEERING HEAD” on page 4-55.
   - Handlebar
     Refer to “HANDLEBAR” on page 4-35.

EAM30502

LUBRICATING THE STEERING HEAD

1. Lubricate:
   - Upper bearing
   - Lower bearing
   - Bearing race

	Recommended lubricant **Lithium-soap-based grease**

EAM30338

CHECKING THE FRONT FORK LEGS

1. Stand the vehicle upright on a level surface.

EWA13120

WARNING

Securely support the vehicle so that there is no danger of it falling over.

2. Check:
   - Inner tube
     Damage/scratches → Replace.
   - Front fork leg
     Oil leaks between inner tube and outer tube → Replace the oil seal.
3. Hold the vehicle upright and apply the front brake.
4. Check:
   - Front fork operation
     Push down hard on the handlebar several times and check if the front fork rebounds smoothly.
     Unsmooth operation → Correct or replace.
     Refer to “FRONT FORK” on page 4-43.
5. Check:
   - Protector guide “1”
     Out of specification → Replace.

TIP

The protector guide reaches the limit of its use when it is worn down to the same height “a” as of the outer tube circumference.

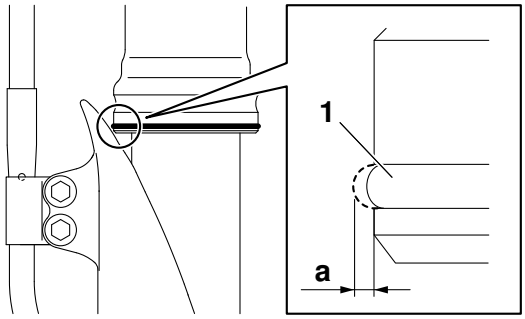

6. Remove:
   - Protector
   - Dust seal “1”

ECA24330

NOTICE

Be careful not to damage the dust seal and the inner tube by a driver.

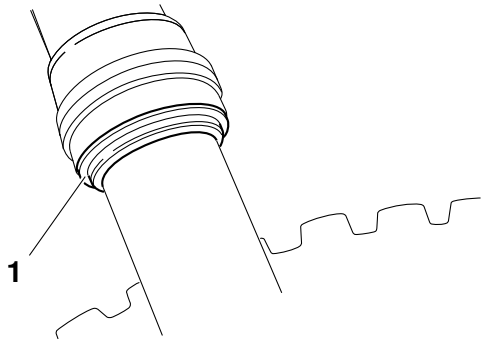

7. Clean:
   - Dust seal “a”
   - Oil seal “b”

TIP

- Clean the dust seal and oil seal after every run.
- Apply lithium-soap-based grease on the inner tube.

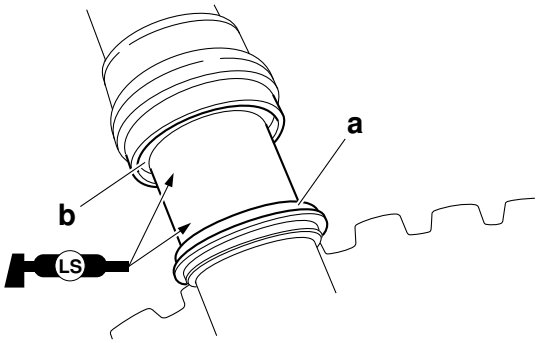

EAM30239

ADJUSTING THE FRONT FORK LEGS

EWA19180

WARNING

- **Always adjust the left and right front forks**

evenly. If this is not done, the vehicle may have poor stability.
- **Securely support the vehicle so that there is no danger of it falling over.**

Rebound damping

ECA24340

NOTICE

Do not turn the adjuster forcibly beyond its adjusting range.

1. Adjust:
   - Rebound damping
     a. Turn the adjuster "1" in the direction of "a" or "b" to make an adjustment.

Direction "a"
Rebound damping is increased (suspension is harder).
Direction "b"
Rebound damping is decreased (suspension is softer).

Rebound damping
Minimum (soft)
20 click(s) in direction "b"*
Standard
14 click(s) in direction "b"*
Maximum (hard)
0 click(s) in direction "b"*
***With the adjusting screw fully turned in direction "a"**

TIP

Although the total number of clicks of a damping force adjusting mechanism may not exactly match the above specifications due to small differences in production, the actual number of clicks always represents the entire adjusting range. To obtain a precise adjustment, it would be advisable to check the number of clicks of each damping force adjusting mechanism and to modify the specifications as necessary.

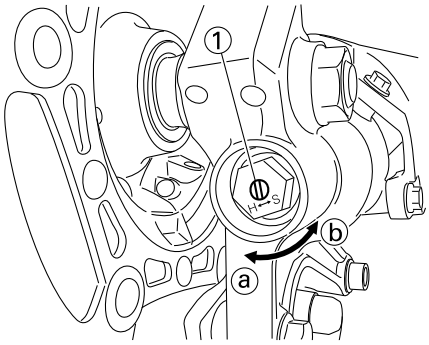

Compression damping

ECA24350

NOTICE

Do not turn the adjuster forcibly beyond its adjusting range.

1. Adjust:
   - Compression damping
     a. Turn the adjuster "1" in the direction of "a" or "b" to make an adjustment.

Direction "a"
Compression damping is increased (suspension is harder).
Direction "b"
Compression damping is decreased (suspension is softer).

Compression damping
Minimum (soft)
20 click(s) in direction "b"*
Standard
9 click(s) in direction "b"*
Maximum (hard)
0 click(s) in direction "b"*
***With the adjusting screw fully turned in direction "a"**

TIP

Although the total number of clicks of a damping force adjusting mechanism may not exactly match the above specifications due to small differences in production, the actual number of clicks always represents the entire adjusting range. To obtain a precise adjustment, it would be advisable to check the number of clicks of each damping force adjusting mechanism and to modify the specifications as necessary.

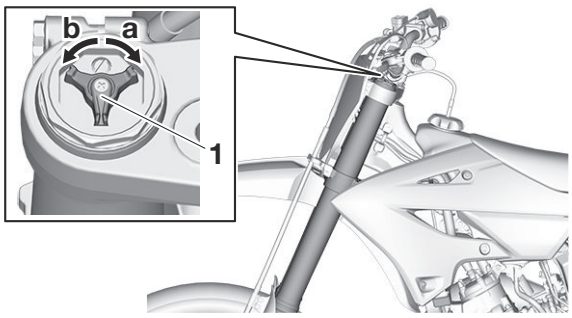

Air bleeding from front fork

TIP

If the front fork initial movement feels stiff during a run, relieve the front fork internal pressure.

1. Use a maintenance stand to raise the front wheel off the ground.

EWA13120

WARNING

Securely support the vehicle so that there is no danger of it falling over.

2. Remove the bleed screw "1" and release the internal pressure from the front fork.
3. Tighten:
   - Bleed screw

	Bleed screw (front fork) **1.3 N·m (0.13 kgf·m, 0.95 lb·ft)**

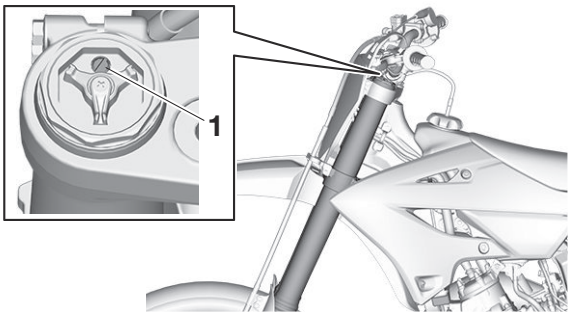

EAM30482

CHECKING THE REAR SHOCK ABSORBER ASSEMBLY

1. Stand the vehicle upright on a level surface.

EWA13120

WARNING

Securely support the vehicle so that there is no danger of it falling over.

2. Check:
   - Rear shock absorber assembly
     Gas leaks/oil leaks → Replace the rear shock absorber assembly.
     Refer to "REAR SHOCK ABSORBER ASSEMBLY" on page 4-61.
3. Check:
   - Rear shock absorber assembly smooth action
   - Rear suspension link smooth action
     Sit astride the seat and shake your body up and down several times to check whether the rear shock absorber assembly operates smoothly.
     Unsmooth operation → Correct or replace.
     Refer to "REAR SHOCK ABSORBER ASSEMBLY" on page 4-61.

EAM30242

ADJUSTING THE REAR SHOCK ABSORBER ASSEMBLY

Use a maintenance stand to raise the rear wheel off the ground.

EWA13120

WARNING

Securely support the vehicle so that there is no danger of it falling over.

Spring preload

ECA24360

NOTICE

Do not turn the adjuster forcibly beyond its adjusting range.

1. Remove:
   - Rear frame
     Refer to "REAR SHOCK ABSORBER ASSEMBLY" on page 4-61.
2. Adjust:
   - Spring preload
     a. Loosen the locknut "1".
     b. Loosen the adjuster "2" until there is some clearance between the spring and the adjuster.
     c. Measure the spring free length "a".

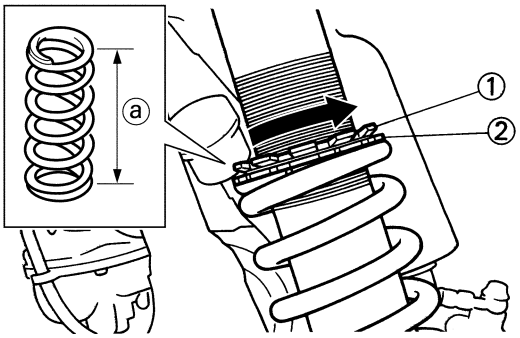

     d. Turn the adjuster in the direction of "b" or "c" to make an adjustment.

Direction "b"
Spring preload is increased (suspension is harder).
Direction "c"
Spring preload is decreased (suspension is softer).

Spring preload adjusting positions
Minimum
Position in which the spring is turned in 1.5 mm (0.06 in) from its free length.
Standard
Position in which the spring is turned in 7.0 mm (0.28 in) from its free length.
Maximum
Position in which the spring is turned in 20.5 mm (0.81 in) from its free length.

TIP

- Be sure to remove all dirt and mud from around the locknut and adjusting ring before adjustment.
- The length of the spring (installed) changes 1.5 mm (0.06 in) per turn of the adjusting ring.

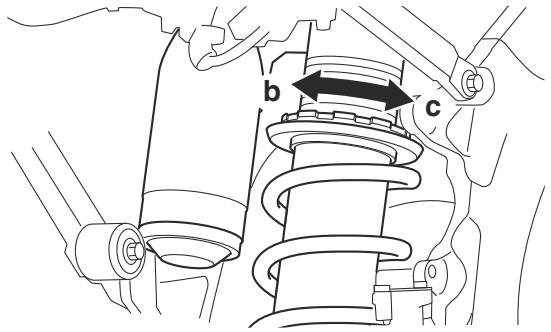

e. Tighten the locknut.

3. Install:
   - Rear frame
     Refer to "REAR SHOCK ABSORBER ASSEMBLY" on page 4-61.

Rebound damping

ECA24370

NOTICE

Do not turn the adjuster forcibly beyond its adjusting range.

1. Adjust:
   - Rebound damping
     a. Turn the adjuster "1" in the direction of "a" or "b" to make an adjustment.

Direction "a"
Rebound damping is increased (suspension is harder).
Direction "b"
Rebound damping is decreased (suspension is softer).

Rebound damping
Minimum (soft)
20 click(s) in direction "b"*
Standard
8 click(s) in direction "b"*
Maximum (hard)
0 click(s) in direction "a"
***With the adjusting screw fully turned in direction "a"**

TIP

Although the total number of clicks of a damping force adjusting mechanism may not exactly match the above specifications due to small differences in production, the actual number of clicks always represents the entire adjusting range. To obtain a precise adjustment, it would be advisable to check the number of clicks of each damping force adjusting mechanism and to modify the specifications as necessary.

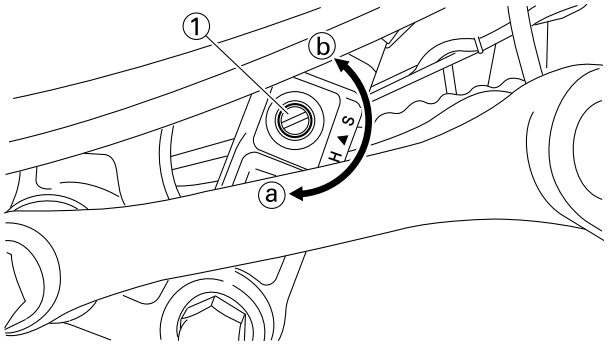

Compression damping (for fast compression damping)

ECA24370

NOTICE

Do not turn the adjuster forcibly beyond its adjusting range.

1. Adjust:
   - Compression damping (for fast compression damping)
     a. Turn the adjuster "1" in the direction of "a" or "b" to make an adjustment.

Direction "a"
Compression damping is increased (suspension is harder).
Direction "b"
Compression damping is decreased (suspension is softer).

Fast compression damping
Minimum (soft)
2 turn(s) in direction "b"*
Standard
1-1/8 turn(s) in direction "b"*
Maximum (hard)
0 turn(s) in direction "b"*
***With the adjusting screw fully turned in direction "a"**

TIP

To obtain a precise adjustment, it is advisable to check the actual total number of turns of the damping force adjusting mechanism. This adjustment range may not exactly match the specifications listed due to small differences in production.

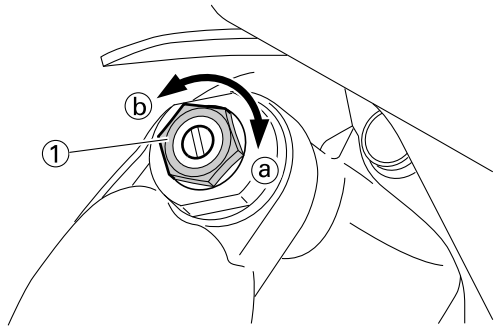

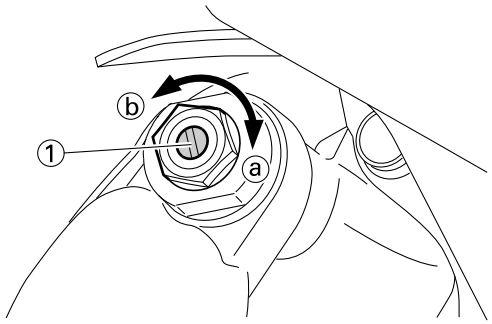

Compression damping (for slow compression damping)

ECA24390

NOTICE

Do not turn the adjuster forcibly beyond its adjusting range.

1. Adjust:
   - Compression damping (for slow compression damping)
     a. Turn the adjuster "1" in the direction of "a" or "b" to make an adjustment.

Direction "a"
Compression damping is increased (suspension is harder).
Direction "b"
Compression damping is decreased (suspension is softer).

Slow compression damping
Minimum (soft)
20 click(s) in direction "b"*
Standard
9 click(s) in direction "b"*
Maximum (hard)
0 click(s) in direction "b"*
***With the adjusting screw fully turned in direction "a"**

TIP

Although the total number of clicks of a damping force adjusting mechanism may not exactly match the above specifications due to small differences in production, the actual number of clicks always represents the entire adjusting range. To obtain a precise adjustment, it would be advisable to check the number of clicks of each damping force adjusting mechanism and to modify the specifications as necessary.

EAM30240

CHECKING THE SWINGARM OPERATION

1. Check:
   - Swingarm smooth action
   - Swingarm free play
     Refer to "SWINGARM" on page 4-68.

EAM30500

LUBRICATING THE SWINGARM PIVOT

1. Lubricate:
   - Oil seal
   - Collar

Recommended lubricant
Lithium-soap-based grease

Refer to "INSTALLING THE SWINGARM" on page 4-70.

EAM30501

CHECKING THE CONNECTING ARM AND RELAY ARM

Refer to "CHECKING THE CONNECTING ARM AND RELAY ARM" on page 4-64.

EAM30243

CHECKING THE TIRES

1. Measure:
   - Tire pressure
     Out of specification → Regulate.

Tire air pressure (measured on cold tires)
Front
100 kPa (1.00 kgf/cm^2, 15 psi)
Rear
100 kPa (1.00 kgf/cm^2, 15 psi)

TIP

- Check the tire while it is cold.
- Because if the bead stopper tightening nut is loose when the tire pressure is low, the tire could slip off the rim, thus be sure to check and tighten the bead stopper tightening nut "a".
- If the tire valve stem "b" is found tilted, the tire is considered to be slipping off its position.

Correct the tire position.

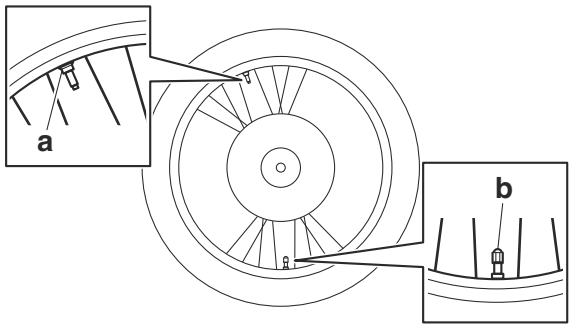

a. Bead stopper tightening nut
b. Tire valve stem

EAM30244

CHECKING AND TIGHTENING THE SPOKES

1. Check:
   - Spoke
     Bend/damage → Replace.
     Loose → Tighten.
     Tap the spokes with a screwdriver.

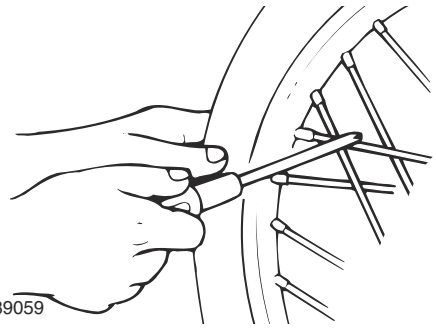

TIP

A tight spoke will emit a clear, ringing tone; a loose spoke will sound flat.

2. Tighten:
   - Spoke
     (with a spoke nipple wrench "1")

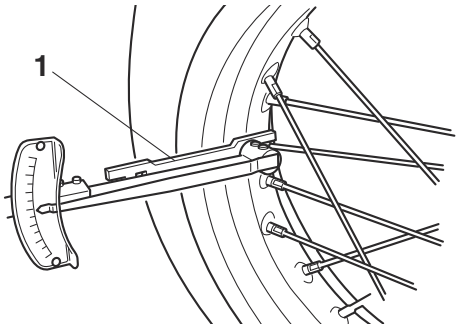

	Spoke nipple wrench (6–7) **90890-01521** **Spoke nipple wrench (6–7)** **YM-01521**
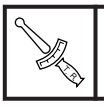	**Nipple (spoke)** **2.5 N·m (0.25 kgf·m, 1.8 lb·ft)**

TIP

- Do not give a half turn (180°) or more for one tightening.
- Make sure that tightening after a break-in is done until the initial looseness in nipples disappears.
- Make sure that tightening is done in stages, not at a time.

EAM30245

CHECKING THE WHEELS

1. Check:
   - Wheel
     Damage/out-of-round → Replace.

EWA13260

WARNING

Never attempt to make any repairs to the wheel.

EAM30246

CHECKING THE WHEEL BEARINGS

1. Check:
   - Wheel bearing
     Refer to "CHECKING THE FRONT WHEEL" on page 4-5 and "CHECKING THE REAR WHEEL" on page 4-10.

EAM30253

CHECKING THE CHASSIS FASTENERS

Make sure that all nuts, bolts, and screws are properly tightened.
Refer to "CHASSIS TIGHTENING TORQUES" on page 2-12.

EAM30248

CHECKING AND LUBRICATING THE CABLES

The following procedure applies to all of the inner and outer cables.

EWA13270

WARNING

Damaged outer cable may cause the cable to corrode and interfere with its movement. Replace damaged outer cable and inner cables as soon as possible.

1. Check:
   - Outer cable

Damage → Replace.

2. Check:
   - Cable operation
     Rough movement → Lubricate.

	Recommended lubricant **Engine oil or a suitable cable lubricant**

TIP

Hold the cable end upright and pour a few drops of lubricant into the cable sheath or use a suitable lubricating device.

EAM30483

LUBRICATING THE BRAKE LEVER

1. Lubricate the pivoting points and metal-to-metal moving parts of the following parts.
   - Brake lever

	Recommended lubricant **Silicone grease**

EAM30503

LUBRICATING THE CLUTCH LEVER

1. Lubricate the pivoting points and metal-to-metal moving parts of the following parts.
   - Clutch lever

	Recommended lubricant **Lithium-soap-based grease**

EAM30250

LUBRICATING THE PEDAL

1. Lubricate the pivoting point and metal-to-metal moving parts of the pedal.

	Recommended lubricant **Lithium-soap-based grease**

EAM20137

ELECTRICAL SYSTEM

EAM30255

CHECKING THE IGNITION TIMING

1. Remove:
   - Fuel tank
     Refer to “FUEL TANK” on page 7-1.
   - Spark plug
   - Crankcase cover (left)
2. Attach:
   - Dial gauge “1”
   - Spark plug hole dial stand “2”

	Dial gauge set **90890-03238** **YU-03097-B**

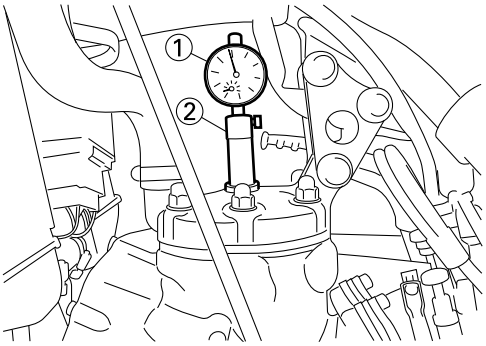

3. Rotate the magneto rotor “1” until the piston reaches top dead center (TDC). When this happens, the needle on the dial gauge will stop and reverse directions even though the rotor is being turned in the same direction.

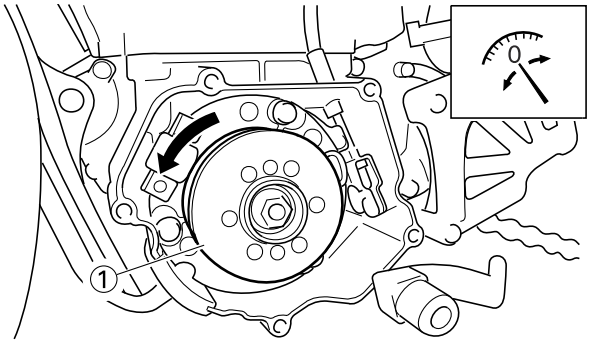

4. Set the dial gauge to zero at TDC.
5. From TDC, rotate the rotor clockwise until the dial gauge indicates that the piston is at a specified distance from TDC.

	Ignition timing (B.T.D.C.) **0.18 mm (0.01 in)**

6. Check:
   - Ignition timing
     Punch mark “a” on rotor should be aligned with punch mark “b” on stator.
     Not aligned → Adjust.

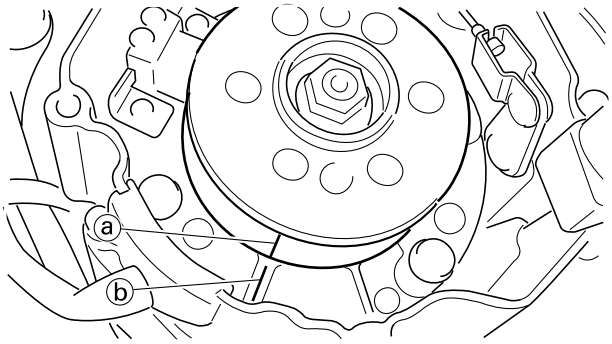

7. Adjust:
   - Ignition timing
     a. Loosen the stator coil screws “1”.
     b. Align the punch mark on the rotor with punch mark on the stator “2” by moving the stator.
     c. Tighten the stator coil screws.

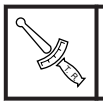	**Stator coil screw** **7 N·m (0.7 kgf·m, 5.2 lb·ft)**

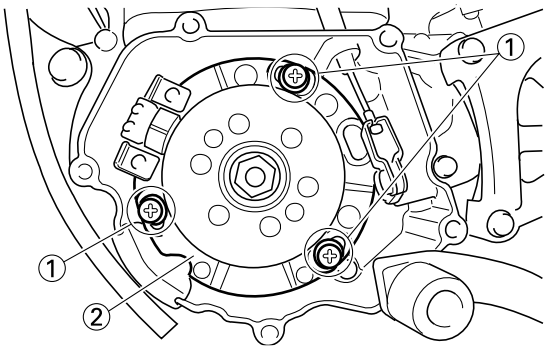

CHASSIS

GENERAL CHASSIS.....4-1
REMOVING THE NUMBER PLATE.....4-2
REMOVING THE SIDE COVER.....4-2

FRONT WHEEL.....4-3
REMOVING THE FRONT WHEEL.....4-5
DISASSEMBLING THE FRONT WHEEL.....4-5
CHECKING THE FRONT WHEEL.....4-5
ASSEMBLING THE FRONT WHEEL.....4-5
INSTALLING THE FRONT WHEEL.....4-6

REAR WHEEL.....4-8
REMOVING THE REAR WHEEL.....4-10
DISASSEMBLING THE REAR WHEEL.....4-10
CHECKING THE REAR WHEEL.....4-10
CHECKING AND REPLACING THE REAR WHEEL SPROCKET.....4-10
ASSEMBLING THE REAR WHEEL.....4-11
INSTALLING THE REAR WHEEL.....4-11

FRONT BRAKE.....4-13
INTRODUCTION.....4-17
CHECKING THE FRONT BRAKE DISC.....4-17
REPLACING THE FRONT BRAKE PADS.....4-17
REMOVING THE FRONT BRAKE CALIPER.....4-19
DISASSEMBLING THE FRONT BRAKE CALIPER.....4-19
CHECKING THE FRONT BRAKE CALIPER.....4-19
ASSEMBLING THE FRONT BRAKE CALIPER.....4-19
INSTALLING THE FRONT BRAKE CALIPER.....4-20
REMOVING THE FRONT BRAKE MASTER CYLINDER.....4-21
CHECKING THE FRONT BRAKE MASTER CYLINDER.....4-21
ASSEMBLING THE FRONT BRAKE MASTER CYLINDER.....4-21
INSTALLING THE FRONT BRAKE MASTER CYLINDER.....4-22

REAR BRAKE.....4-24
INTRODUCTION.....4-29
CHECKING THE REAR BRAKE DISC.....4-29
REPLACING THE REAR BRAKE PADS.....4-29
REMOVING THE REAR BRAKE CALIPER.....4-31
DISASSEMBLING THE REAR BRAKE CALIPER.....4-31
CHECKING THE REAR BRAKE CALIPER.....4-31
ASSEMBLING THE REAR BRAKE CALIPER.....4-31
INSTALLING THE REAR BRAKE CALIPER.....4-32
REMOVING THE REAR BRAKE MASTER CYLINDER.....4-32
CHECKING THE REAR BRAKE MASTER CYLINDER.....4-33
ASSEMBLING THE REAR BRAKE MASTER CYLINDER.....4-33
INSTALLING THE REAR BRAKE MASTER CYLINDER.....4-34

HANDLEBAR..... 4-35
REMOVING THE HANDLEBAR..... 4-38
CHECKING THE HANDLEBAR..... 4-38
INSTALLING THE HANDLEBAR..... 4-38

FRONT FORK..... 4-43
REMOVING THE FRONT FORK LEGS..... 4-45
DISASSEMBLING THE FRONT FORK LEGS..... 4-45
CHECKING THE FRONT FORK LEGS..... 4-46
ASSEMBLING THE FRONT FORK LEGS..... 4-47
INSTALLING THE FRONT FORK LEGS..... 4-53

STEERING HEAD..... 4-55
REMOVING THE LOWER BRACKET..... 4-58
CHECKING THE STEERING HEAD..... 4-58
INSTALLING THE STEERING HEAD..... 4-58

REAR SHOCK ABSORBER ASSEMBLY..... 4-61
HANDLING THE REAR SHOCK ABSORBER..... 4-64
DISPOSING OF A REAR SHOCK ABSORBER..... 4-64
REMOVING THE REAR SHOCK ABSORBER ASSEMBLY..... 4-64
CHECKING THE REAR SHOCK ABSORBER ASSEMBLY..... 4-64
CHECKING THE CONNECTING ARM AND RELAY ARM..... 4-64
INSTALLING THE RELAY ARM..... 4-65
INSTALLING THE CONNECTING ARM..... 4-65
INSTALLING THE REAR SHOCK ABSORBER ASSEMBLY..... 4-65

SWINGARM..... 4-68
REMOVING THE SWINGARM..... 4-70
CHECKING THE SWINGARM..... 4-70
INSTALLING THE SWINGARM..... 4-70

CHAIN DRIVE..... 4-72
REMOVING THE DRIVE CHAIN..... 4-73
CHECKING THE DRIVE CHAIN..... 4-73
CHECKING THE DRIVE SPROCKET..... 4-74
CHECKING THE REAR WHEEL SPROCKET..... 4-74
INSTALLING THE DRIVE CHAIN..... 4-74

EAM20094

GENERAL CHASSIS

Removing the seat and side cover

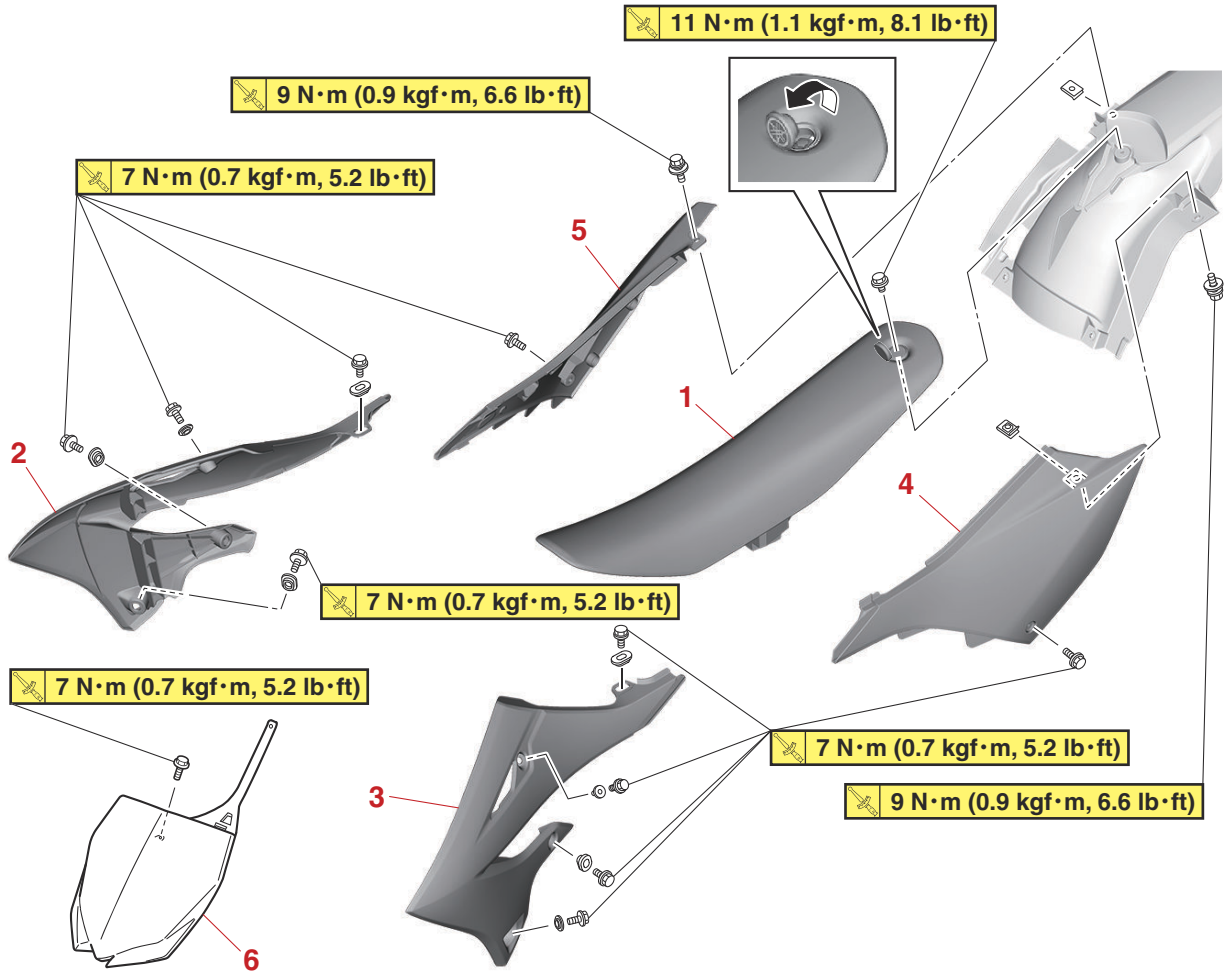

Order	Job/Parts to remove	Q'ty	Remarks
1	Seat	1	
2	Air scoop (right)	1	
3	Air scoop (left)	1	
4	Side cover (left)	1	
5	Side cover (right)	1	
6	Number plate	1	

EAM30371

REMOVING THE NUMBER PLATE

1. Remove:
   - Number plate bolt
   - Number plate “1”

TIP

- The projection “a” is inserted into the band of the number plate. Pull the band off the projection before removal.
- Remove the clutch cable “2” from the cable guide “b” on the number plate.
- The projection “c” on the lower bracket is inserted into the number plate. Remove the number plate by pulling it off the projection.
- When installing the number plate, insert the projection on the number plate into the hole in the upper side of the band.

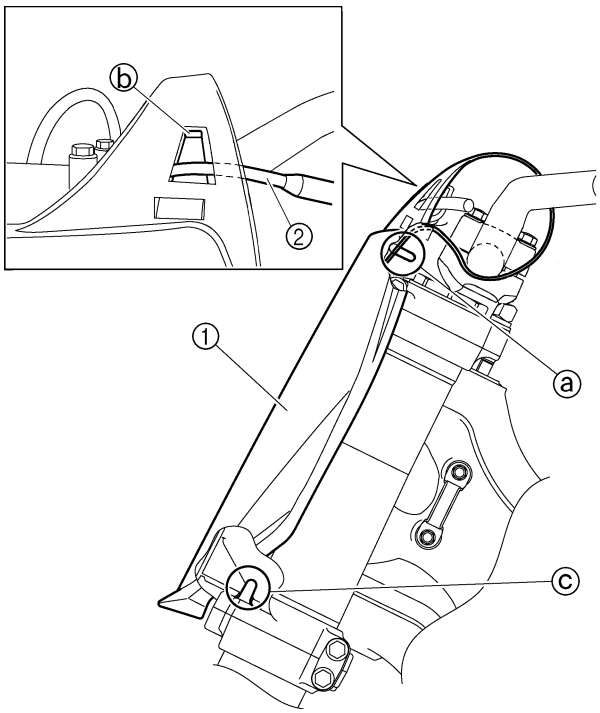

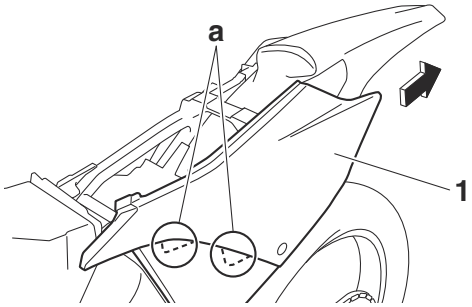

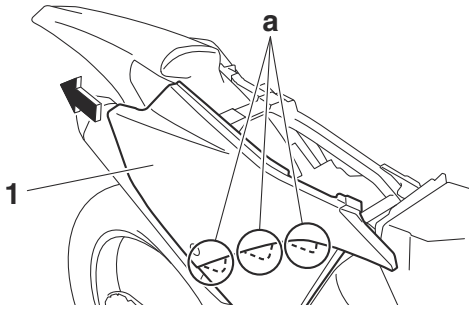

EAM30459

REMOVING THE SIDE COVER

1. Remove:
   - Side cover bolt
   - Side cover (left/right) “1”

TIP

Draw the side cover backward to remove it because its claws “a” are inserted in the air filter case.

EAM20095

FRONT WHEEL

Removing the front wheel

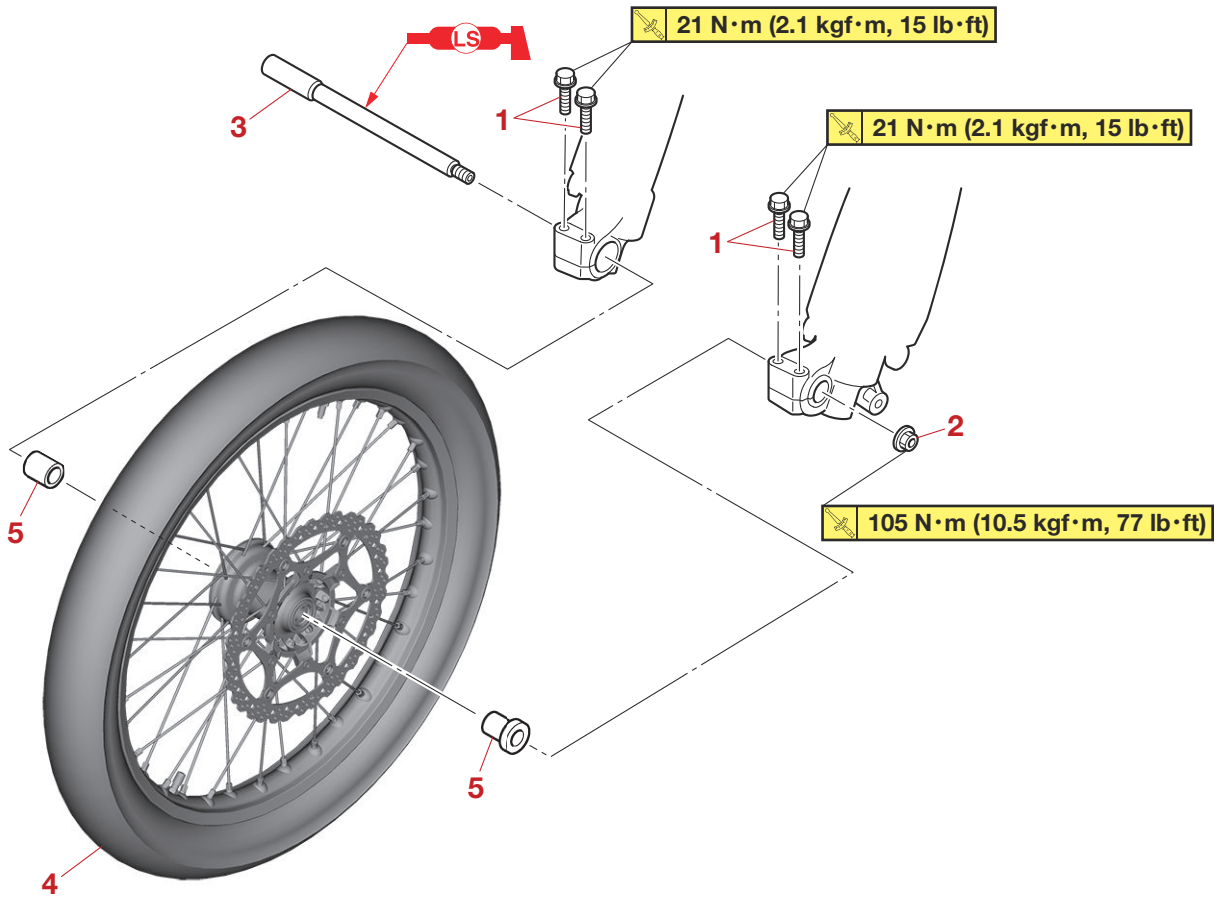

Order	Job/Parts to remove	Q'ty	Remarks
			Use a maintenance stand to raise the front wheel off the ground.
1	Front wheel axle pinch bolt	4	Loosen.
2	Front wheel axle nut	1	
3	Front wheel axle	1	
4	Front wheel	1	
5	Collar	2	

Disassembling the front wheel

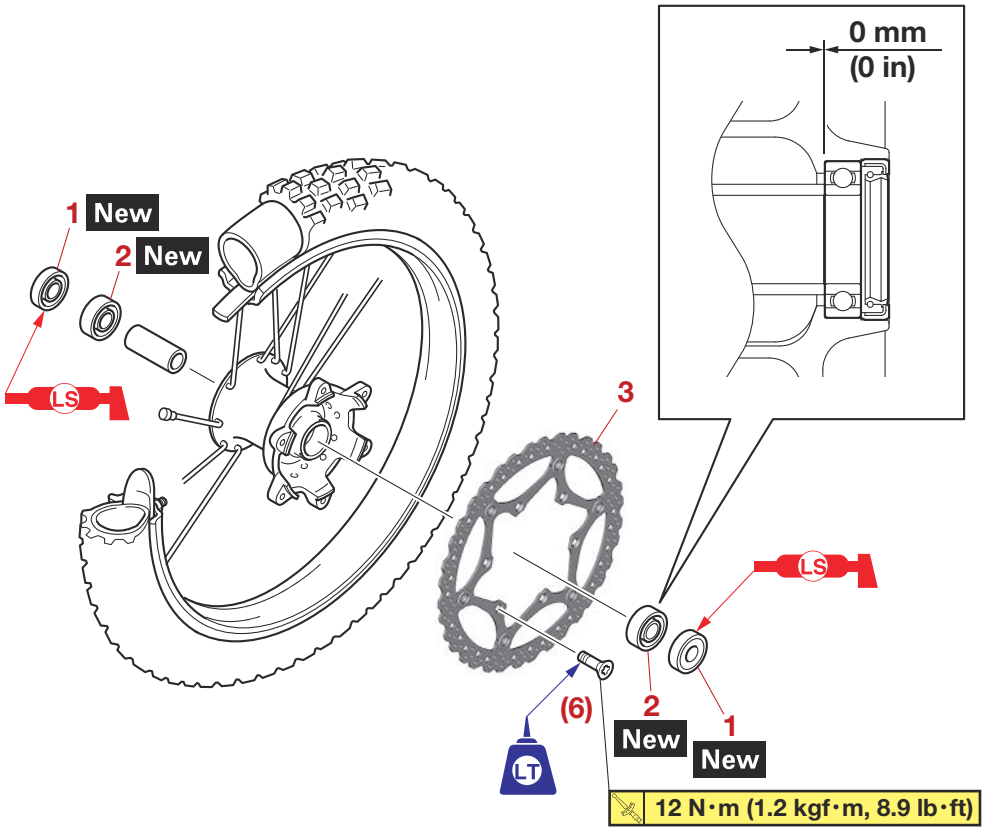

Order	Job/Parts to remove	Q'ty	Remarks
1	Oil seal	2	
2	Bearing	2	
3	Brake disc	1	

EAM30017

REMOVING THE FRONT WHEEL

1. Use a maintenance stand to raise the front wheel off the ground.

EWA13120

WARNING

Securely support the vehicle so that there is no danger of it falling over.

2. Remove:
   - Front wheel

EAM30019

DISASSEMBLING THE FRONT WHEEL

1. Remove:
   - Oil seal
   - Bearing
     a. Clean the outside of the front wheel hub.
     b. Remove the oil seals "1" with a flat-head screwdriver.

TIP

To prevent damaging the wheel, place a rag "2" between the screwdriver and the wheel surface.

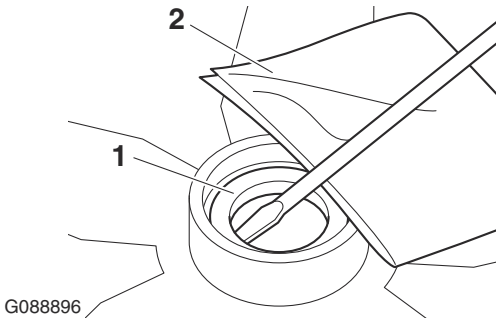

     c. Remove the bearings with a bearing puller.

EAM30018

CHECKING THE FRONT WHEEL

1. Check:
   - Front wheel axle
     Roll the front wheel axle on a flat surface.
     Bends → Replace.

EWA13460

WARNING

Do not attempt to straighten a bent wheel axle.

2. Check:
   - Tire
   - Front wheel
     Damage/wear → Replace.
     Refer to "CHECKING THE TIRES" on page 3-23 and "CHECKING THE WHEELS" on page 3-24.
3. Check:
   - Spoke
     Refer to "CHECKING AND TIGHTENING THE SPOKES" on page 3-24.
4. Tighten:
   - Spoke
     Refer to "CHECKING AND TIGHTENING THE SPOKES" on page 3-24.

	Nipple (spoke) **2.5 N·m (0.25 kgf·m, 1.8 lb·ft)**

TIP

After tightening the spokes, measure the wheel runout.

5. Measure:
   - Radial wheel runout "1"
   - Lateral wheel runout "2"
     Out of specification → Repair/replace.

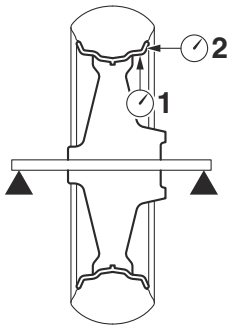

	Radial wheel runout limit **2.0 mm (0.08 in)** **Lateral wheel runout limit** **2.0 mm (0.08 in)**

6. Check:
   - Collar
     Damage/wear → Replace.
7. Check:
   - Bearing
     Front wheel turns roughly or is loose → Replace the wheel bearings.
   - Oil seal
     Damage/wear → Replace.

EAM30020

ASSEMBLING THE FRONT WHEEL

1. Install:
   - Bearing (left side) "1" New
   - Spacer "2"
   - Bearing (right side) "3" New
   - Oil seal "4" New

TIP

- Apply the lithium-soap-based grease to the oil seal lip when installing.
- Left side of bearing shall be installed first.
- Install the oil seal with its manufacture's marks

or numbers facing outward.

ECA24420

NOTICE

Install the bearing by pressing its outer race parallel.

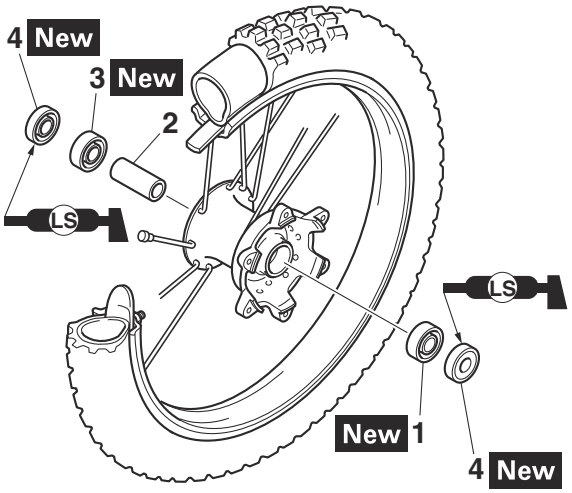

ECA18110

NOTICE

Do not contact the wheel bearing inner race "1" or balls "2". Contact should be made only with the outer race "3".

TIP

Use a socket "4" that matches the diameter of the bearing outer race and that of the oil seal.

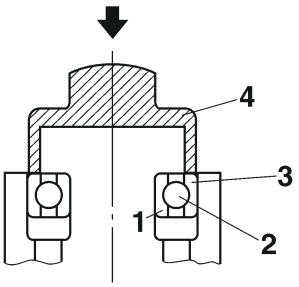

G088898

2. Install:
   - Brake disc
   - Front brake disc bolt

	Front brake disc bolt **12 N·m (1.2 kgf·m, 8.9 lb·ft)** **LOCTITE®**

TIP

Tighten the bolts in stages and in a crisscross pattern.

3. Install:
   - Collar "1"

TIP

- Apply the lithium-soap-based grease on the oil seal lip.
- Install the collars with their projections "a" facing the wheel.

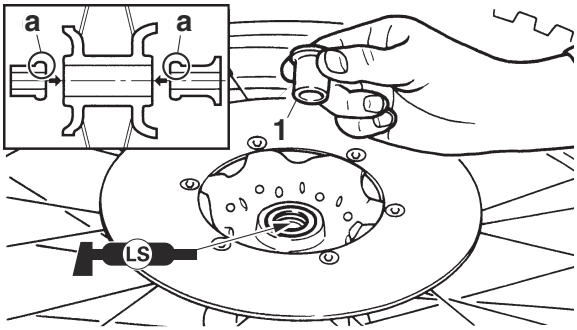

EAM30617

INSTALLING THE FRONT WHEEL

1. Install:
   - Front wheel

TIP

Install the brake disc "1" between the brake pads "2" correctly.

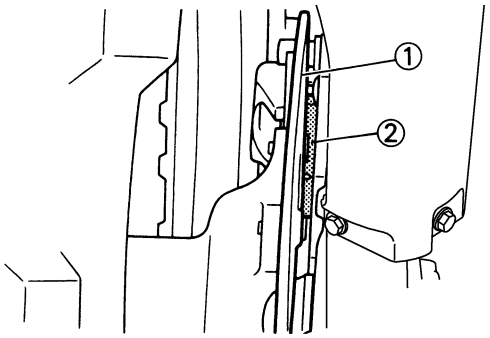

2. Install:
   - Front wheel axle "1"

TIP

Apply the lithium-soap-based grease to the front wheel axle.

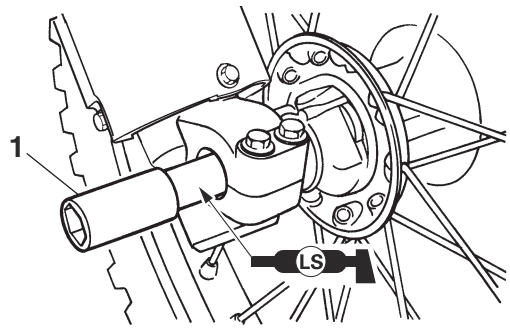

3. Tighten:
   - Front wheel axle nut “1”

	Front wheel axle nut **105 N·m (10.5 kgf·m, 77 lb·ft)**

ECA24430

NOTICE

Before tightening the front wheel axle nut, push down hard on the handlebar(s) several times and check if the front fork rebounds smoothly.

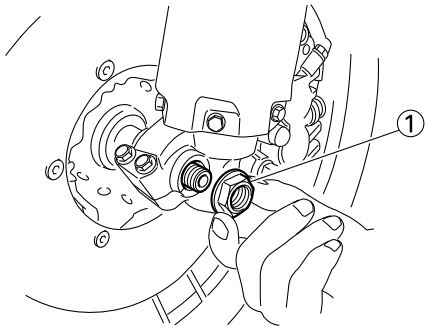

4. Tighten:
   - Front wheel axle pinch bolt “1”

	Front wheel axle pinch bolt **21 N·m (2.1 kgf·m, 15 lb·ft)**

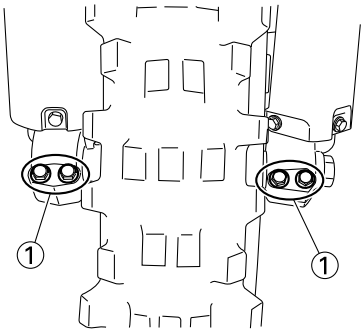

EAM20096

REAR WHEEL

Removing the rear wheel

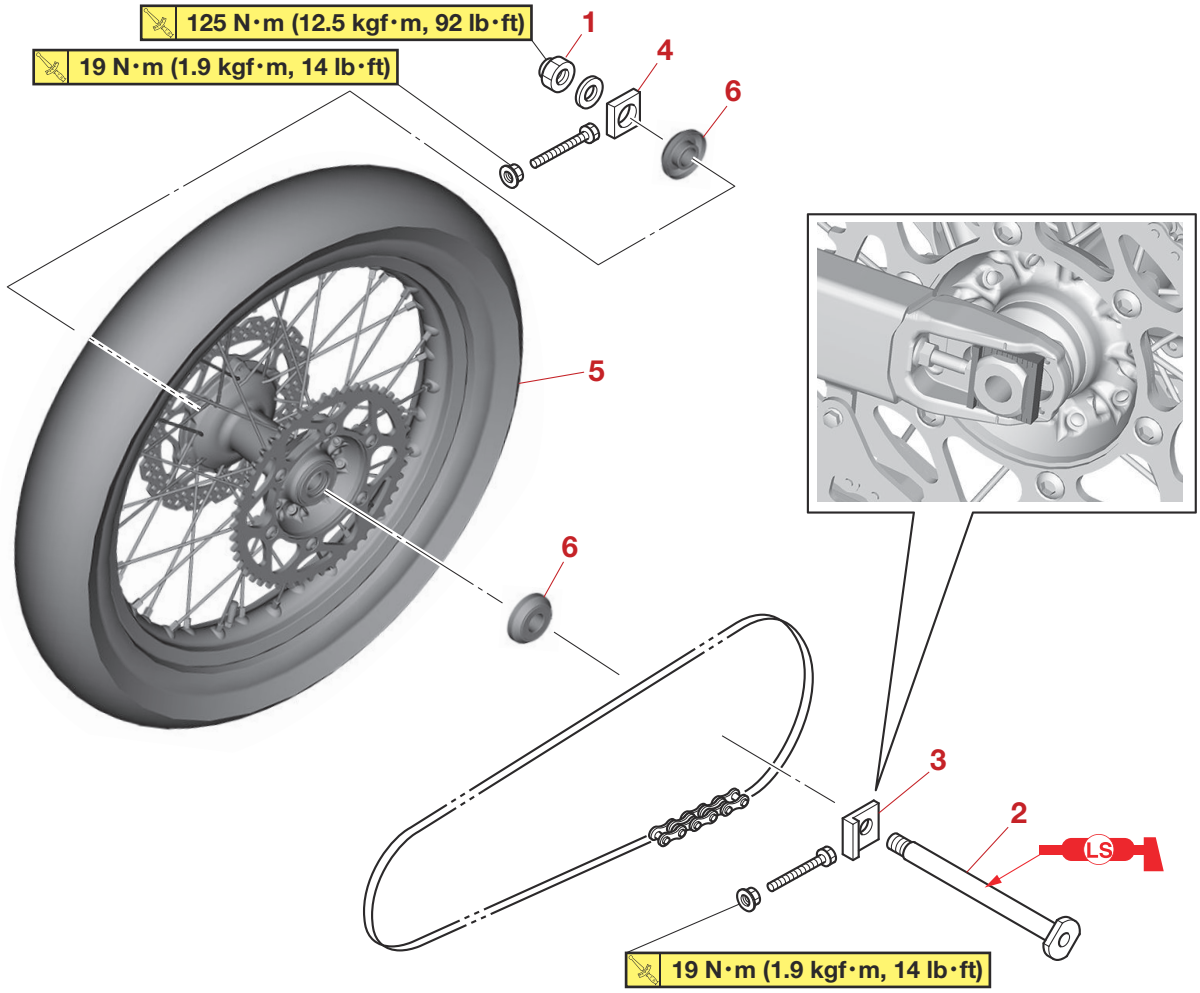

Order	Job/Parts to remove	Q'ty	Remarks
			Use a maintenance stand to raise the rear wheel off the ground.
1	Rear wheel axle nut	1	
2	Rear wheel axle	1	
3	Drive chain puller (left)	1	
4	Drive chain puller (right)	1	
5	Rear wheel	1	
6	Collar	2	

Disassembling the rear wheel

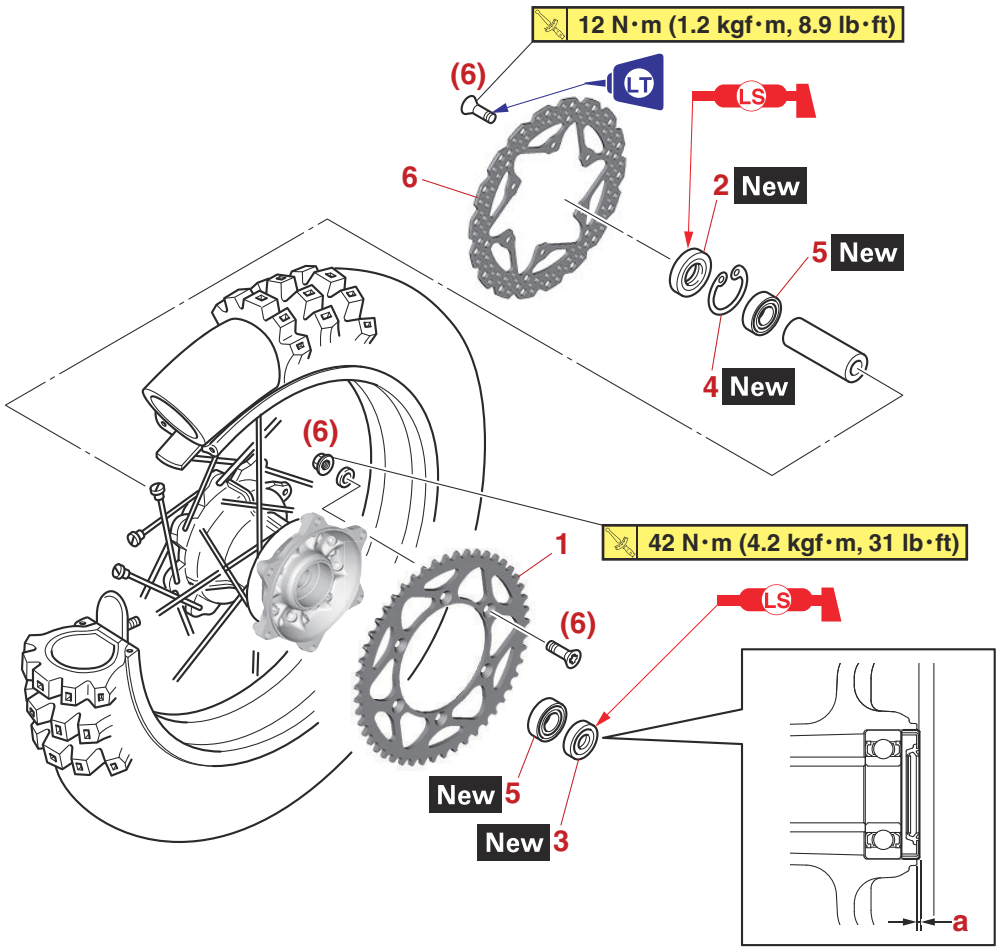

Order	Job/Parts to remove	Q'ty	Remarks
1	Rear wheel sprocket	1	
2	Oil seal	1	
3	Oil seal	1	["a" = Approx. 1.0 mm (0.04 in)]
4	Circlip	1	
5	Bearing	2	
6	Brake disc	1	

EAM30022

REMOVING THE REAR WHEEL

1. Use a maintenance stand to raise the rear wheel off the ground.

EWA13120

WARNING

Securely support the vehicle so that there is no danger of it falling over.

2. Remove:
   - Rear wheel axle nut "1"
3. Loosen:
   - Locknut "2"
4. Tighten:
   - Adjusting bolt "3"

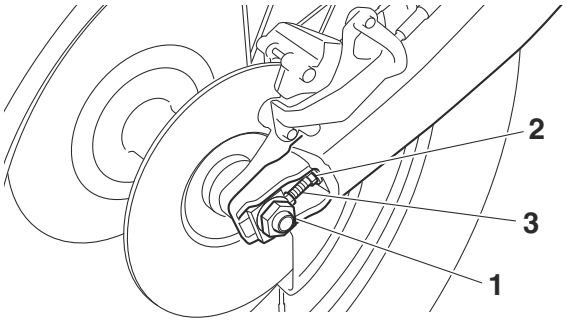

5. Remove:
   - Rear wheel axle
   - Rear wheel

TIP

- Push the rear wheel forward and remove the drive chain from the rear wheel sprocket.
- Do not depress the brake pedal with the rear wheel removed.

EAM30024

DISASSEMBLING THE REAR WHEEL

1. Remove:
   - Oil seal
   - Bearing
   Refer to "DISASSEMBLING THE FRONT WHEEL" on page 4-5.

EAM30023

CHECKING THE REAR WHEEL

1. Check:
   - Rear wheel axle
   - Rear wheel
   - Bearing
   - Oil seal
   Refer to "CHECKING THE FRONT WHEEL" on page 4-5.
2. Check:
   - Tire
   - Rear wheel
   Damage/wear → Replace.
   Refer to "CHECKING THE TIRES" on page 3-23 and "CHECKING THE WHEELS" on page 3-24.
3. Check:
   - Spoke
   Refer to "CHECKING AND TIGHTENING THE SPOKES" on page 3-24.
4. Measure:
   - Radial wheel runout
   - Lateral wheel runout
   Refer to "CHECKING THE FRONT WHEEL" on page 4-5.

Radial wheel runout limit
2.0 mm (0.08 in)
Lateral wheel runout limit
2.0 mm (0.08 in)

EAM30025

CHECKING AND REPLACING THE REAR WHEEL SPROCKET

1. Check:
   - Rear wheel sprocket
   More than 1/4 tooth wear "a" → Replace the rear wheel sprocket and the drive sprocket as a set.
   Bent tooth → Replace the rear wheel sprocket and the drive sprocket as a set.

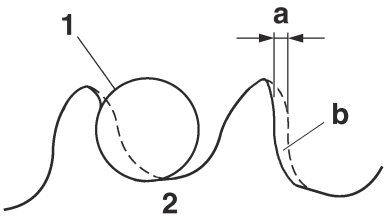

G088904

b. Correct

1. Drive chain roller
2. Rear wheel sprocket

2. Replace:
   - Rear wheel sprocket
   a. Remove the self-locking nuts and the rear wheel sprocket.
   b. Clean the rear wheel drive hub with a clean cloth, especially the surfaces that contact the sprocket.
   c. Install the new rear wheel sprocket.

Rear wheel sprocket self-locking nut
42 N·m (4.2 kgf·m, 31 lb·ft)

TIP

Tighten the self-locking nuts in stages and in a crisscross pattern.

EAM30026

ASSEMBLING THE REAR WHEEL

1. Install:
   - Bearing (right side) "1" New
   - Circlip "2" New
   - Spacer "3"
   - Bearing (left side) "4" New
   - Oil seal "5" New

TIP

- Apply the lithium-soap-based grease to the oil seal lip when installing.
- Right side of bearing shall be installed first.
- Install the oil seal with its manufacture's marks or numbers facing outward.

ECA24440

NOTICE

Install the bearing by pressing its outer race parallel.

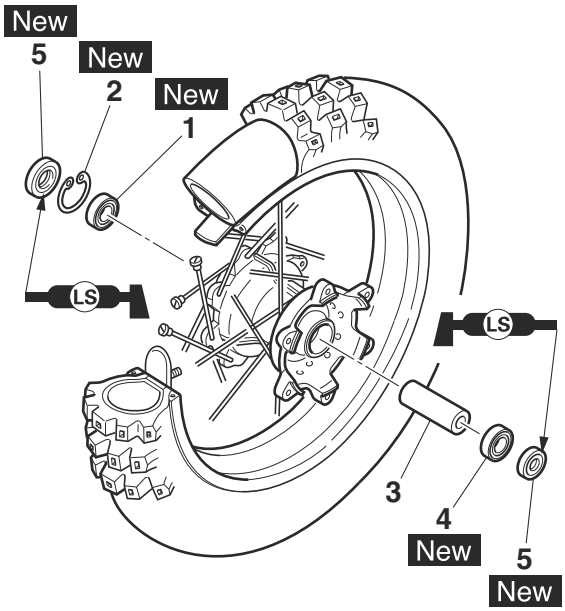

ECA18110

NOTICE

Do not contact the wheel bearing inner race "1" or balls "2". Contact should be made only with the outer race "3".

TIP

Use a socket "4" that matches the diameter of the bearing outer race and that of the oil seal.

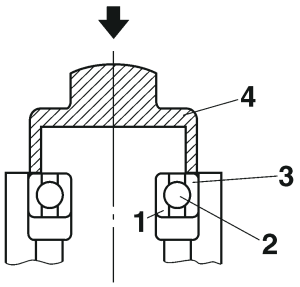

G088898

2. Install:
   - Brake disc
   - Rear brake disc bolt

	Rear brake disc bolt **12 N·m (1.2 kgf·m, 8.9 lb·ft)** **LOCTITE®**

TIP

Tighten the bolts in stages and in a crisscross pattern.

3. Install:
   - Collar "1"

TIP

Apply the lithium-soap-based grease on the oil seal lip.

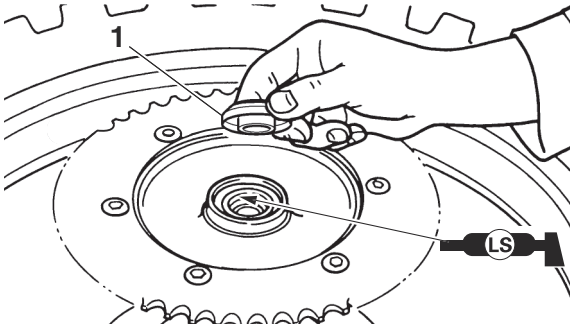

EAM30027

INSTALLING THE REAR WHEEL

1. Install:
   - Rear wheel

TIP

Install the brake disc "1" between the brake pads "2" correctly.

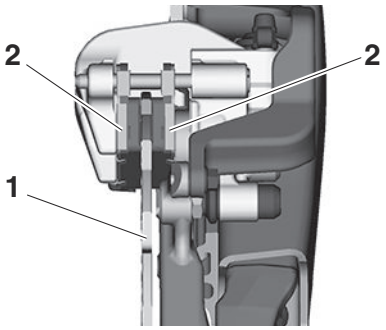

2. Install:
   - Drive chain "1"

TIP

Push the rear wheel "2" forward and install the drive chain.

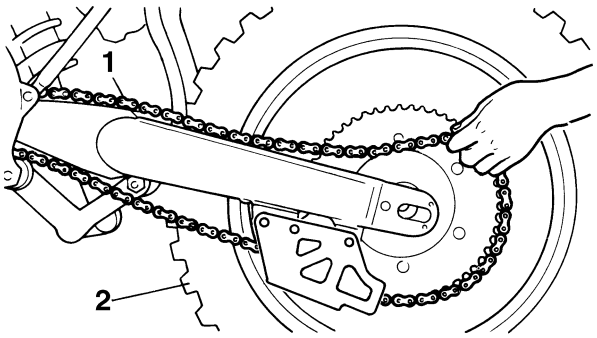

3. Install:
   - Drive chain puller (left) "1"
   - Rear wheel axle "2"

TIP

- Install the drive chain puller (left), and insert the rear wheel axle from the left side.
- Apply the lithium-soap-based grease to the rear wheel axle.

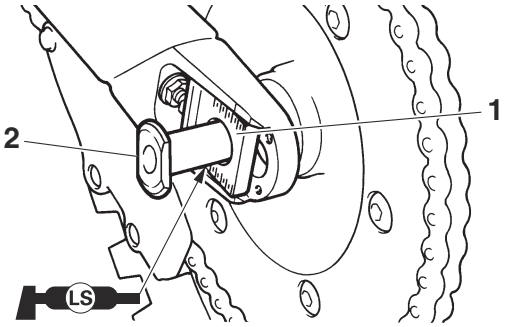

4. Install:
   - Drive chain puller (right) "1"
   - Washer "2"
   - Rear wheel axle nut "3"

TIP

Temporarily tighten the rear wheel axle nut at this point.

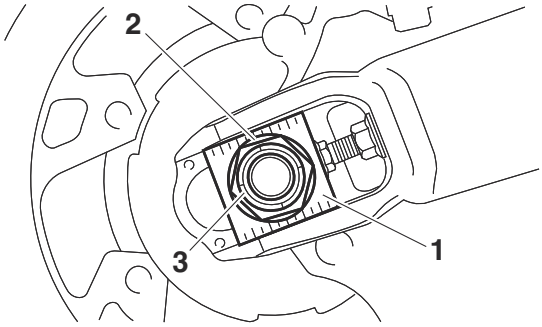

5. Adjust:
   - Drive chain slack "a"

	Drive chain slack (Maintenance Stand) **48.0–58.0 mm (1.89–2.28 in)**

Refer to "DRIVE CHAIN SLACK" on page 3-17.

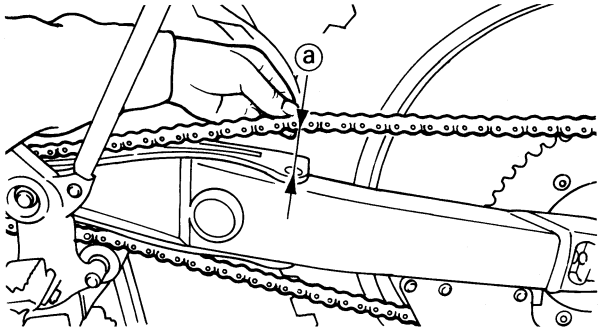

6. Tighten:
   - Rear wheel axle nut "1"

	Rear wheel axle nut **125 N·m (12.5 kgf·m, 92 lb·ft)**

   - Locknut "2"

	Drive chain puller locknut **19 N·m (1.9 kgf·m, 14 lb·ft)**

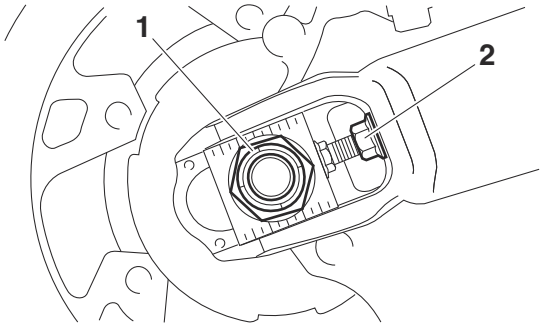

EAM20097

FRONT BRAKE

Removing the front brake caliper

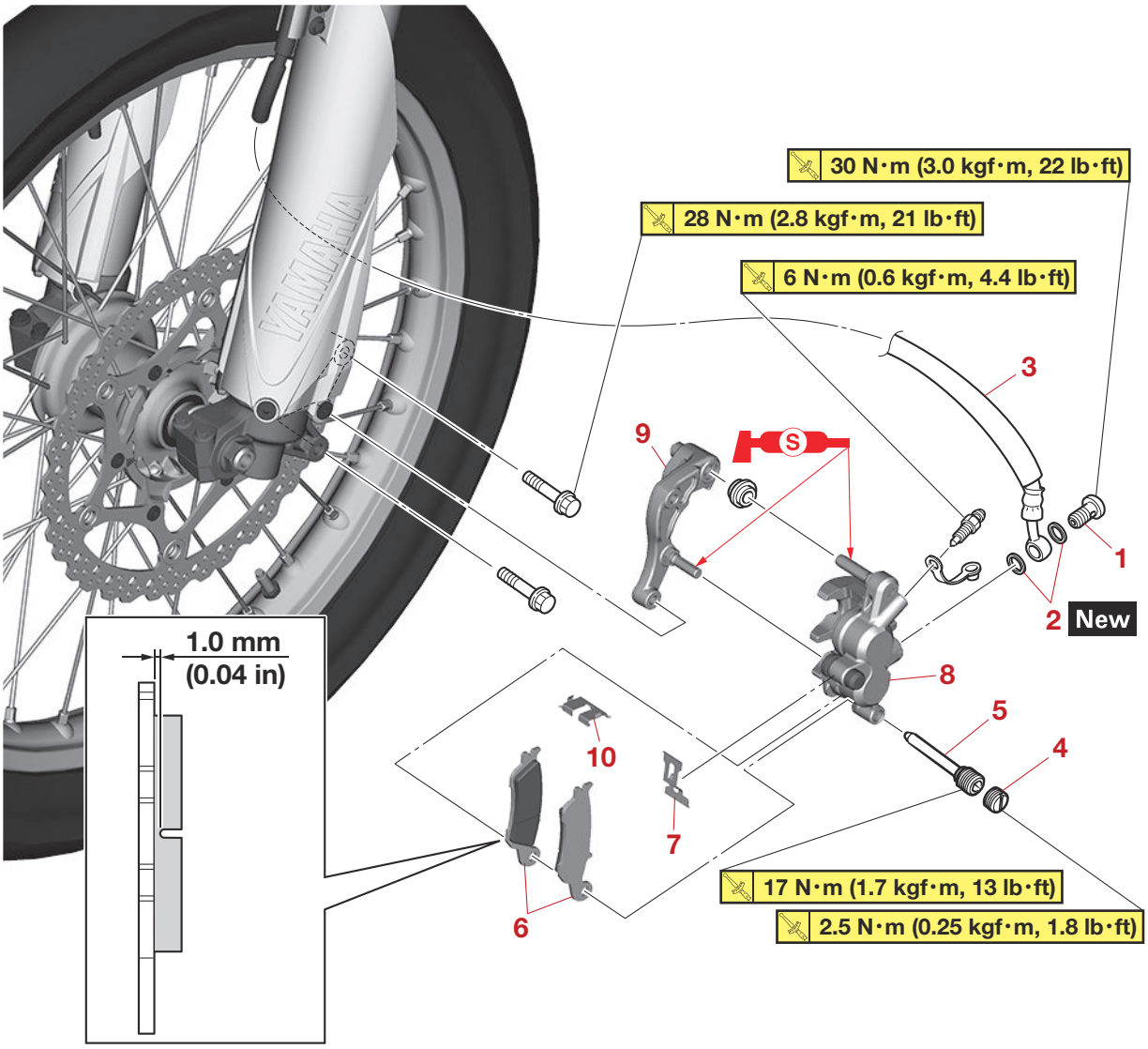

Order	Job/Parts to remove	Q'ty	Remarks
	Brake fluid		Drain. Refer to "BLEEDING THE HYDRAULIC BRAKE SYSTEM" on page 3-16.
1	Union bolt	1	
2	Copper washer	2	
3	Front brake hose	1	
4	Brake pad pin plug	1	
5	Brake pad pin	1	
6	Brake pad	2	
7	Brake pad spring	1	
8	Front brake caliper assembly	1	
9	Front brake caliper bracket	1	
10	Brake pad spring	1	

Disassembling the front brake caliper

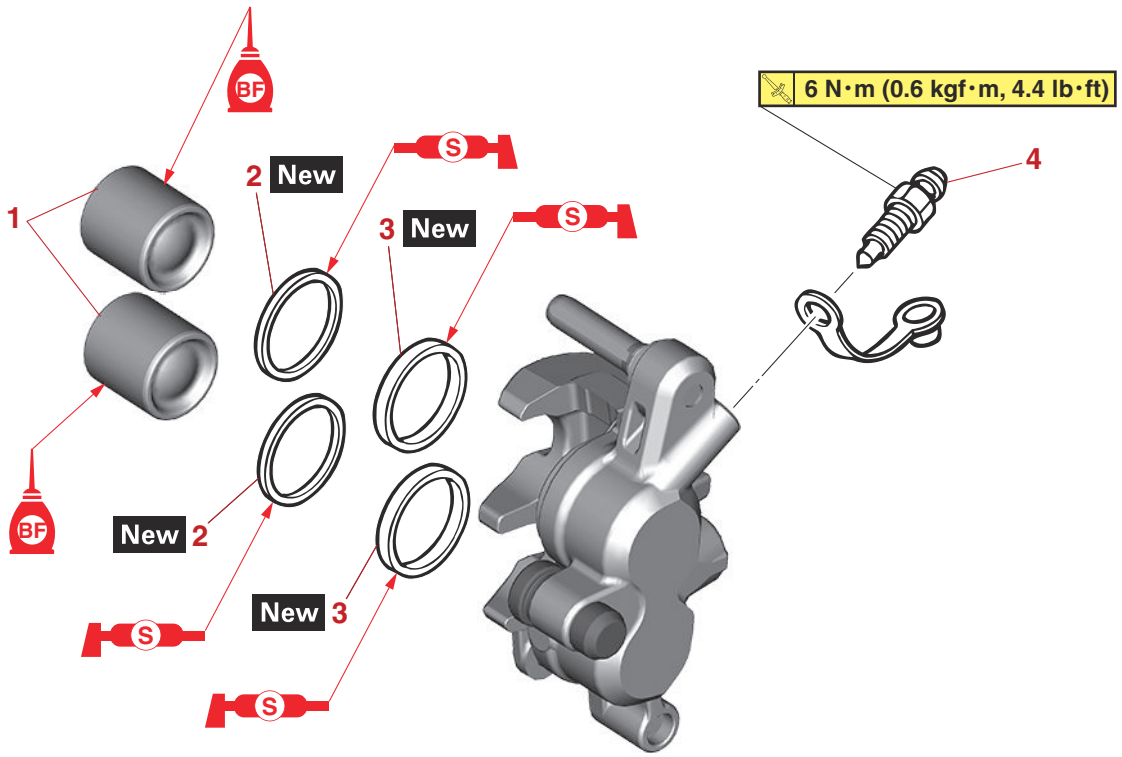

Order	Job/Parts to remove	Q'ty	Remarks
1	Brake caliper piston	2	
2	Brake caliper piston dust seal	2	
3	Brake caliper piston seal	2	
4	Bleed screw	1	

Removing the front brake master cylinder

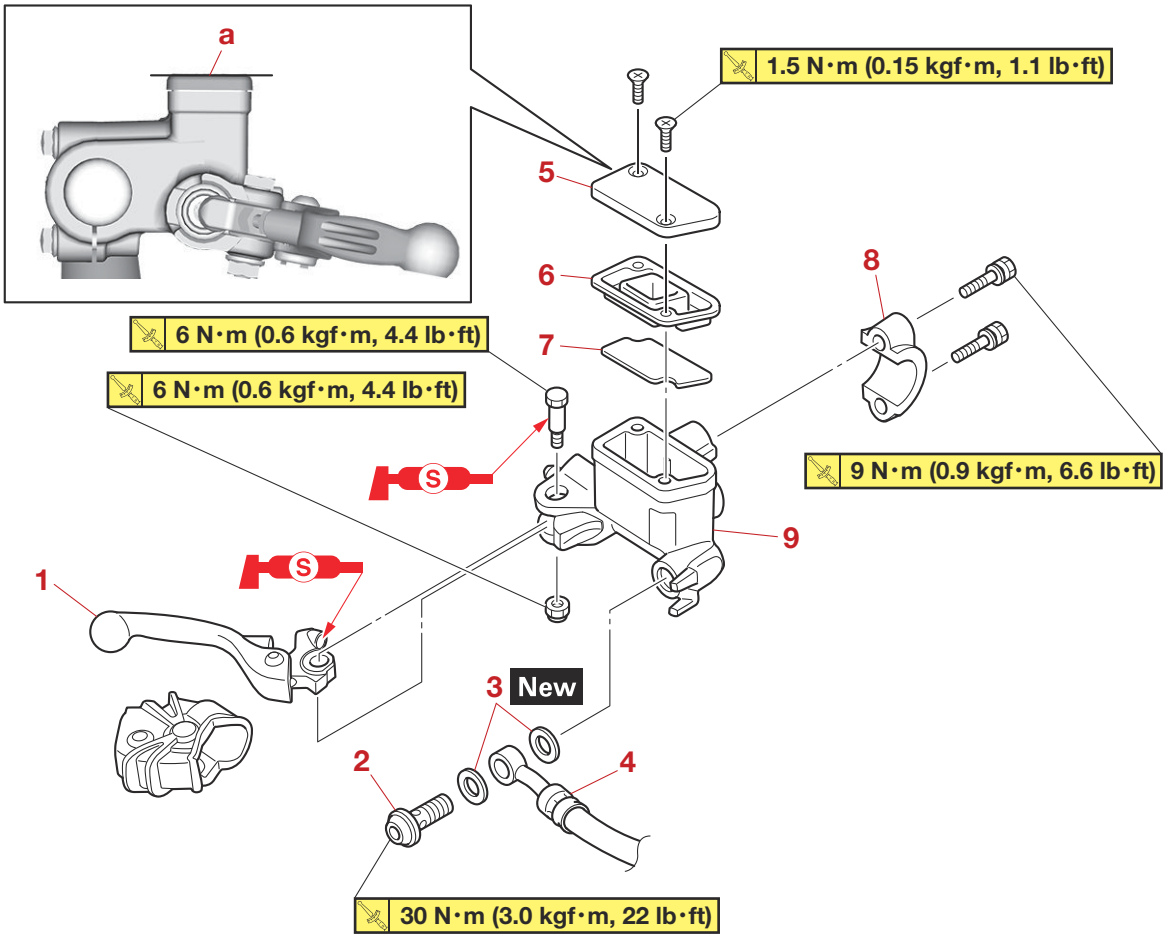

Order	Job/Parts to remove	Q'ty	Remarks
	Brake fluid		Drain. Refer to "BLEEDING THE HYDRAULIC BRAKE SYSTEM" on page 3-16.
1	Brake lever	1	
2	Union bolt	1	
3	Copper washer	2	
4	Front brake hose	1	
5	Brake master cylinder reservoir cap	1	Adjust the front brake master cylinder so that the top "a" of the brake master cylinder reservoir cap is horizontal.
6	Brake master cylinder reservoir diaphragm	1	
7	Front brake master cylinder float	1	
8	Front brake master cylinder holder	1	
9	Front brake master cylinder	1	

Disassembling the front brake master cylinder

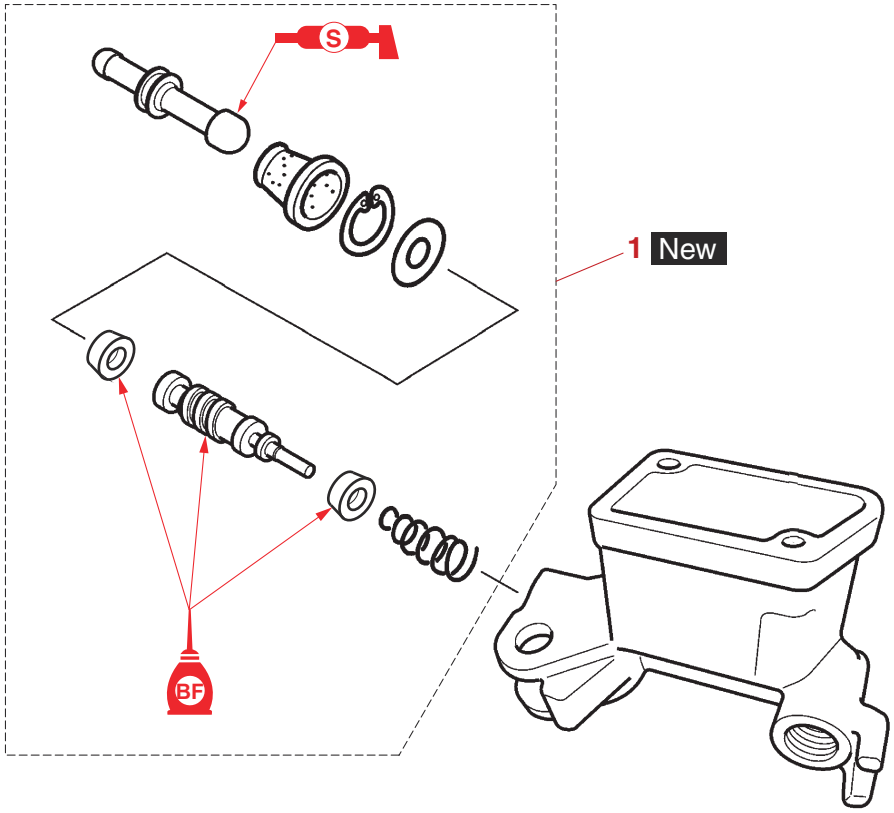

Order	Job/Parts to remove	Q'ty	Remarks
1	Brake master cylinder kit	1	

EAM30028

INTRODUCTION

EWA19210

WARNING

If you need to disassemble the disc brake components, observe the following precautions.

- **Never disassemble the brake components unless absolutely necessary.**
- **If there is any problem with connections on the hydraulic brake system, perform the following jobs. Disassemble the brake system, drain the brake fluid, and clean it. After that, add a suitable amount of brake fluid. Then, bleed it after reassembly.**
- **Use only brake fluid for washing brake components.**
- **Use new brake fluid for cleaning the brake components.**
- **Immediately wipe off the spilled brake fluid to avoid damage to painted surfaces or plastic parts.**
- **Handle brake fluid with special care not to let it enter your eyes so that you may not lost your eyesight.**
- **FIRST AID FOR BRAKE FLUID ENTERING THE EYES:**
- **Flush with water for 15 minutes and get immediate medical attention.**

EAM30029

CHECKING THE FRONT BRAKE DISC

1. Check:
   - Front brake disc
     Damage/galling → Replace.
2. Measure:
   - Brake disc thickness
     Measure the brake disc thickness at a few different locations.
     Out of specification → Replace.

	Brake disc thickness limit **2.5 mm (0.10 in)**

3. Measure:
   - Brake disc runout
     Out of specification → Replace the brake disc.

	Brake disc runout limit (as measured on wheel) **0.15 mm (0.0059 in)**

   a. Place the vehicle on a maintenance stand so that the front wheel is elevated.
   b. Remove the brake caliper.
   c. Hold the dial gauge at a right angle against the brake disc surface.
   d. Measure the runout 1.5 mm (0.06 in) above the brake disc edge.

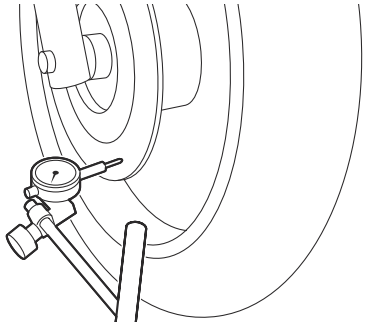

G098641

4. Replace:
   - Brake disc
     Refer to "ASSEMBLING THE FRONT WHEEL" on page 4-5.

EAM30519

REPLACING THE FRONT BRAKE PADS

TIP

When replacing the brake pads, it is not necessary to disconnect the brake hose or disassemble the brake caliper.

1. Remove:
   - Brake pad
     a. Remove the pad pin plug "1".

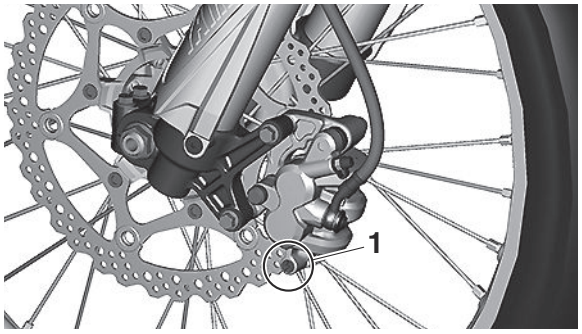

   b. Loosen the pad pin "2".
   c. Remove the brake caliper "3" from the front fork.

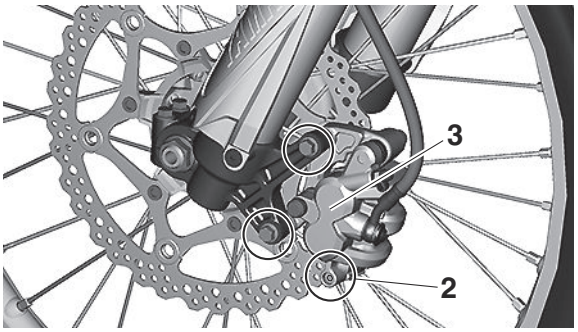

d. Remove the pad pin and brake pads “4”.

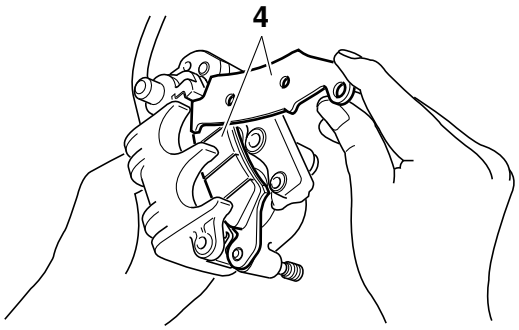

2. Measure:
   - Brake pad wear limit “a”
     Out of specification → Replace the brake pads as a set.

	Brake pad lining thickness limit **1.0 mm (0.04 in)**

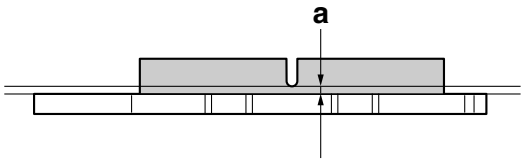

3. Install:
   - Brake pad
     a. Connect the plastic hose “1” to the bleed screw “2” and place a container under the end of the plastic hose.
     b. Loosen the bleed screw and push the brake caliper piston in.

EWA19160

WARNING

Do not reuse the drained brake fluid.

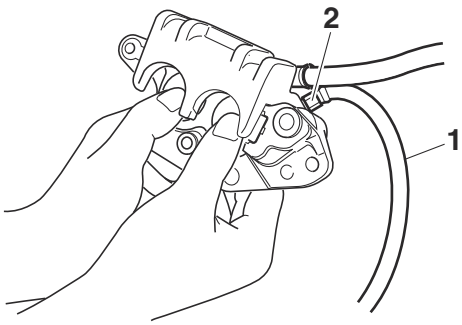

c. Tighten the bleed screw.

	Brake caliper bleed screw **6 N·m (0.6 kgf·m, 4.4 lb·ft)**

d. Install the brake pads “3” and the pad pin.

TIP

- Install the brake pads with their projections “a” into the brake caliper recesses “b”.
- Temporarily tighten the pad pin at this point.

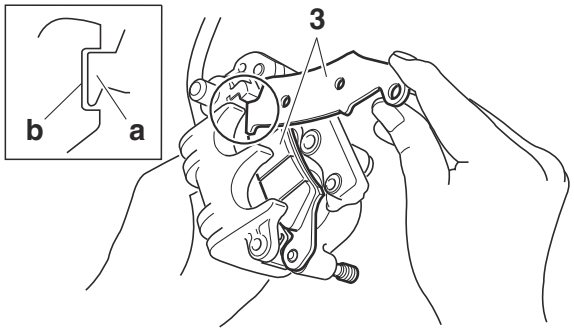

e. Install the brake caliper “4” and tighten the pad pin “5”.

	Front brake caliper bolt **28 N·m (2.8 kgf·m, 21 lb·ft)** **Brake pad pin** **17 N·m (1.7 kgf·m, 13 lb·ft)**

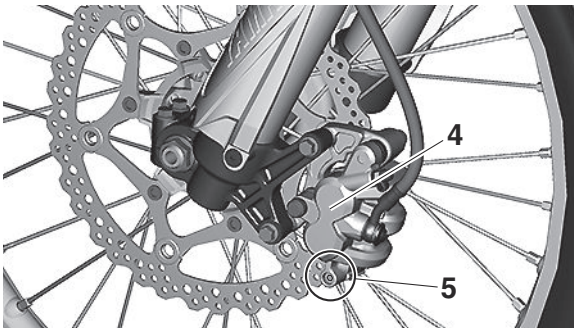

f. Install the pad pin plug “6”.

	Brake pad pin plug **2.5 N·m (0.25 kgf·m, 1.8 lb·ft)**

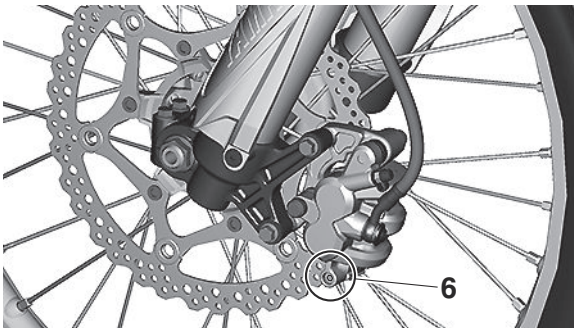

4. Check:
   - Brake fluid level
     Refer to “CHECKING THE BRAKE FLUID LEVEL” on page 3-15.

5. Check:
   - Brake lever operation
     A softy or spongy feeling → Bleed the brake system.
     Refer to "BLEEDING THE HYDRAULIC BRAKE SYSTEM" on page 3-16.

EAM30030

REMOVING THE FRONT BRAKE CALIPER

TIP

Before disassembling the brake caliper, drain the brake fluid from the entire brake system.

1. Remove:
   - Union bolt
   - Copper washer
   - Brake hose

TIP

Put the end of the brake hose into a container and pump out the brake fluid.

EAM30031

DISASSEMBLING THE FRONT BRAKE CALIPER

1. Remove:
   - Brake caliper piston "1"
   - Brake caliper piston dust seal "2"
   - Brake caliper piston seal "3"

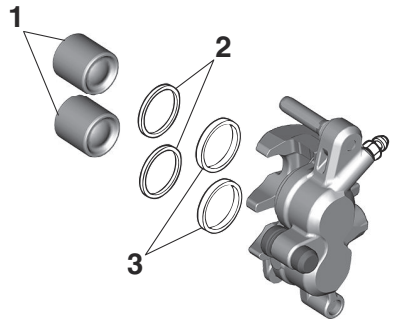

   a. Blow compressed air into the brake hose joint opening to force out the piston from the brake caliper.

EWA13550

WARNING

- **Cover the brake caliper piston with a rag. Be careful not to get injured when the piston is expelled from the brake caliper.**
- **Never try to pry out the brake caliper piston.**

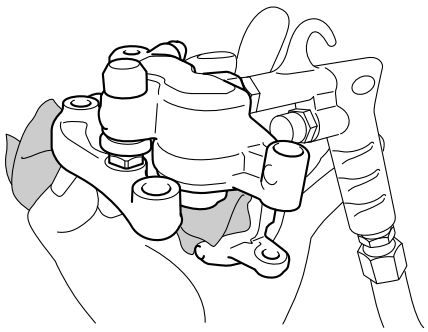

   b. Remove the brake caliper piston dust seal and the brake caliper piston seal.

EAM30032

CHECKING THE FRONT BRAKE CALIPER

1. Check:
   - Brake caliper piston "1"
     Rust/scratches/wear → Replace the brake caliper piston.
   - Brake caliper cylinder "2"
     Scratches/wear → Replace the brake caliper assembly.
   - Brake caliper body "3"
     Cracks/damage → Replace the brake caliper assembly.
   - Brake fluid delivery passages (brake caliper body)
     Obstruction → Blow out with compressed air.

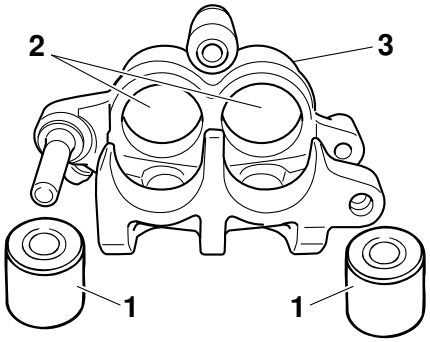

EWA19220

WARNING

When the brake caliper is disassembled, replace the brake caliper piston seal and the brake caliper piston dust seal with new ones.

2. Check:
   - Brake caliper bracket
     Crack/damage → Replace.

EAM30033

ASSEMBLING THE FRONT BRAKE CALIPER

EWA19230

WARNING

- **Before installation, clean and lubricate the**

internal parts. Use new brake fluid for cleaning and lubricating.
- **Never use solvents on internal brake components as they will cause the piston seals to swell and distort.**
- **When the brake caliper is disassembled, replace the brake caliper piston seal and the brake caliper piston dust seal with new ones.**

Specified brake fluid
DOT 4

EAM30035

INSTALLING THE FRONT BRAKE CALIPER

1. Install:
   - Front brake caliper bracket
   - Front brake caliper (temporarily)
   - Copper washer New
   - Brake hose
   - Union bolt

Front brake caliper bolt
28 N·m (2.8 kgf·m, 21 lb·ft)
Front brake hose union bolt
30 N·m (3.0 kgf·m, 22 lb·ft)

EWA13531

WARNING

Proper brake hose routing is essential to insure safe vehicle operation.

ECA24460

NOTICE

Make sure that the pipe portion "a" of the brake hose touches the projection "b" on the brake caliper.

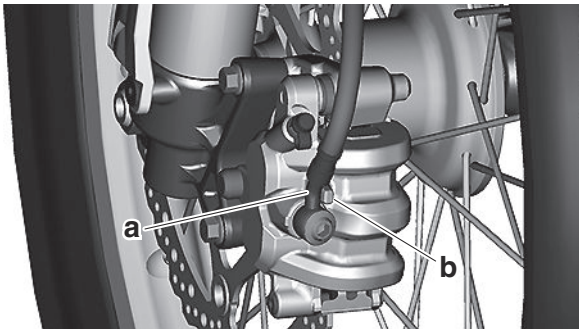

2. Install:
   - Front brake caliper
   - Brake pad spring
   - Brake pad
   - Brake pad pin
   - Brake hose holder

Brake pad pin
17 N·m (1.7 kgf·m, 13 lb·ft)

Refer to "CHECKING THE FRONT BRAKE PADS" on page 3-15.

3. Tighten:
   - Front brake hose holder bolt "1"

Front brake hose holder bolt
9 N·m (0.9 kgf·m, 6.6 lb·ft)

TIP

Make sure that the brake hose holder "2" is installed with its upper end "a" aligned with the paint "b" on the brake hose.

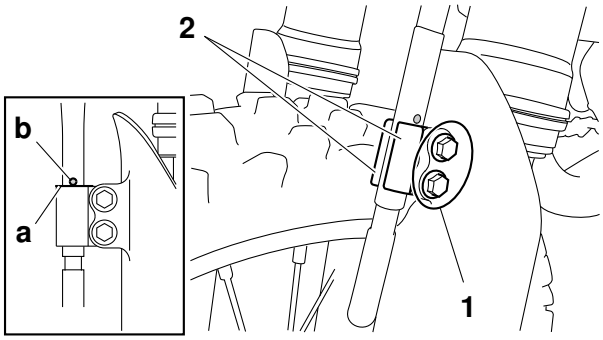

4. Pour brake fluid to the brake master cylinder reservoir up to the specified level.

Specified brake fluid
DOT 4

EWA13090

WARNING

- **Use only the designated brake fluid. Other brake fluids may cause the rubber seals to deteriorate, causing leakage and poor brake performance.**
- **Refill with the same type of brake fluid that is already in the system. Mixing brake fluids may result in a harmful chemical reaction, leading to poor brake performance.**
- **When refilling, be careful that water does not enter the brake fluid reservoir. Water will significantly lower the boiling point of the brake fluid and could cause vapor lock.**

ECA13540

NOTICE

Brake fluid may damage painted surfaces and plastic parts. Therefore, always clean up any spilt brake fluid immediately.

5. Bleed:
   - Brake system
     Refer to "BLEEDING THE HYDRAULIC

BRAKE SYSTEM" on page 3-16.
6. Check:
   - Brake fluid level
     The minimum level mark or below → Add.
     Refer to "CHECKING THE BRAKE FLUID LEVEL" on page 3-15.
7. Check:
   - Brake lever operation
     A softy or spongy feeling → Bleed the brake system.
     Refer to "BLEEDING THE HYDRAULIC BRAKE SYSTEM" on page 3-16.

EAM30036

REMOVING THE FRONT BRAKE MASTER CYLINDER

TIP

Before removing the front brake master cylinder, drain the brake fluid from the entire brake system.

1. Remove:
   - Union bolt
   - Copper washer
   - Brake hose

TIP

To drain any remaining brake fluid, place a container under the master cylinder and the end of the brake hose.

EAM30037

CHECKING THE FRONT BRAKE MASTER CYLINDER

1. Check:
   - Brake master cylinder "1"
     Damage/scratches/wear → Replace the brake master cylinder assembly.
   - Brake fluid delivery passages "2"
     (brake master cylinder body)
     Obstruction → Blow out with compressed air.

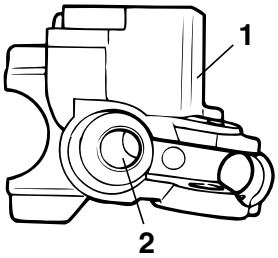

2. Check:
   - Brake master cylinder reservoir cap
     Damage/scratches/wear → Replace.
3. Check:
   - Brake hose
     Cracks/damage/wear → Replace.

EAM30038

ASSEMBLING THE FRONT BRAKE MASTER CYLINDER

EWA13520

WARNING

- **Before installation, all internal brake components should be cleaned and lubricated with clean or new brake fluid.**
- **Never use solvents on internal brake components.**

	Specified brake fluid **DOT 4**

1. Wash the brake master cylinder with brake fluid.
2. Install:
   - Primary cylinder cup "1"
   - Secondary cylinder cup "2"
     (to the brake master cylinder piston "3")

EWA20240

WARNING

Apply brake fluid to the cylinder cups and install them as shown. Wrong orientation in installation causes poor braking performance.

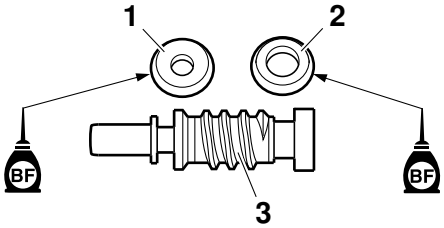

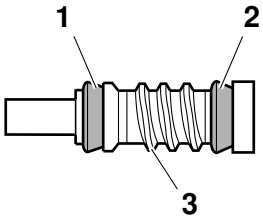

3. Install:
   - Spring "1"
     (to the brake master cylinder piston "2")

TIP

Install the spring with a smaller inside diameter to the brake master cylinder piston.

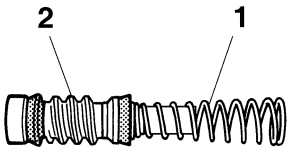

4. Install:
   - Brake master cylinder piston assembly “1”
   - Washer “2”
   - Circlip “3”
   - Dust boot “4”
   - Push rod “5”

TIP

- Always install new brake master cylinder kit “6”.
- Before installation, apply brake fluid to the components of the brake master cylinder piston assembly.
- Before installation, apply silicone grease to the push rod end.
- Before installation, apply brake fluid to the inside of the brake master cylinder.

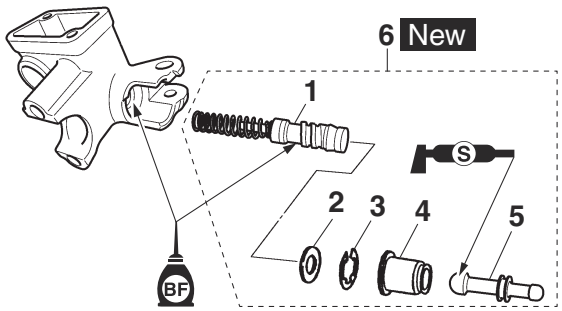

EAM30039

INSTALLING THE FRONT BRAKE MASTER CYLINDER

1. Install:
   - Brake master cylinder “1”

	Front brake master cylinder holder bolt **9 N·m (0.9 kgf·m, 6.6 lb·ft)**

TIP

- Install the front brake master cylinder holder with the “UP” mark “a” facing up.
- First, tighten the upper bolt, then the lower bolt.

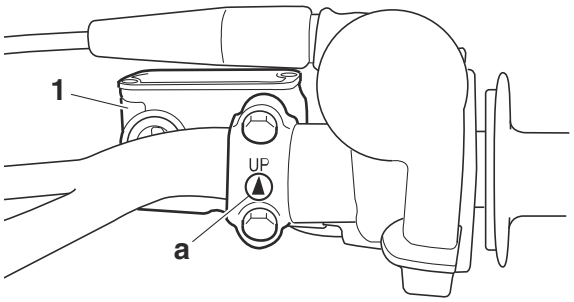

2. Install:
   - Copper washer “1” New
   - Brake hose “2”
   - Union bolt “3”

	Front brake hose union bolt **30 N·m (3.0 kgf·m, 22 lb·ft)**

EWA13531

WARNING

Proper brake hose routing is essential to insure safe vehicle operation.

ECA24470

NOTICE

During installation, bring the brake hose into contact with the brake master cylinder projection “a” and make its bent portion “b” face downward.

TIP

Turn the handlebar toward right and left to make sure that the brake hose does not touch other parts (e.g., wire harness, cables, leads). Adjust if necessary.

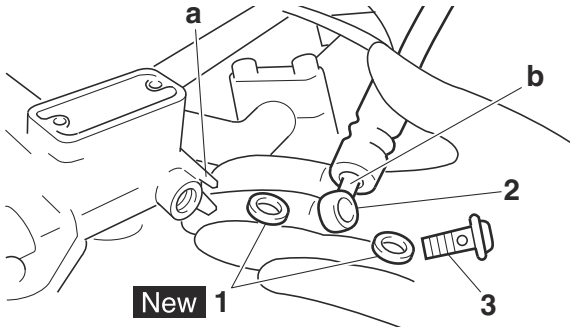

3. Pour brake fluid to the brake master cylinder reservoir up to the specified level.

	Specified brake fluid **DOT 4**

EWA13090

WARNING

- **Use only the designated brake fluid. Other brake fluids may cause the rubber seals to deteriorate, causing leakage and poor brake performance.**
- **Refill with the same type of brake fluid that is already in the system. Mixing brake fluids may result in a harmful chemical reaction, leading to poor brake performance.**
- **When refilling, be careful that water does not enter the brake fluid reservoir. Water will significantly lower the boiling point of the brake fluid and could cause vapor lock.**

ECA13540

NOTICE

Brake fluid may damage painted surfaces and plastic parts. Therefore, always clean up any spilt brake fluid immediately.

4. Bleed:
   - Brake system
     Refer to “BLEEDING THE HYDRAULIC BRAKE SYSTEM” on page 3-16.
5. Check:
   - Brake fluid level
     The minimum level mark or below → Add.
     Refer to “CHECKING THE BRAKE FLUID LEVEL” on page 3-15.
6. Check:
   - Brake lever operation
     A softy or spongy feeling → Bleed the brake system.
     Refer to “BLEEDING THE HYDRAULIC BRAKE SYSTEM” on page 3-16.

EAM20098

REAR BRAKE

Removing the rear brake caliper

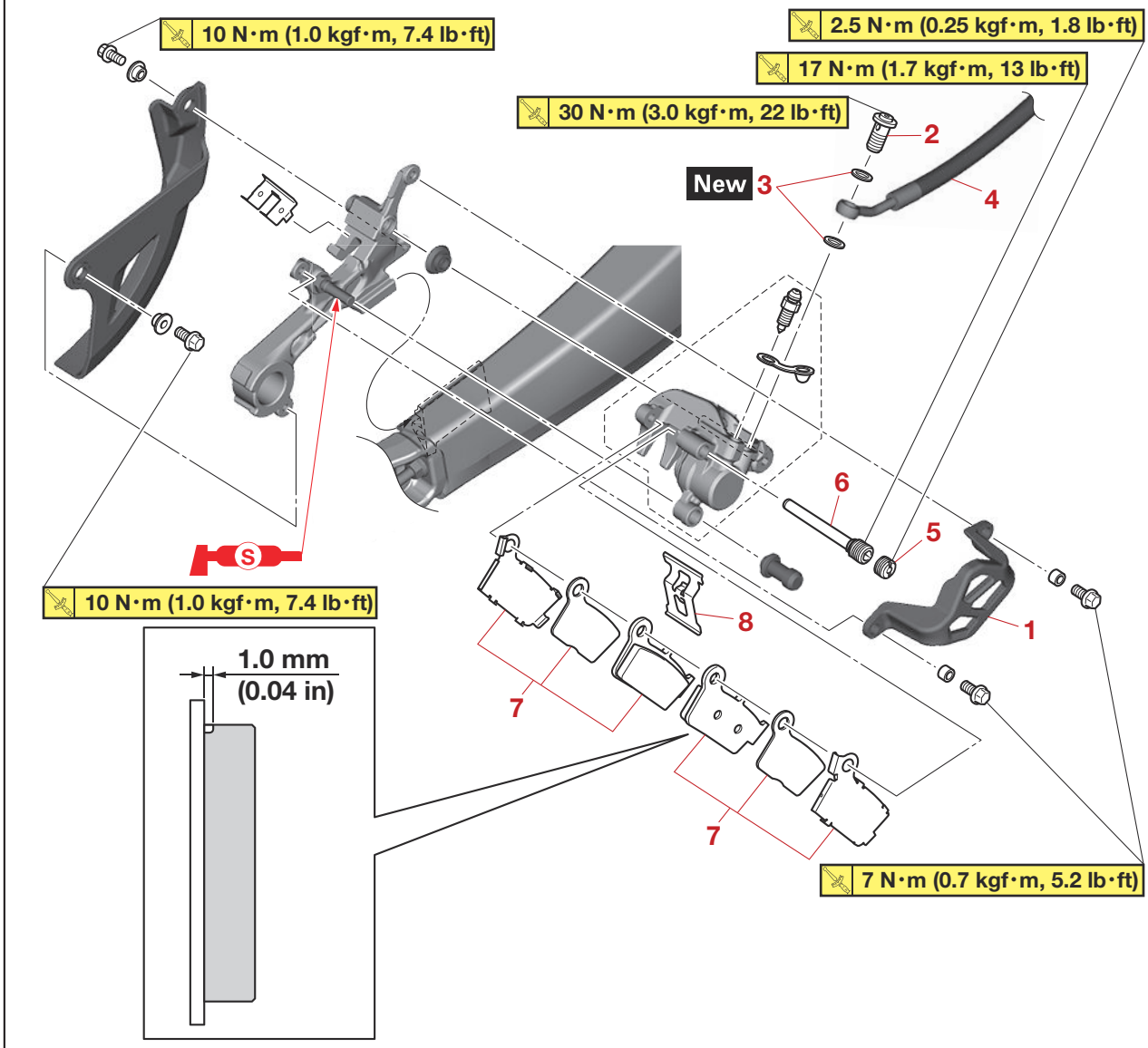

Order	Job/Parts to remove	Q'ty	Remarks
	Brake fluid		Drain. Refer to "BLEEDING THE HYDRAULIC BRAKE SYSTEM" on page 3-16.
1	Protector	1	
2	Union bolt	1	
3	Copper washer	2	
4	Rear brake hose	1	
5	Brake pad pin plug	1	
6	Brake pad pin	1	
7	Rear brake pad assembly	1	
8	Brake pad spring	1	

Removing the rear brake caliper

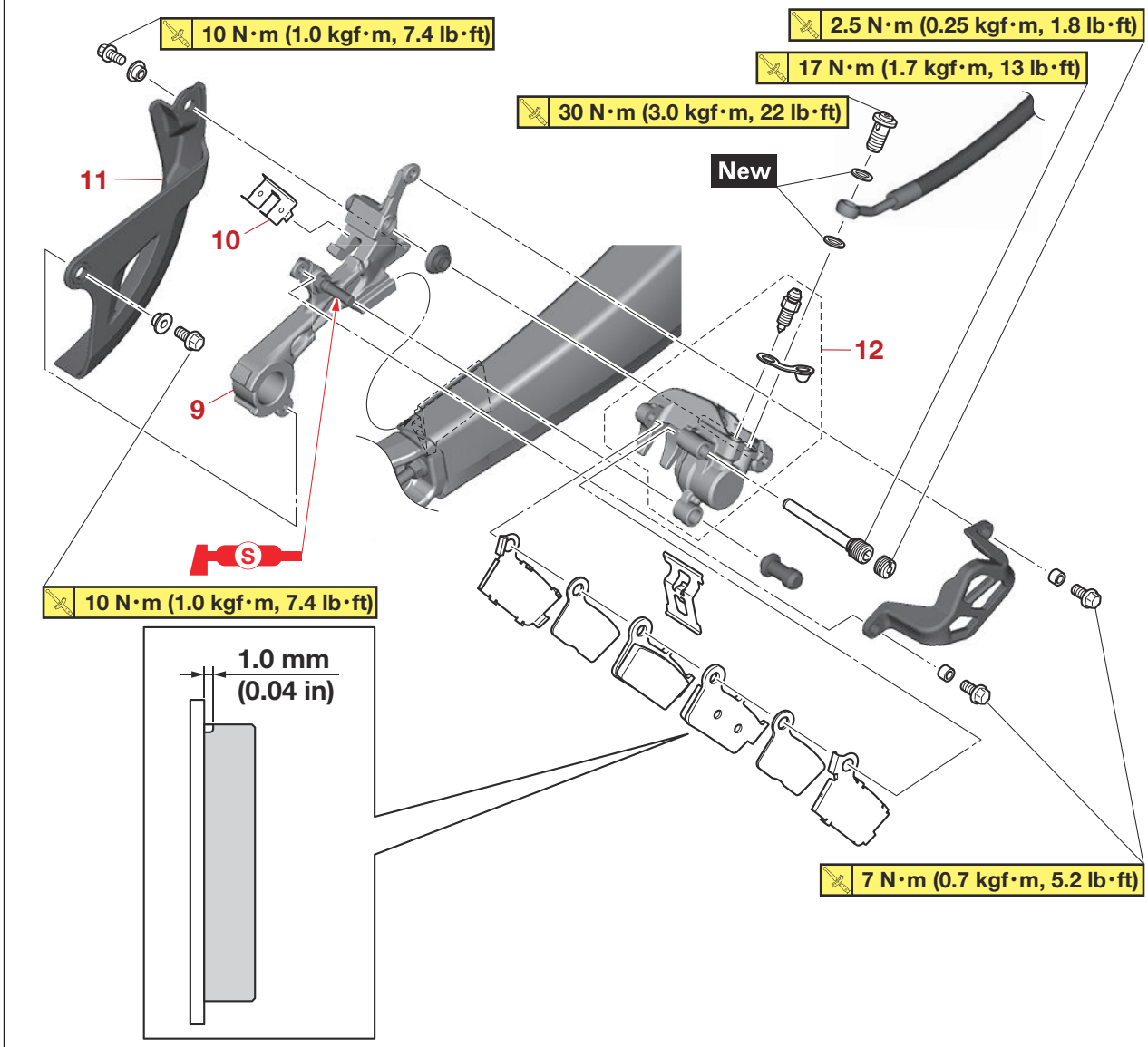

Order	Job/Parts to remove	Q'ty	Remarks
9	Rear brake caliper bracket	1	
10	Brake pad spring	1	
11	Rear brake disc cover	1	
12	Rear brake caliper assembly	1	

Disassembling the rear brake caliper

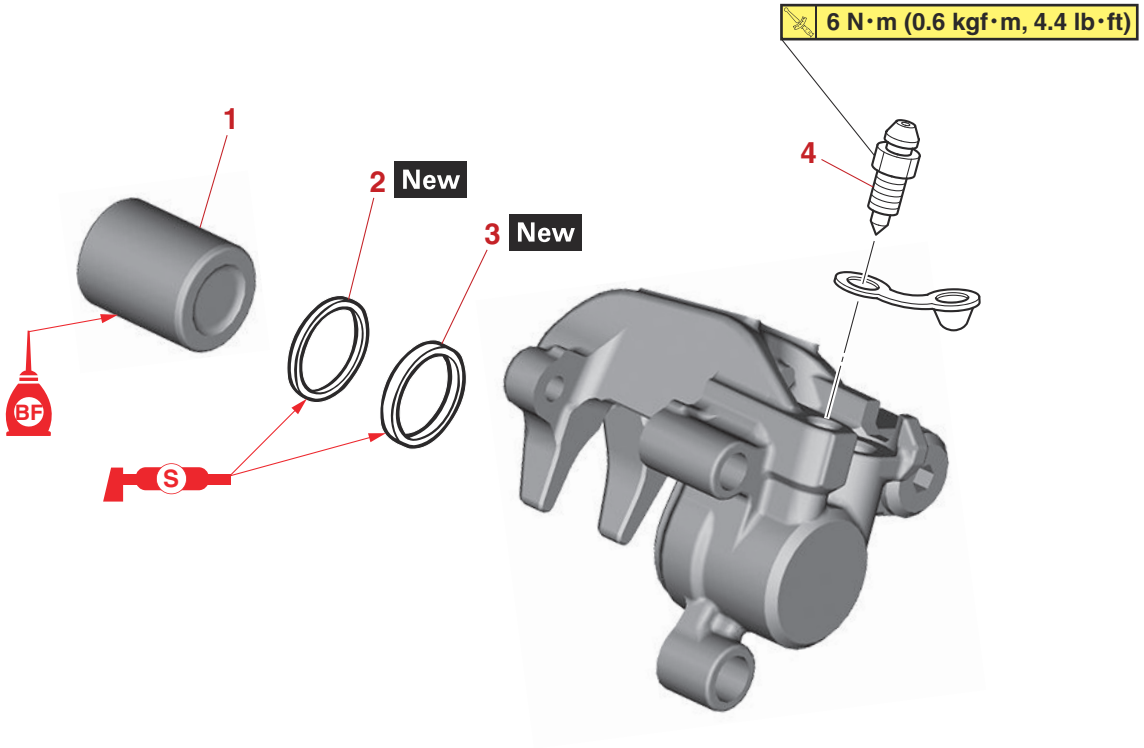

Order	Job/Parts to remove	Q'ty	Remarks
1	Brake caliper piston	1	
2	Brake caliper piston dust seal	1	
3	Brake caliper piston seal	1	
4	Bleed screw	1	

Removing the rear brake master cylinder

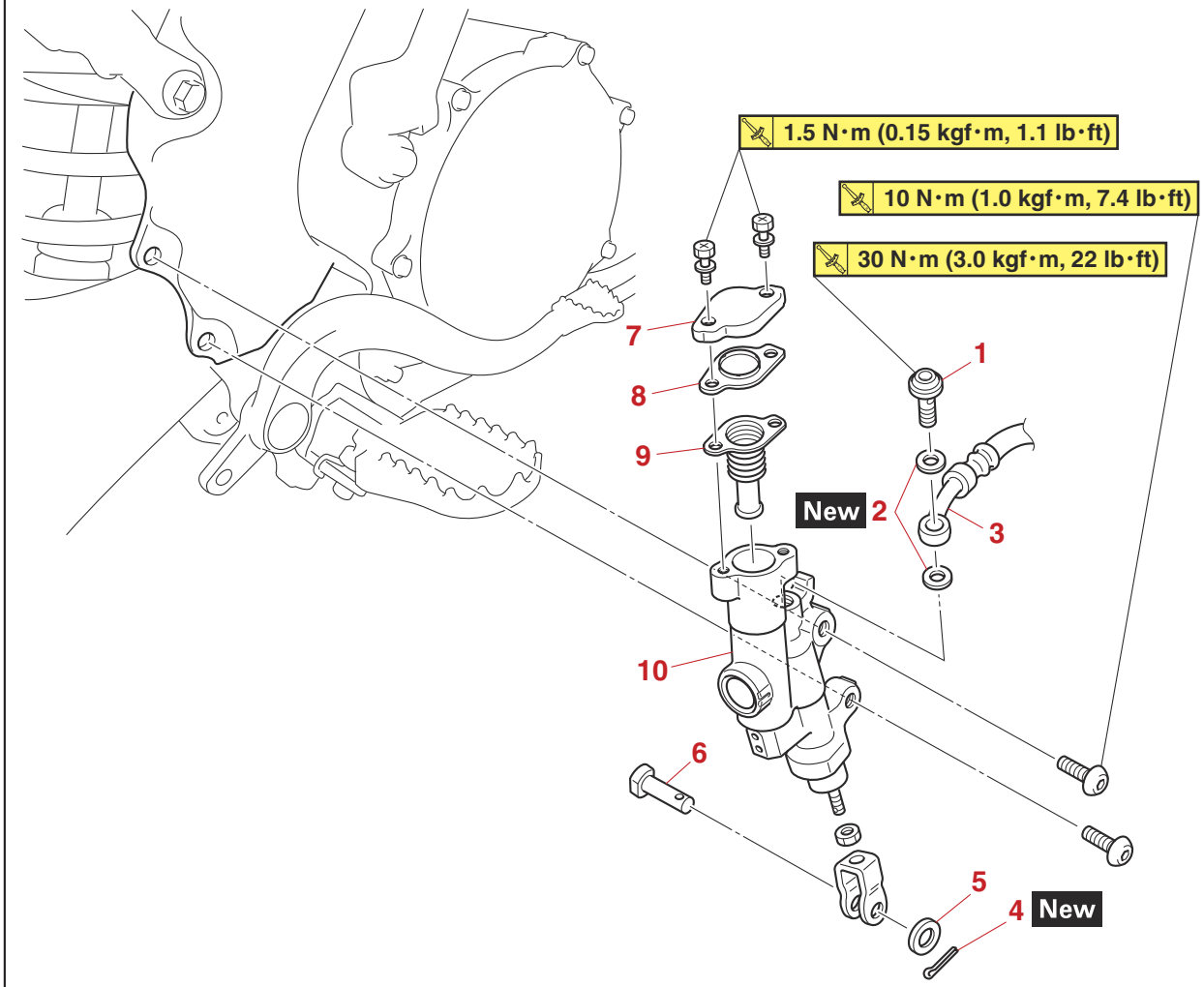

Order	Job/Parts to remove	Q'ty	Remarks
	Brake fluid		Drain. Refer to "BLEEDING THE HYDRAULIC BRAKE SYSTEM" on page 3-16.
1	Union bolt	1	
2	Copper washer	2	
3	Brake hose	1	
4	Split pin	1	
5	Washer	1	
6	Pin	1	
7	Brake master cylinder reservoir cap	1	
8	Brake master cylinder reservoir diaphragm plate	1	
9	Brake master cylinder reservoir diaphragm	1	
10	Rear brake master cylinder	1	

Disassembling the rear brake master cylinder

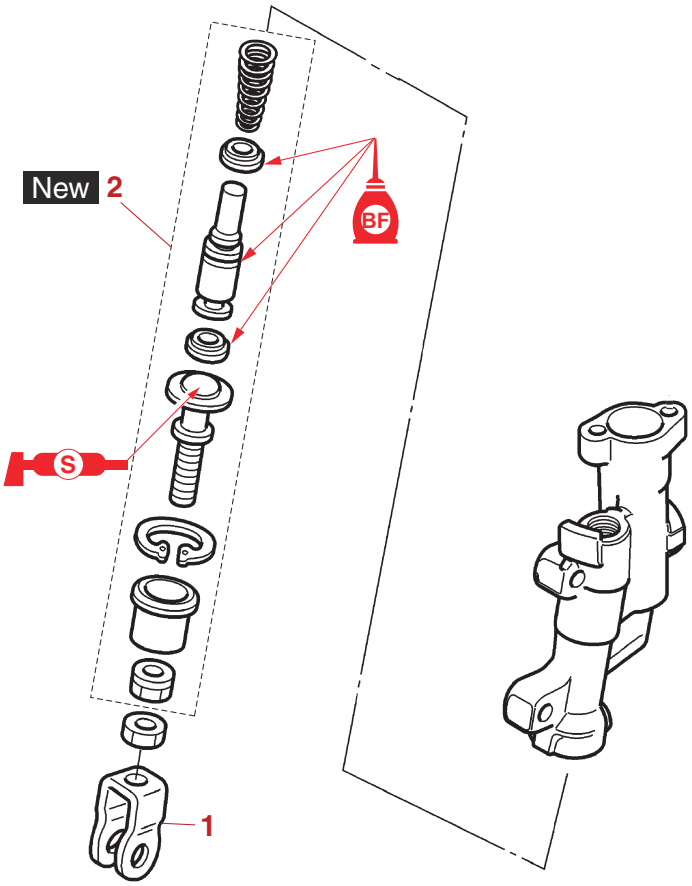

Order	Job/Parts to remove	Q'ty	Remarks
1	Brake master cylinder joint	1	
2	Brake master cylinder kit	1	

EAM30040

INTRODUCTION

EWA19260

WARNING

If you need to disassemble the disc brake components, observe the following precautions.

- **Never disassemble the brake components unless absolutely necessary.**
- **If there is any problem with connections on the hydraulic brake system, perform the following jobs. Disassemble the brake system, drain the brake fluid, and clean it. After that, add a suitable amount of brake fluid. Then, bleed it after reassembly.**
- **Use only brake fluid for washing internal brake components.**
- **Use new brake fluid for cleaning the brake components.**
- **Immediately wipe off the spilled brake fluid to avoid damage to painted surfaces or plastic parts.**
- **Handle brake fluid with special care not to let it enter your eyes so that you may not lost your eyesight.**
- **FIRST AID FOR BRAKE FLUID ENTERING THE EYES:**
- **Flush with water for 15 minutes and get immediate medical attention.**

EAM30041

CHECKING THE REAR BRAKE DISC

1. Check:
   - Brake disc
     Damage/galling → Replace.
2. Measure:
   - Brake disc thickness
     Measure the brake disc thickness at a few different locations.
     Out of specification → Replace.
     Refer to "CHECKING THE FRONT BRAKE DISC" on page 4-17.

Brake disc thickness limit
3.5 mm (0.14 in)

3. Measure:
   - Brake disc runout
     Out of specification → Replace the brake disc.
     Refer to "CHECKING THE FRONT BRAKE DISC" on page 4-17.

Brake disc runout limit (as measured on wheel)
0.15 mm (0.0059 in)

4. Replace:
   - Brake disc
     Refer to "ASSEMBLING THE REAR WHEEL" on page 4-11.

EAM30523

REPLACING THE REAR BRAKE PADS

TIP

When replacing the brake pads, it is not necessary to disconnect the brake hose or disassemble the brake caliper.

1. Remove:
   - Brake pad
     a. Remove the protector "1" and the pad pin plug "2".

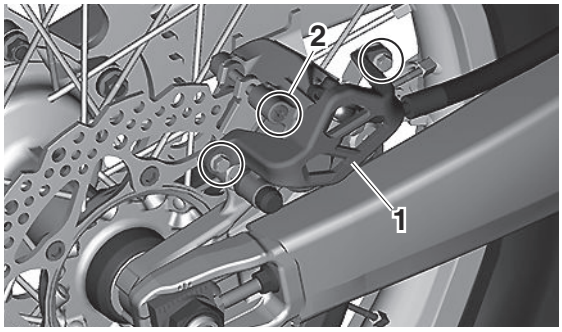

     b. Loosen the pad pin "3".
     c. Remove the rear wheel "4" and the brake caliper "5".
     Refer to "REAR WHEEL" on page 4-8.

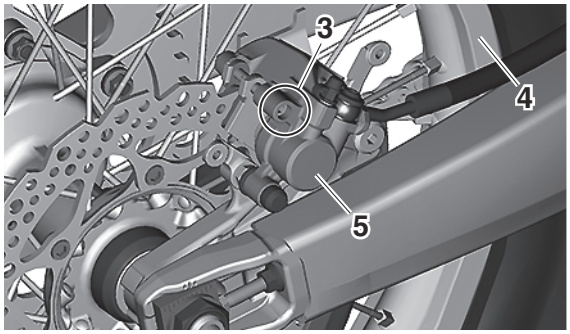

     d. Remove the pad pin "6" and the brake pads "7".

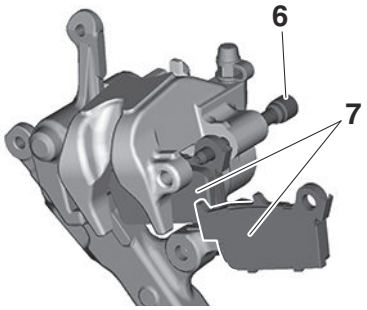

2. Measure:
   - Brake pad wear limit “a”
     Out of specification → Replace the brake pads as a set.

	Brake pad lining thickness limit 1.0 mm (0.04 in)

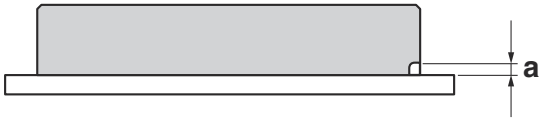

3. Install:
   - Brake pad
     a. Connect the plastic hose “1” to the bleed screw “2” and place a container under the end of the plastic hose.
     b. Loosen the bleed screw and push the brake caliper piston in.

EWA19170

WARNING

Do not reuse the drained brake fluid.

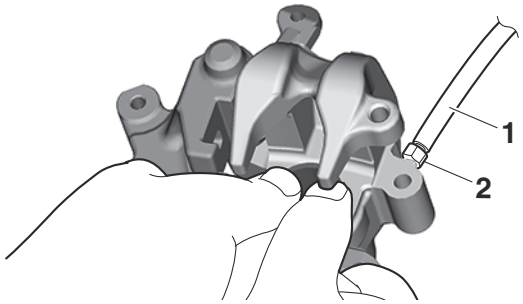

c. Tighten the bleed screw.

	Brake caliper bleed screw 6 N·m (0.6 kgf·m, 4.4 lb·ft)

d. Install the brake pads “3” and the pad pin “4”.

TIP
- Install the brake pads with their projections “a” into the brake caliper recesses “b”.
- Temporarily tighten the pad pin at this point.

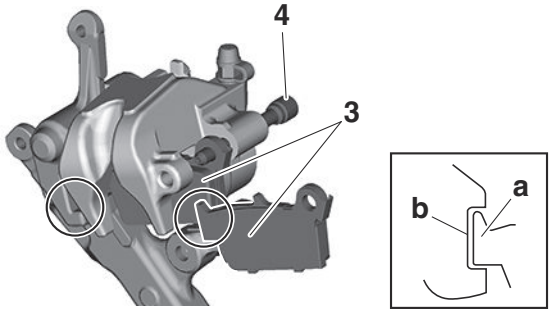

e. Install the brake caliper “5” and the rear wheel “6”.
   Refer to “REAR WHEEL” on page 4-8.
f. Tighten the pad pin “7”.

	Brake pad pin 17 N·m (1.7 kgf·m, 13 lb·ft)

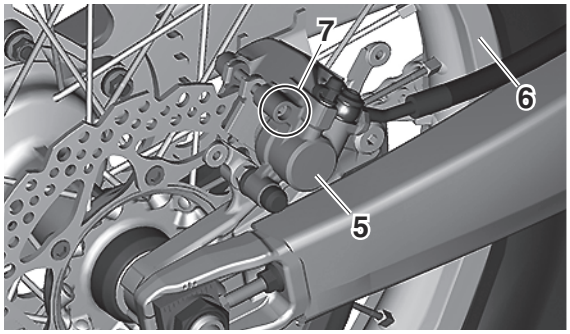

g. Install the pad pin plug “8” and the protector “9”.

	Brake pad pin plug 2.5 N·m (0.25 kgf·m, 1.8 lb·ft) **Rear brake caliper protector bolt 7 N·m (0.7 kgf·m, 5.2 lb·ft)**

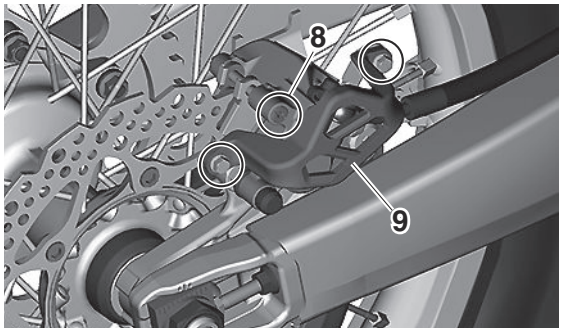

4. Check:
   - Brake fluid level
     Refer to "CHECKING THE BRAKE FLUID LEVEL" on page 3-15.
5. Check:
   - Brake pedal operation
     A softy or spongy feeling → Bleed the brake system.
     Refer to "BLEEDING THE HYDRAULIC BRAKE SYSTEM" on page 3-16.

EAM30042

REMOVING THE REAR BRAKE CALIPER

TIP

Before disassembling the brake caliper, drain the brake fluid from the entire brake system.

1. Remove:
   - Union bolt
   - Copper washer
   - Brake hose

TIP

Put the end of the brake hose into a container and pump out the brake fluid.

EAM30043

DISASSEMBLING THE REAR BRAKE CALIPER

1. Remove:
   - Brake caliper piston "1"
   - Brake caliper piston dust seal "2"
   - Brake caliper piston seal "3"

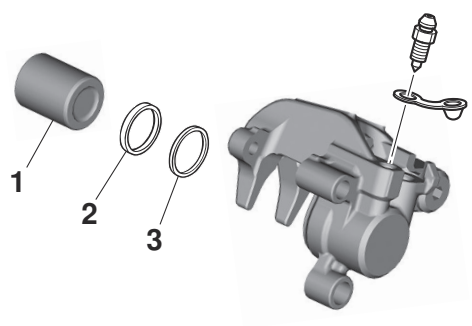

   a. Blow compressed air into the brake hose joint opening to force out the piston from the brake caliper.

EWA13550

WARNING

- **Cover the brake caliper piston with a rag. Be careful not to get injured when the piston is expelled from the brake caliper.**
- **Never try to pry out the brake caliper piston.**

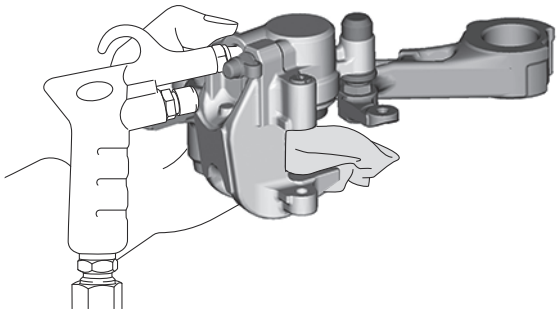

   b. Remove the brake caliper piston dust seal and the brake caliper piston seal.

EAM30044

CHECKING THE REAR BRAKE CALIPER

1. Check:
   - Brake caliper piston "1"
     Rust/scratches/wear → Replace the brake caliper piston.
   - Brake caliper cylinder "2"
     Scratches/wear → Replace the brake caliper assembly.
   - Brake caliper body "3"
     Cracks/damage → Replace the brake caliper assembly.
   - Brake fluid delivery passages (brake caliper body)
     Obstruction → Blow out with compressed air.

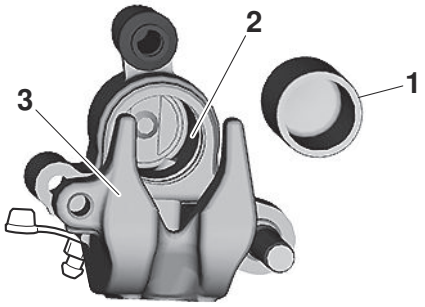

EWA19270

WARNING

When the brake caliper is disassembled, replace the brake caliper piston seal and the brake caliper piston dust seal with new ones.

2. Check:
   - Brake caliper bracket
     Crack/damage → Replace.

EAM30045

ASSEMBLING THE REAR BRAKE CALIPER

EWA19280

WARNING

- **Before installation, clean and lubricate the internal parts. Use new brake fluid for**

cleaning and lubricating.
- **Never use solvents on internal brake components as they will cause the piston seals to swell and distort.**
- **When the brake caliper is disassembled, replace the brake caliper piston seal and the brake caliper piston dust seal with new ones.**

	Specified brake fluid **DOT 4**

EAM30047

INSTALLING THE REAR BRAKE CALIPER

1. Install:
   - Rear brake caliper
   - Rear brake caliper bracket
2. Install:
   - Rear wheel
     Refer to "REAR WHEEL" on page 4-8.
   - Copper washer New
   - Brake hose
   - Union bolt

	Rear brake hose union bolt **30 N·m (3.0 kgf·m, 22 lb·ft)**

EWA13531

WARNING

Proper brake hose routing is essential to insure safe vehicle operation.

ECA24490

NOTICE

Make sure that a bend in its pipe portion "a" is directed as shown and the brake hose touches the projection "b" on the brake caliper.

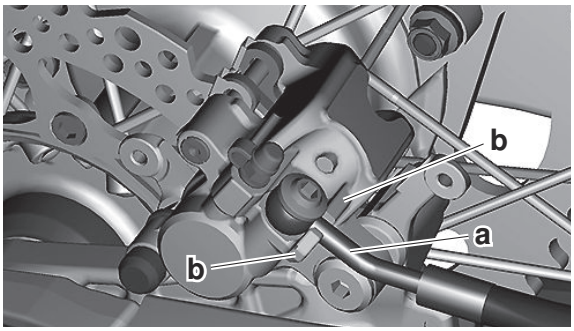

3. Install:
   - Brake pad spring
   - Brake pad
   - Brake pad pin
   - Brake pad pin plug

	Brake pad pin **17 N·m (1.7 kgf·m, 13 lb·ft)** **Brake pad pin plug** **2.5 N·m (0.25 kgf·m, 1.8 lb·ft)**

   Refer to "CHECKING THE REAR BRAKE PADS" on page 3-15.
4. Pour brake fluid to the brake fluid reservoir up to the specified level.

	Specified brake fluid **DOT 4**

EWA13090

WARNING

- **Use only the designated brake fluid. Other brake fluids may cause the rubber seals to deteriorate, causing leakage and poor brake performance.**
- **Refill with the same type of brake fluid that is already in the system. Mixing brake fluids may result in a harmful chemical reaction, leading to poor brake performance.**
- **When refilling, be careful that water does not enter the brake fluid reservoir. Water will significantly lower the boiling point of the brake fluid and could cause vapor lock.**

ECA13540

NOTICE

Brake fluid may damage painted surfaces and plastic parts. Therefore, always clean up any spilt brake fluid immediately.

5. Bleed:
   - Brake system
     Refer to "BLEEDING THE HYDRAULIC BRAKE SYSTEM" on page 3-16.
6. Check:
   - Brake fluid level
     The minimum level mark or below → Add.
     Refer to "CHECKING THE BRAKE FLUID LEVEL" on page 3-15.
7. Check:
   - Brake pedal operation
     A softy or spongy feeling → Bleed the brake system.
     Refer to "BLEEDING THE HYDRAULIC BRAKE SYSTEM" on page 3-16.

EAM30048

REMOVING THE REAR BRAKE MASTER CYLINDER

TIP

Before removing the rear brake master cylinder, drain the brake fluid from the entire brake

system.

1. Remove:
   - Union bolt
   - Copper washer
   - Brake hose

TIP

To drain any remaining brake fluid, place a container under the master cylinder and the end of the brake hose.

EAM30049

CHECKING THE REAR BRAKE MASTER CYLINDER

1. Check:
   - Brake master cylinder "1"
     Damage/scratches/wear → Replace.
   - Brake fluid delivery passages "2"
     (brake master cylinder body)
     Obstruction → Blow out with compressed air.

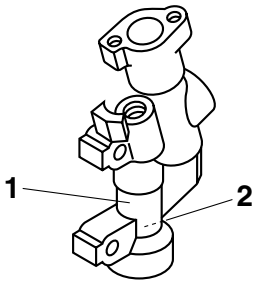

2. Check:
   - Brake master cylinder kit
     Damage/wear → Replace.
3. Check:
   - Brake master cylinder reservoir cap
     Crack/damage → Replace.
   - Brake master cylinder reservoir diaphragm holder
   - Brake master cylinder reservoir diaphragm
     Crack/damage → Replace.
4. Check:
   - Brake hose
     Cracks/damage/wear → Replace.

EAM30050

ASSEMBLING THE REAR BRAKE MASTER CYLINDER

EWA13520

WARNING

- **Before installation, all internal brake components should be cleaned and lubricated with clean or new brake fluid.**
- **Never use solvents on internal brake components.**

	Specified brake fluid **DOT 4**

1. Wash the brake master cylinder and the brake master cylinder kit with brake fluid.
2. Install:
   - Primary cylinder cup "1"
   - Secondary cylinder cup "2"
     (to the brake master cylinder piston "3")

EWA19300

WARNING

Apply brake fluid to the cylinder cups and install them as shown. Wrong orientation in installation causes poor braking performance.

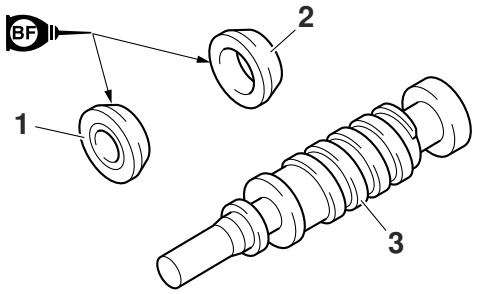

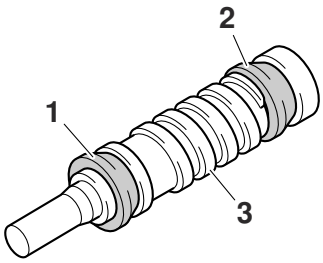

3. Install:
   - Spring "1"
     (to the brake master cylinder piston "2")

TIP

Install the spring with a smaller inside diameter to the brake master cylinder piston.

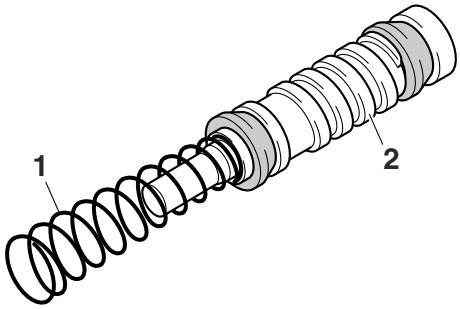

4. Install:
   - Brake master cylinder piston assembly “1”
   - Push rod “2”
   - Circlip “3”
   - Dust boot “4”

TIP

- Always install new brake master cylinder kit “5”.
- Before installation, apply brake fluid to the brake master cylinder piston assembly.
- Before installation, apply silicone grease to the push rod end.
- Before installation, apply brake fluid to the inside of the brake master cylinder.

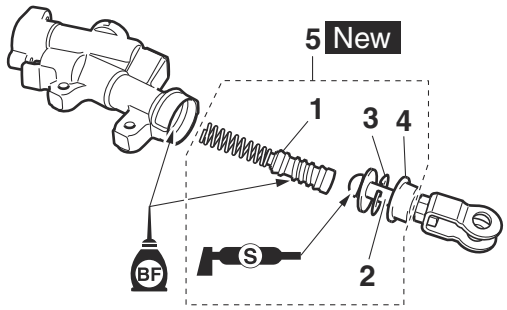

EAM30051

INSTALLING THE REAR BRAKE MASTER CYLINDER

1. Install:
   - Copper washer New
   - Brake hose
   - Union bolt

	Rear brake hose union bolt **30 N·m (3.0 kgf·m, 22 lb·ft)**

EWA13531

WARNING

Proper brake hose routing is essential to insure safe vehicle operation.

ECA24500

NOTICE

Make sure that the pipe portion of the brake hose touches the projection “a” on the brake caliper.

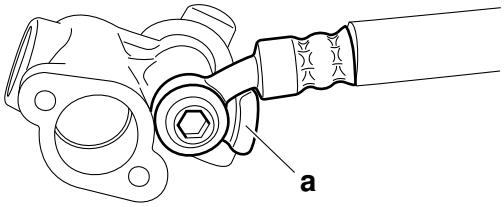

2. Pour brake fluid to the brake fluid reservoir up to the specified level.

	Specified brake fluid **DOT 4**

EWA13090

WARNING

- **Use only the designated brake fluid. Other brake fluids may cause the rubber seals to deteriorate, causing leakage and poor brake performance.**
- **Refill with the same type of brake fluid that is already in the system. Mixing brake fluids may result in a harmful chemical reaction, leading to poor brake performance.**
- **When refilling, be careful that water does not enter the brake fluid reservoir. Water will significantly lower the boiling point of the brake fluid and could cause vapor lock.**

ECA24510

NOTICE

Brake fluid may damage painted surfaces and plastic parts. Therefore, always clean up any spilt brake fluid immediately.

3. Bleed:
   - Brake system
     Refer to “BLEEDING THE HYDRAULIC BRAKE SYSTEM” on page 3-16.
4. Check:
   - Brake fluid level
     The minimum level mark or below → Add.
     Refer to “CHECKING THE BRAKE FLUID LEVEL” on page 3-15.
5. Check:
   - Brake pedal operation
     A softy or spongy feeling → Bleed the brake system.
     Refer to “BLEEDING THE HYDRAULIC BRAKE SYSTEM” on page 3-16.

EAM20099

HANDLEBAR

Removing the handlebar

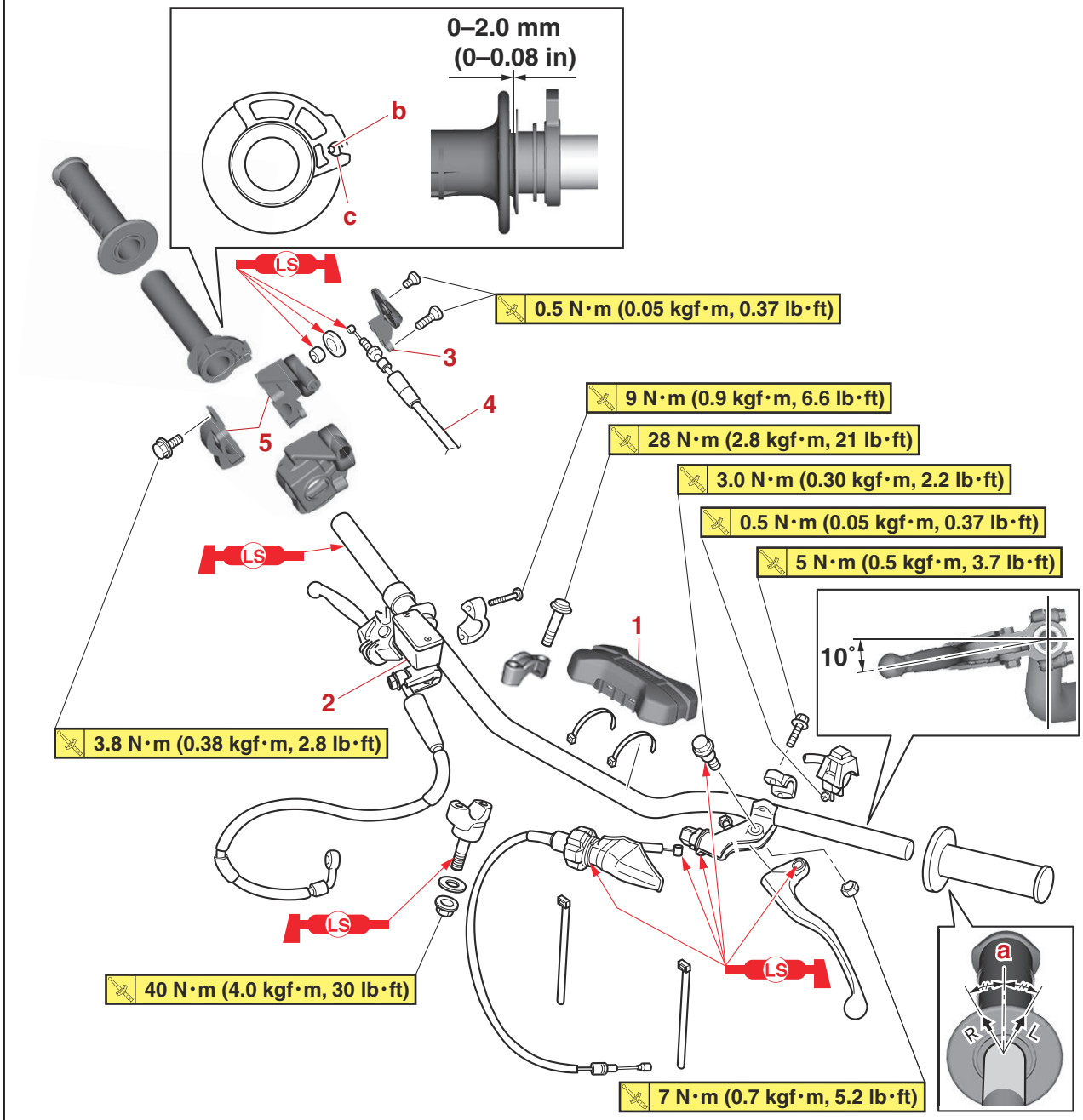

Order	Job/Parts to remove	Q'ty	Remarks
	Number plate		Refer to "GENERAL CHASSIS" on page 4-1.
1	Handlebar protector	1	
2	Brake master cylinder	1	
3	Throttle cable cap	1	
4	Throttle cable	1	Disconnect.
5	Throttle cable housing	1	

Removing the handlebar

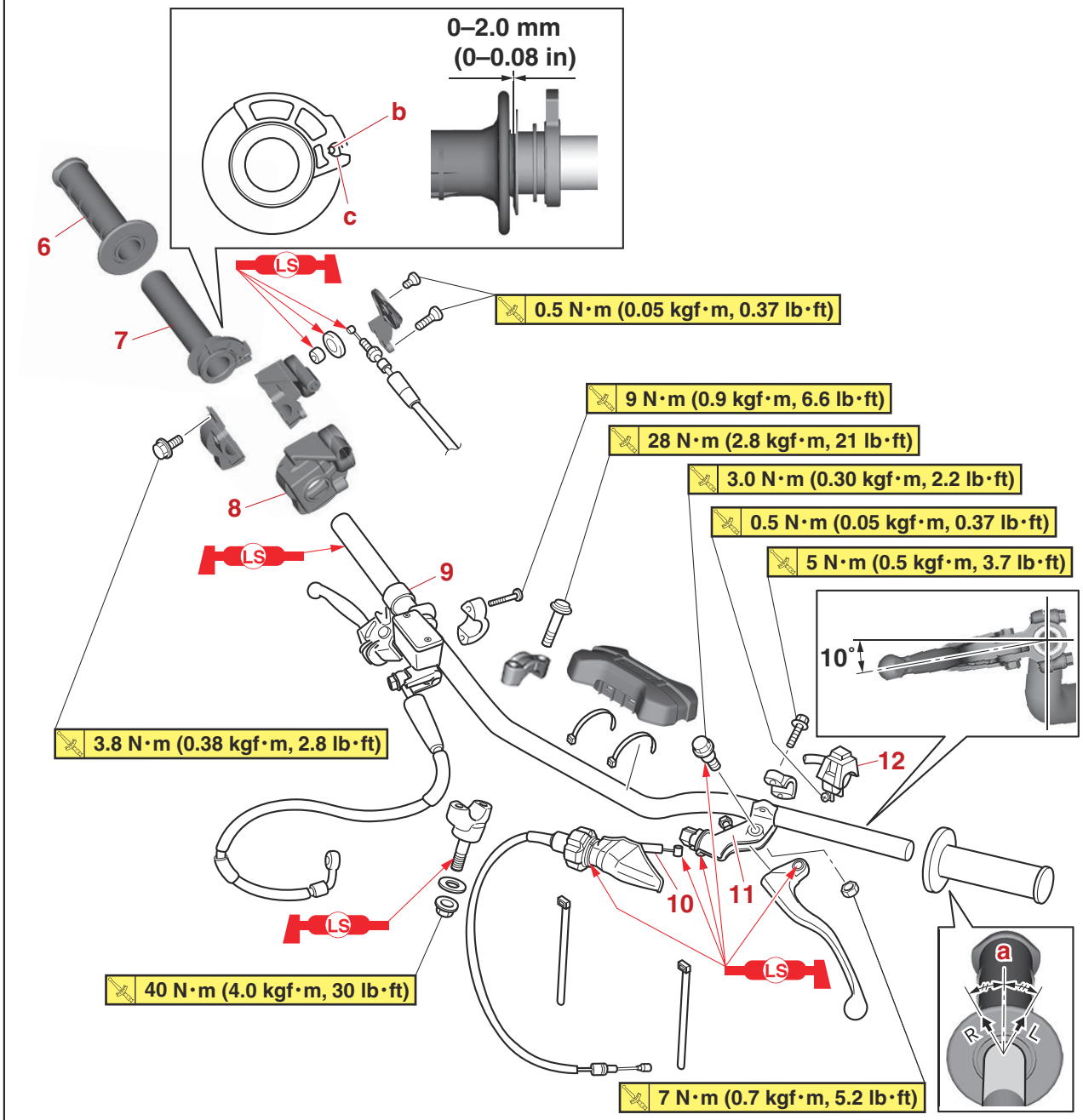

Order	Job/Parts to remove	Q'ty	Remarks
6	Handlebar grip (right)	1	Align the mating mark "b" on the handlebar grip (right) with the slot "c" in the tube guide.
7	Tube guide	1	
8	Cap cover	1	
9	Collar	1	
10	Clutch cable	1	Disconnect.
11	Clutch lever holder	1	
12	Engine stop switch	1	

Removing the handlebar

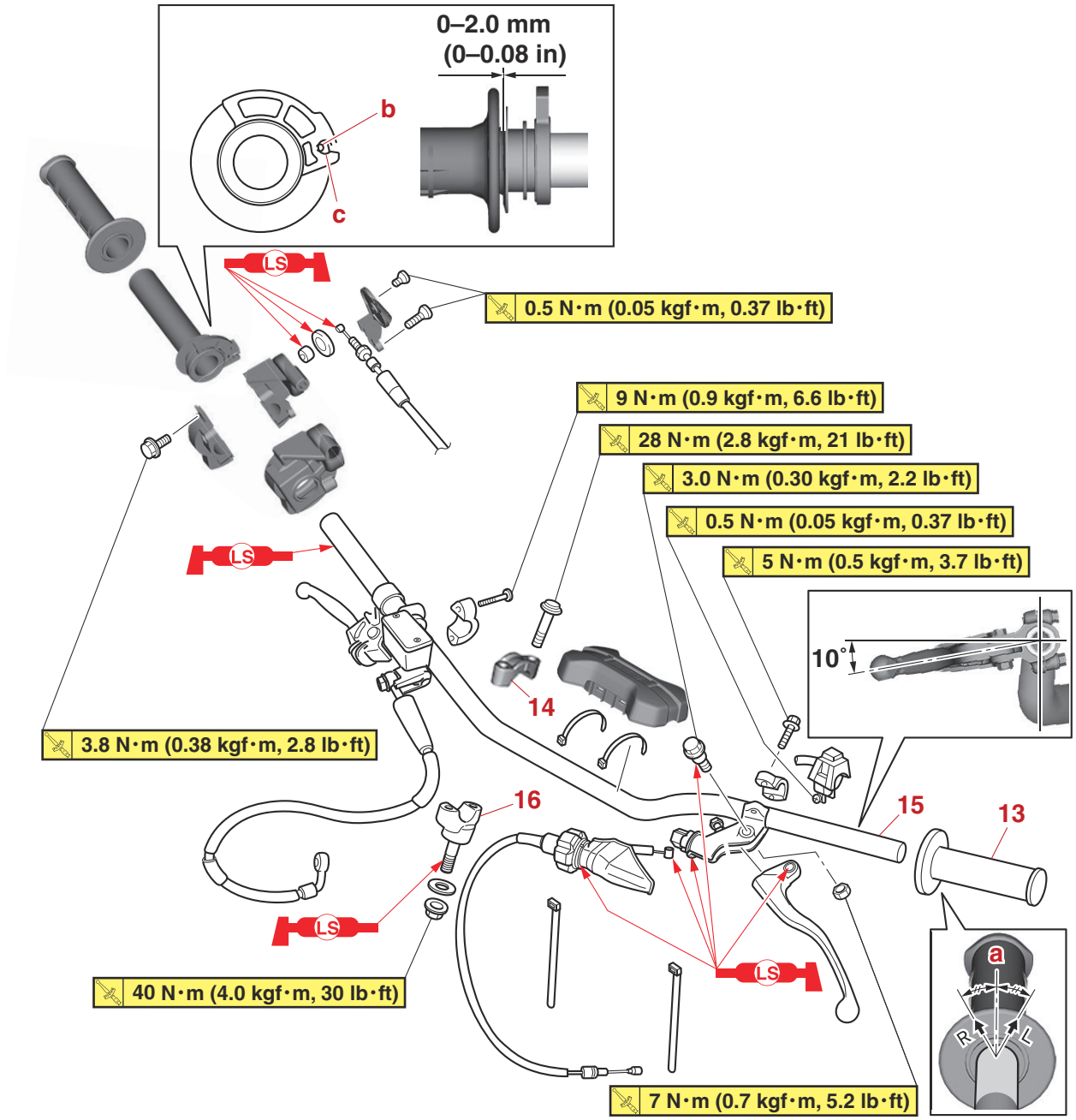

Order	Job/Parts to remove	Q'ty	Remarks
13	Handlebar grip (left)	1	Install the handlebar grip (left) to the handlebar so that the line "a" between the two arrow marks faces straight upward.
14	Upper handlebar holder	2	
15	Handlebar	1	
16	Lower handlebar holder	2	

EAM30052

REMOVING THE HANDLEBAR

1. Stand the vehicle upright on a level surface.

EWA13120

WARNING

Securely support the vehicle so that there is no danger of it falling over.

2. Remove:
   - Grip "1"

TIP

Blow in compressed air between the handlebar or tube guide and the grip. Then remove the grip which has become loose.

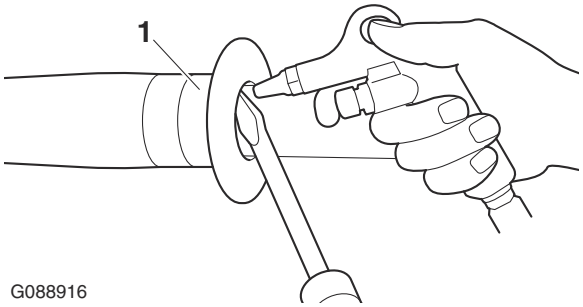

3. Remove:
   - Throttle cable housing "1"
   - Throttle grip "2"

TIP

While removing the throttle cable housing, pull back the rubber cover "3".

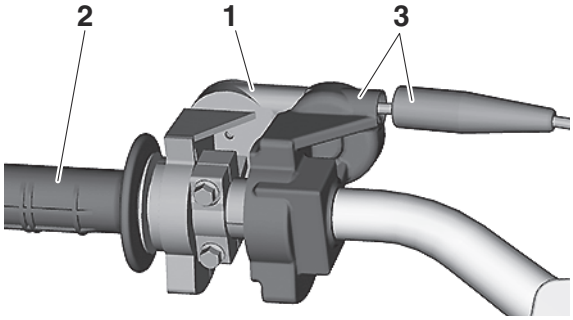

EAM30053

CHECKING THE HANDLEBAR

1. Check:
   - Handlebar
     Bends/cracks/damage → Replace.

EWA13690

WARNING

Do not attempt to straighten a bent handlebar as this may dangerously weaken it.

EAM30054

INSTALLING THE HANDLEBAR

1. Stand the vehicle upright on a level surface.

EWA13120

WARNING

Securely support the vehicle so that there is no danger of it falling over.

2. Install:
   - Lower handlebar holder "1"
   - Washer "2"
   - Lower handlebar holder nut "3"

TIP

- Install the lower handlebar holders with them side having the greater distance "a" from the mounting bolt center facing forward.
- Apply the lithium-soap-based grease on the thread of the lower handlebar holders.
- Installing the lower handlebar holders in the reverse direction allow the front-to-rear offset amount of the handlebar position to be changed.
- Do not tighten the nuts yet.

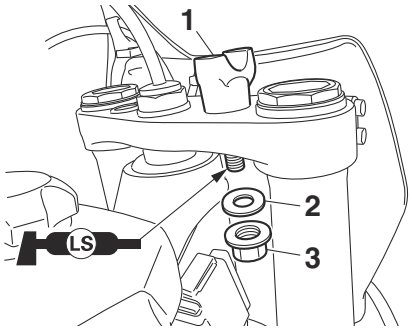

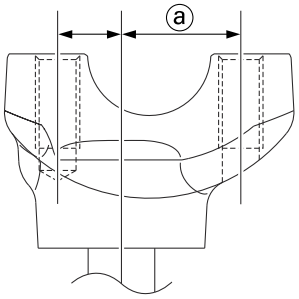

3. Install:
   - Handlebar "1"
   - Upper handlebar holder "2"
   - Upper handlebar holder bolt "3"

	Upper handlebar holder bolt 28 N·m (2.8 kgf·m, 21 lb·ft)

TIP

- The upper handlebar holders should be installed with the punch marks "a" facing forward.
- Install the handlebar so that the marks "b" are in place on both sides.

- Install the handlebar so that the projection “c” of the upper handlebar holders is positioned at the mark on the handlebar as shown.
- First tighten the bolts on the front side of the upper handlebar holder, and then tighten the bolts on the rear side.

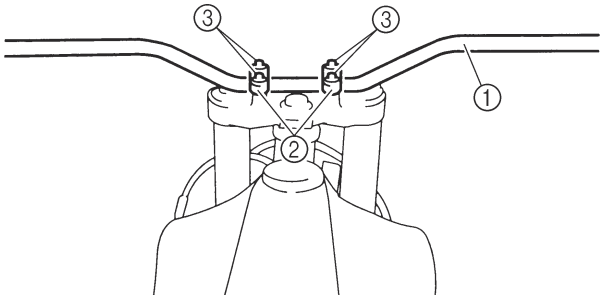

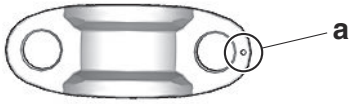

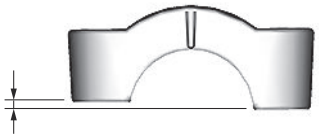

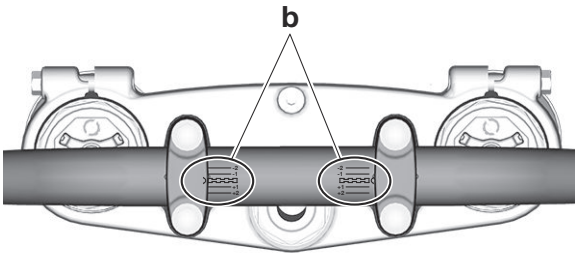

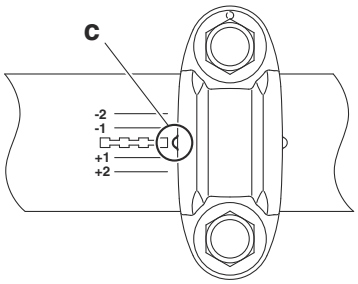

4. Tighten:
   - Lower handlebar holder nut “1”

	Lower handlebar holder nut **40 N·m (4.0 kgf·m, 30 lb·ft)**

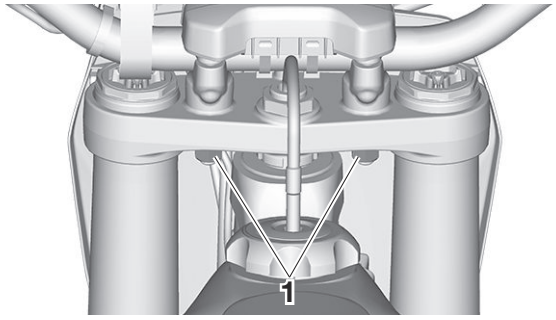

5. Install:
   - Handlebar grip (left) “1”
     a. Slightly coat the handlebar left end with a rubber adhesive.
     b. Install the handlebar grip (left) on the handlebar by pressing the grip from the left side.
     c. Wipe off any excess adhesive with a clean cloth.

TIP

Install the handlebar grip (left) to the handlebar so that the line “a” between the two arrow marks faces straight upward.

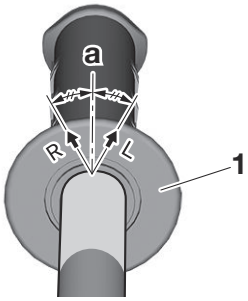

6. Install:
   - Engine stop switch “1”

	Engine stop switch screw **0.5 N·m (0.05 kgf·m, 0.37 lb·ft)**

   - Clutch lever holder “2”
   - Clutch lever holder bolt “3”

	Clutch lever holder bolt **5 N·m (0.5 kgf·m, 3.7 lb·ft)** **Clutch lever pivot bolt** **3.0 N·m (0.30 kgf·m, 2.2 lb·ft)** **Clutch lever pivot nut** **7 N·m (0.7 kgf·m, 5.2 lb·ft)**

   - Clamp “4”

TIP

- After tightening the clutch lever pivot bolt, tighten the clutch lever pivot nut, while holding the clutch lever pivot bolt to prevent it from

turning.
- The engine stop switch, clutch lever holder and clamp should be installed according to the dimensions shown.
- Pass the engine stop switch lead in the middle of the clutch lever holder.

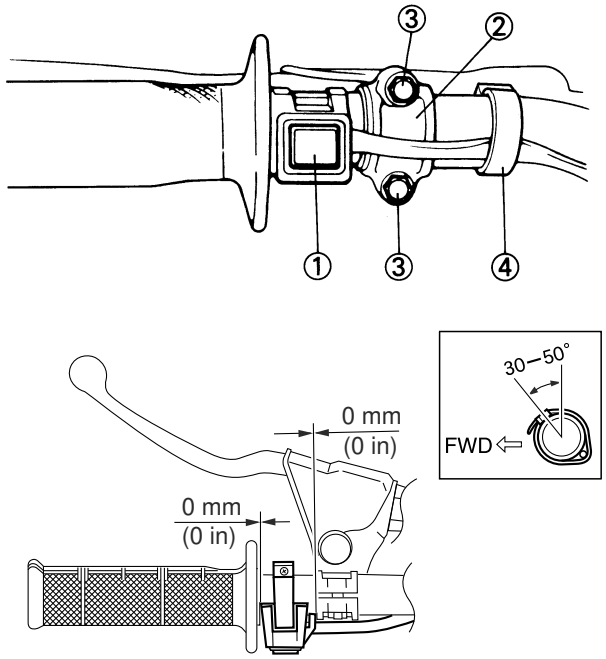

7. Install:
   - Clutch cable "1"

TIP
Apply the lithium-soap-based grease on the clutch cable end.

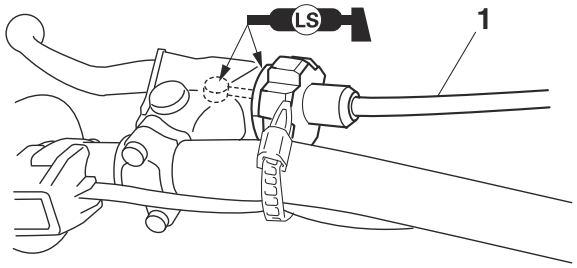

8. Adjust:
   - Clutch lever free play
     Refer to "ADJUSTING THE CLUTCH LEVER FREE PLAY" on page 3-8.
9. Install:
   - Handlebar grip (right) "1"
     Apply the adhesive on the tube guide "2".

TIP
- Before applying the adhesive, wipe off grease or oil on the tube guide surface "a" with a lacquer thinner.
- Align the mating mark "b" on the handlebar grip (right) with the slot "c" in the tube guide.

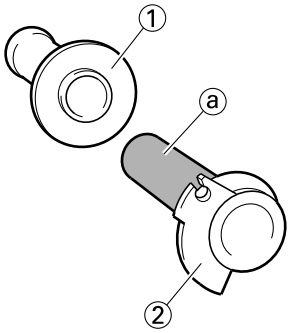

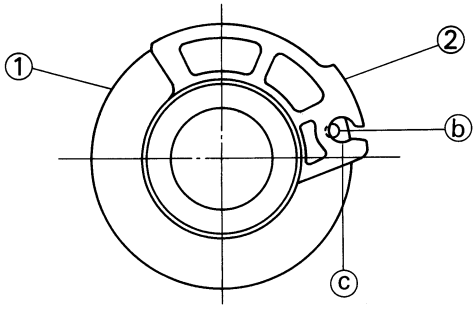

10. Install:
    - Grip cap (upper) "1"
    - Grip cap (lower) "2"
    - Grip cap bolt "3"

TIP
Temporarily tighten the grip cap bolts.

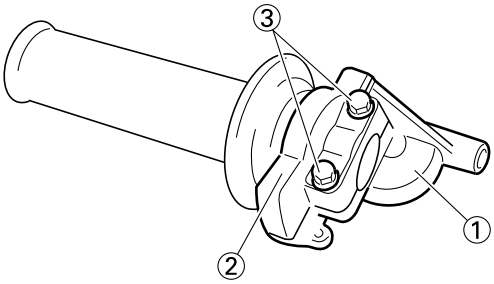

11. Install:
    - Collar "1"
    - Cap cover "2"
    - Throttle grip "3"

TIP
- Apply the lithium-soap-based grease on the throttle grip sliding surface.
- Tighten the grip cap bolts temporarily without the throttle being fixed to the handlebar.

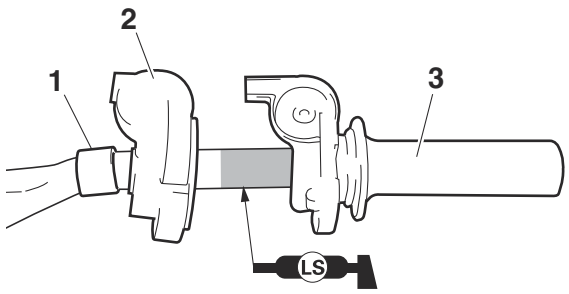

12. Install:
- Throttle cable "1"
  (to the tube guide "2")

TIP

Apply the lithium-soap-based grease on the throttle cable end and tube guide cable winding portion.

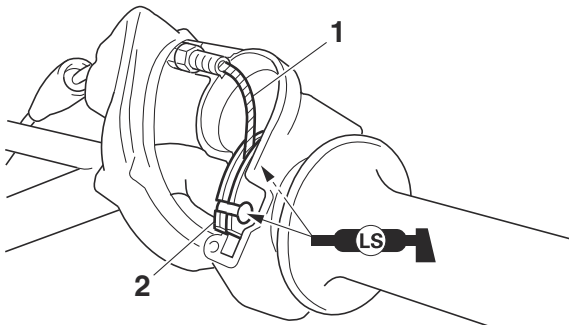

13. Install:
- Roller "1"
- Collar "2"

TIP

- Apply the lithium-soap-based grease on the roller sliding surface and cable guide.
- Install the roller so that the "UPPER" mark "a" faces upward.
- Pass the throttle cable in the groove "b" in the roller.

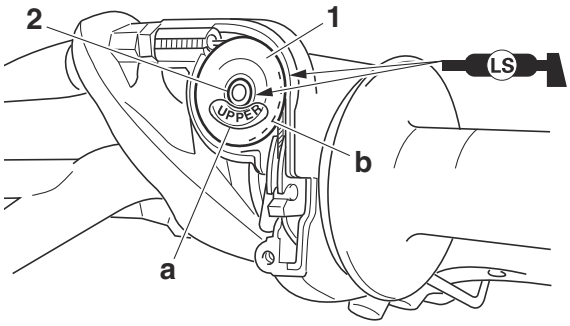

14. Install:
- Throttle cable cap "1"
- Throttle cable cap screw "2"

	Throttle cable cap screw **0.5 N·m (0.05 kgf·m, 0.37 lb·ft)**

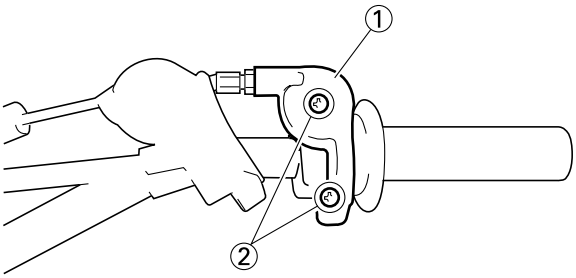

15. Adjust:
- Throttle grip free play
  Refer to "CHECKING THE THROTTLE GRIP" on page 3-6.

16. Install:
- Cap cover "1"

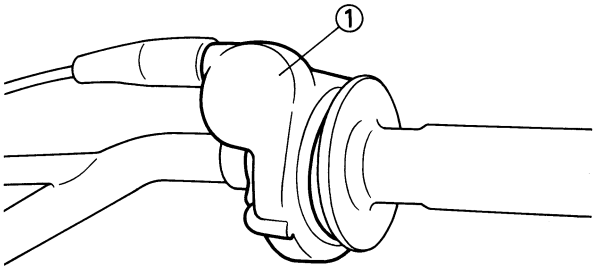

17. Install:
- Brake master cylinder "1"
- Brake master cylinder holder "2"
- Front brake master cylinder holder bolt "3"

	Front brake master cylinder holder bolt **9 N·m (0.9 kgf·m, 6.6 lb·ft)**

TIP

- Install the holder so that the arrow mark "a" faces upward.
- First tighten the bolt on the upper side of the brake master cylinder holder, and then tighten the bolt on the lower side.

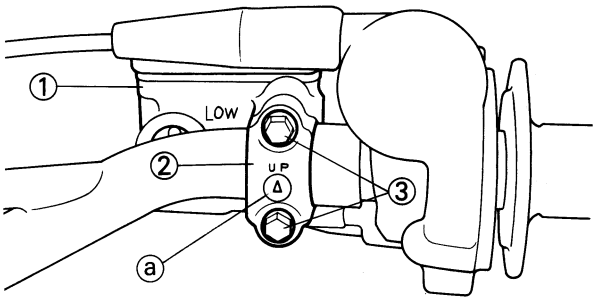

18. Install:
- Grip cap bolt "1"

	Grip cap bolt **3.8 N·m (0.38 kgf·m, 2.8 lb·ft)**

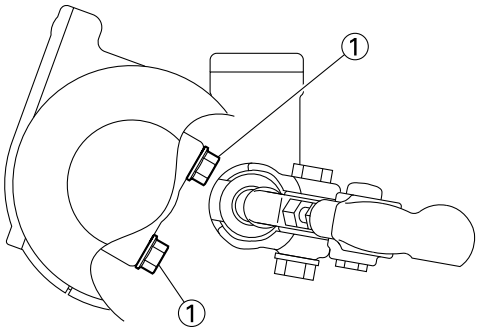

EWA21080

WARNING

After tightening the bolts, check that the throttle grip "2" moves smoothly. If it does not, retighten the bolts for adjustment.

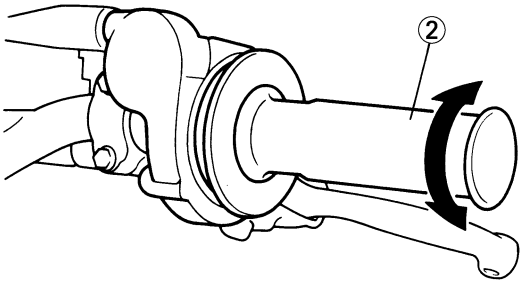

EAM20100

FRONT FORK

Removing the front fork legs

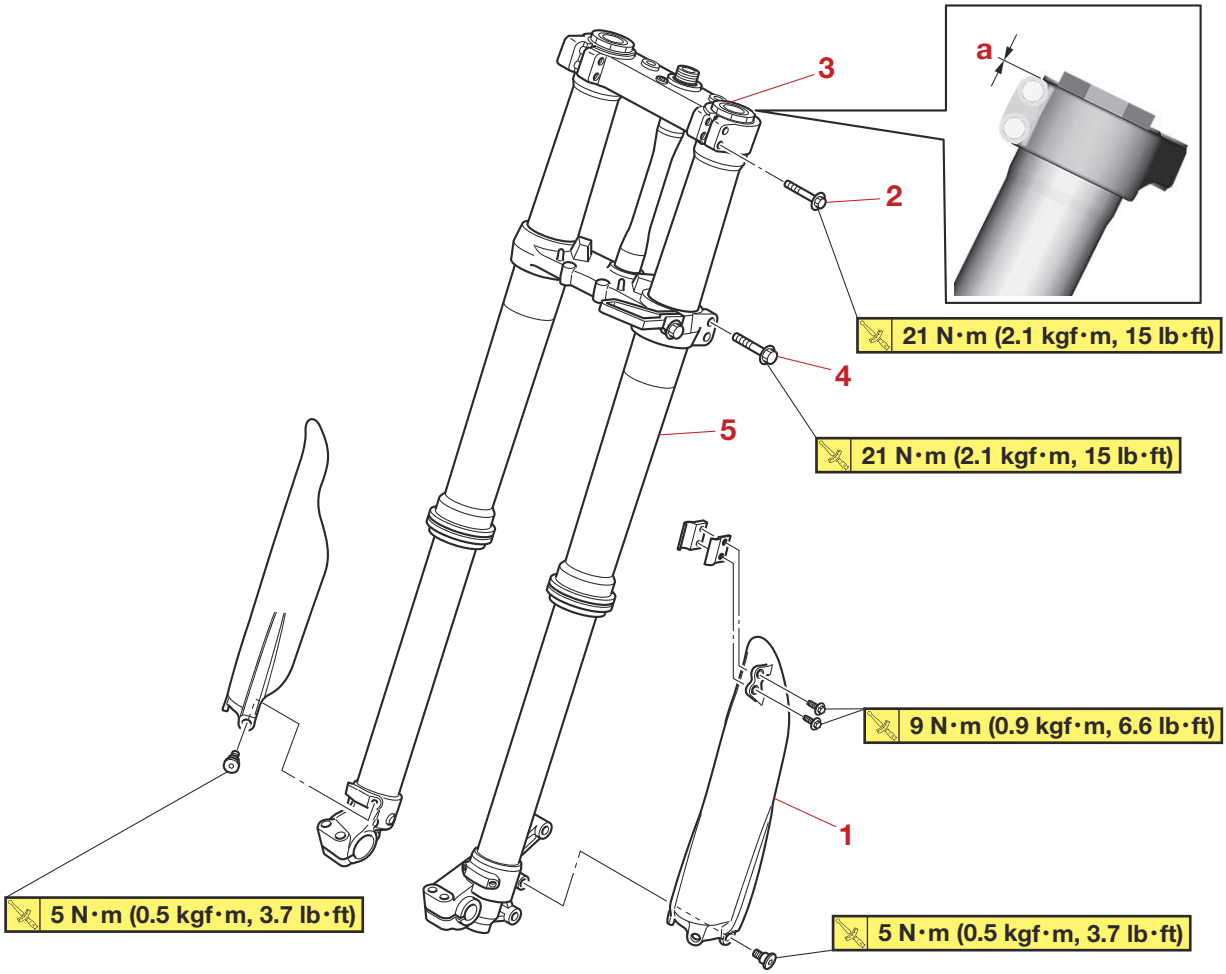

Order	Job/Parts to remove	Q'ty	Remarks
			Use a maintenance stand to raise the front wheel off the ground.
	Front wheel		Refer to "FRONT WHEEL" on page 4-3.
	Front brake caliper		Refer to "FRONT BRAKE" on page 4-13.
	Number plate		Refer to "GENERAL CHASSIS" on page 4-1.
1	Protector	1	
2	Upper bracket pinch bolt	2	Loosen.
3	Damper assembly	1	Loosen.
4	Lower bracket pinch bolt	2	Loosen.
5	Front fork leg	1	["a" = 0 mm (0.0 in)]

Disassembling the front fork leg

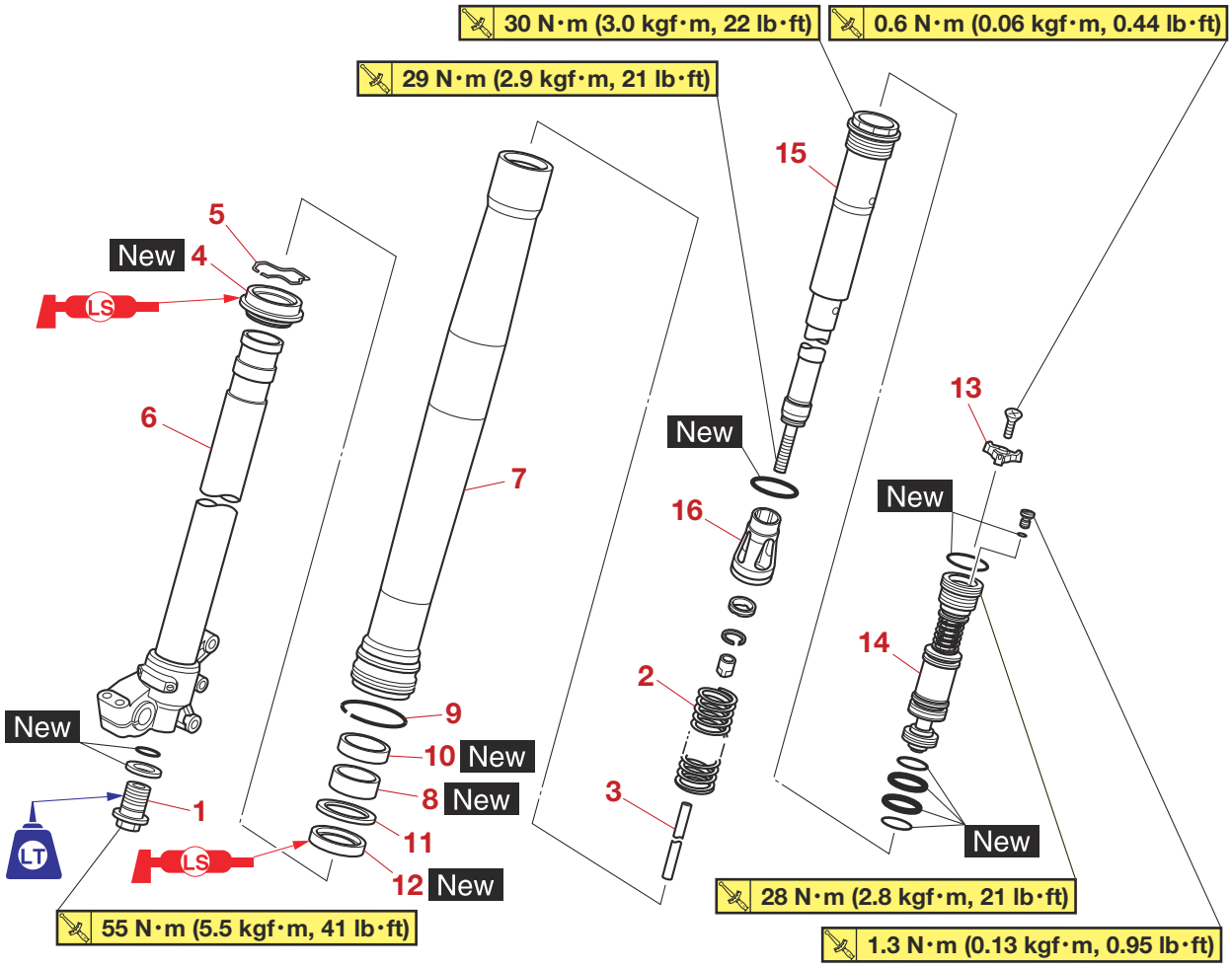

Order	Job/Parts to remove	Q'ty	Remarks
1	Adjuster	1	
2	Fork spring	1	
3	Damper adjusting rod	1	
4	Dust seal	1	
5	Stopper ring	1	
6	Inner tube	1	
7	Outer tube	1	
8	Piston metal	1	
9	Protector guide	1	
10	Slide metal	1	
11	Washer	1	
12	Oil seal	1	
13	Adjuster knob	1	
14	Base valve	1	
15	Damper assembly	1	
16	Upper spring seat	1	

EAM30055

REMOVING THE FRONT FORK LEGS

1. Use a maintenance stand to raise the front wheel off the ground.

EWA13120

WARNING

Securely support the vehicle so that there is no danger of it falling over.

TIP

Record the adjusting screw setting position before loosening the adjuster and the base valve.

2. Loosen:
   - Upper bracket pinch bolt
   - Damper assembly
   - Lower bracket pinch bolt

EWA20350

WARNING

Before loosening the upper and lower bracket pinch bolts, support the front fork leg.

TIP

Before removing the front fork leg from the vehicle, loosen the damper assembly "1" with the cap bolt ring wrench "2".

Cap bolt ring wrench
90890-01501
Cap bolt ring wrench
YM-01501

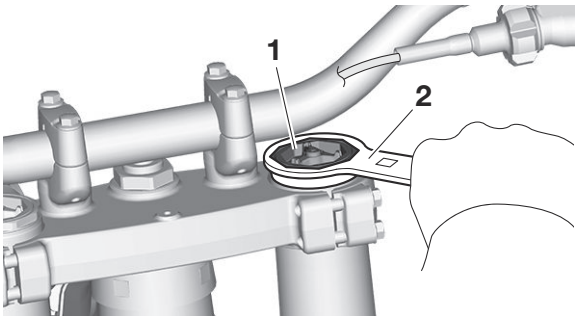

3. Remove:
   - Front fork leg

EAM30056

DISASSEMBLING THE FRONT FORK LEGS

1. Drain:
   - Fork oil
2. Remove:
   - Adjuster "1"
     (from the inner tube)

TIP

- While compressing the inner tube "2", set the cap bolt ring wrench "4" between the inner tube and locknut "3".
- Hold the locknut and remove the adjuster.

ECA24520

NOTICE

Do not remove the locknut as the damper rod may go into the damper assembly and not be taken out.

Cap bolt ring wrench
90890-01501
Cap bolt ring wrench
YM-01501

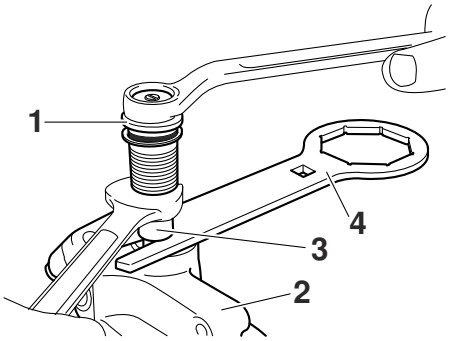

3. Remove:
   - Dust seal "1"
   - Stopper ring "2"
     (with a flat-head screwdriver)

ECA14180

NOTICE

Do not scratch the inner tube.

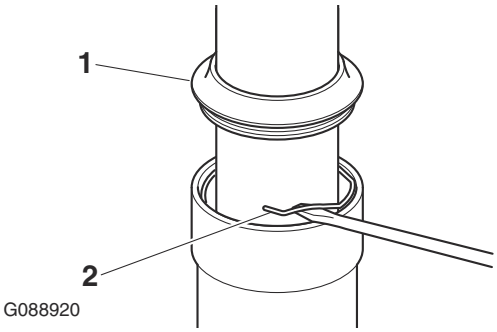

4. Remove:
   - Inner tube "1"
     a. Push in slowly "a" the inner tube just before it bottoms out and then pull it back quickly "b".
     b. Repeat this step until the inner tube can be pulled out from the outer tube.

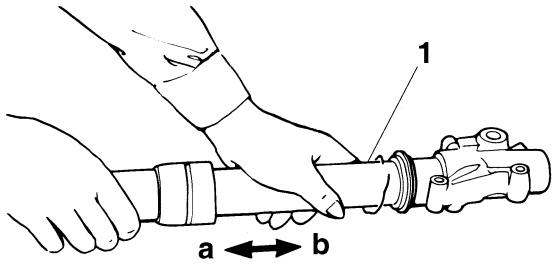

5. Remove:
   - Adjuster knob
   - Base valve "1"
     (from the damper assembly)

TIP

- Before loosening the damping force adjuster, record the setting position.
- Unless the damping force adjuster is fully loosened, correct damping characteristic cannot be obtained after installation.
- Hold the damper assembly with the cap bolt ring wrench "2" and use the cap bolt wrench "3" to remove the base valve.

	Cap bolt wrench **90890-01911** **Cap bolt ring wrench** **90890-01501** **Cap bolt ring wrench** **YM-01501**

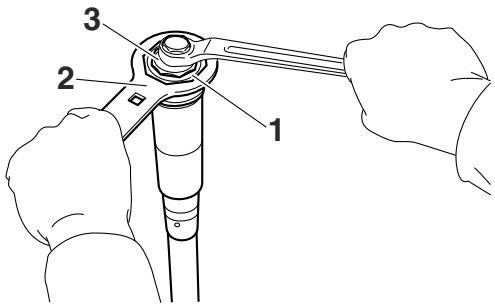

EAM30057

CHECKING THE FRONT FORK LEGS

1. Check:
   - Inner tube surface
     Scratches → Repair or replace.
     Use #1000 grit wet sandpaper.
     Damaged oil lock piece → Replace.
   - Inner tube bends
     Out of specification → Replace.
     Use the dial gauge.

	Inner tube bending limit **0.2 mm (0.01 in)**

TIP

The bending value is shown by one half of the dial gauge reading.

EWA13650

WARNING

Do not attempt to straighten a bent inner tube as this may dangerously weaken it.

2. Check:
   - Outer tube
     Scratches/wear/damage → Replace.
3. Measure:
   - Fork spring free length "a"
     Out of specification → Replace.

	Fork spring free length limit **492.0 mm (19.37 in)**

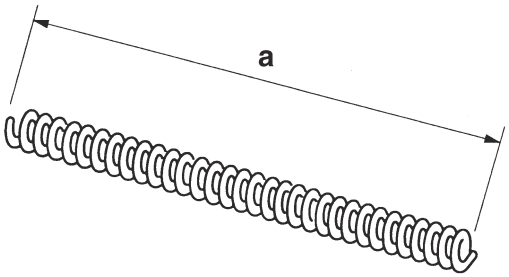

G088921

4. Check:
   - Damper assembly "1"
     Bend/damage → Replace.
   - O-ring "2"
     Wear/damage → Replace.

ECA14200

NOTICE

- **The front fork leg has a built-in damper adjusting rod and a very sophisticated internal construction, which are particularly sensitive to foreign material.**
- **When disassembling and assembling the front fork leg, do not allow any foreign material to enter the front fork.**

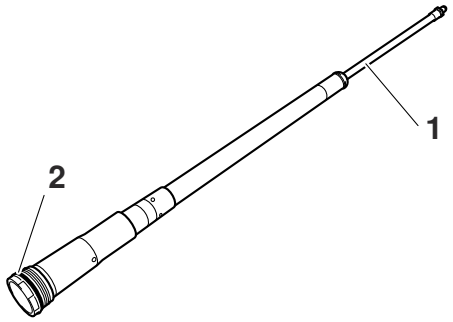

5. Check:
   - Base valve “1”
     Wear/damage → Replace.
     Contamination → Clean.
   - O-ring “2”
     Wear/damage → Replace.
   - Piston metal “3”
     Wear/damage → Replace.
   - Fork spring “4”
     Damage/fatigue → Replace base valve.
   - Bleed screw “5”
     Wear/damage → Replace.

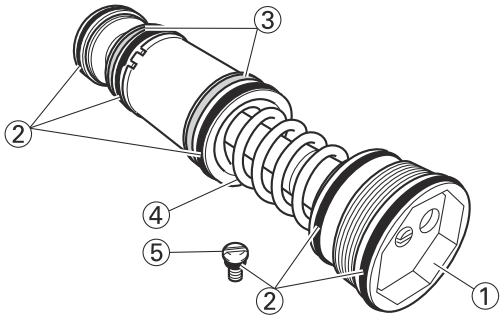

6. Check:
   - Upper spring seat “1”
     (contacting surface “a”)
     Wear/damage → Replace.

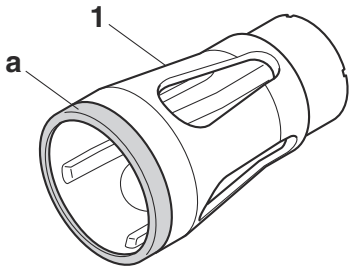

7. Check:
   - Adjuster “1”
   - O-ring “2”
     Wear/damage → Replace.

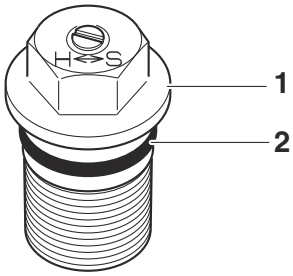

EAM30058

ASSEMBLING THE FRONT FORK LEGS

EWA13660

WARNING

- **Make sure the oil levels in both front fork legs are equal.**
- **Uneven oil levels can result in poor handling and a loss of stability.**

TIP

- When assembling the front fork leg, be sure to replace the following parts:
  - Inner tube bushing
  - Slide metal
  - Oil seal
  - Copper washer
- Before assembling the front fork leg, make sure that all of the components are clean.

1. Stretch the damper assembly fully.
2. Fill:
   - Damper assembly

Recommended oil
Yamaha Suspension Oil S1
Standard oil amount
205 cm³ (6.93 US oz, 7.21 Imp.oz)

ECA24530

NOTICE

- **Be sure to use the recommended oil. Other oils may have an adverse effect on front fork performance.**
- **When disassembling and assembling the front fork leg, take care not to allow any foreign material to enter the front fork.**

3. After filling, pump the damper assembly “1” slowly up and down (about 200 mm (7.9 in) stroke) several times to bleed the damper assembly of air.

TIP

Avoid excessive full stroke. A stroke of 200 mm (7.9 in) or more will cause air to enter. In this

case, repeat the steps (1) to (3).

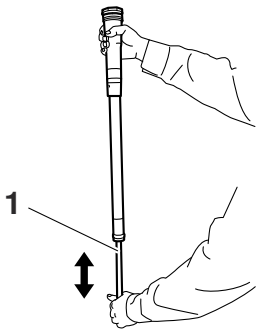

4. Measure:
   - Oil level (left and right) “a”
     Out of specification → Regulate.

	Standard oil level **145–148 mm (5.71–5.83 in)** **From top of fully stretched damper assembly.**

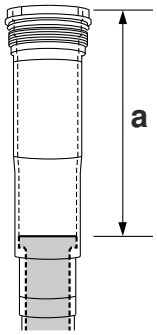

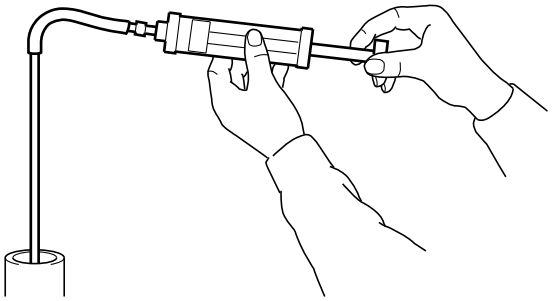

5. Tighten:
   - Locknut “1”

TIP

Fully finger tighten the locknut onto the damper assembly.

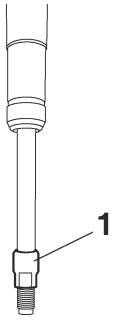

6. Install:
   - Base valve “1”
     (to the damper assembly “2”)

TIP

First bring the damper rod pressure to a maximum. Then install the base valve while releasing the damper rod pressure.

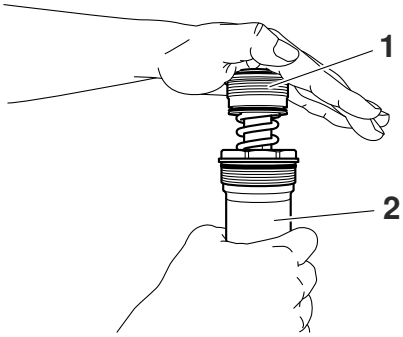

7. Check:
   - Damper assembly
     Not fully stretched → Repeat the steps (1) to (7).
8. Tighten:
   - Base valve “1”
   - Screw (adjuster knob)

	Base valve (front fork) **28 N·m (2.8 kgf·m, 21 lb·ft)** **Screw (adjuster knob)** **0.6 N·m (0.06 kgf·m, 0.44 lb·ft)**

TIP

Hold the damper assembly with the cap bolt ring wrench “2” and use the cap bolt wrench “3” to tighten the base valve.

	Cap bolt wrench **90890-01911** **Cap bolt ring wrench** **90890-01501** **Cap bolt ring wrench** **YM-01501**

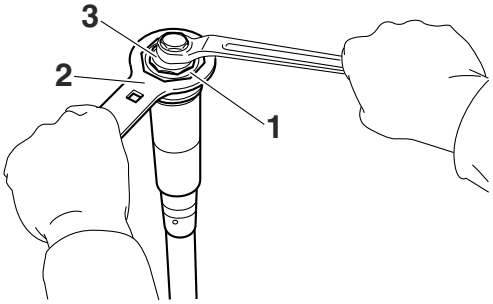

9. After filling, pump the damper assembly “1” slowly up and down more than 10 times to distribute the fork oil.

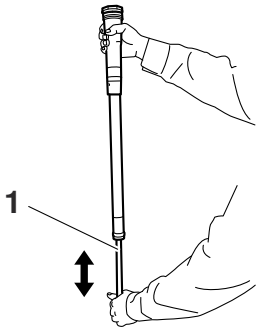

10. While protecting the damper assembly “1” with a cloth and compressing fully, allow excessive oil to overflow on the base valve side.

ECA24540

NOTICE

Take care not to damage the damper assembly.

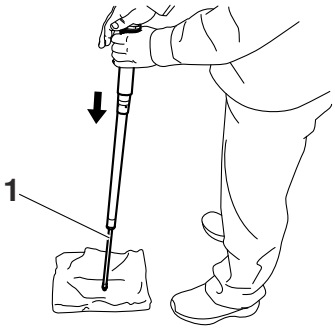

11. Allow the overflowing oil to escape at the hole “a” in the damper assembly.

TIP

The overflow measures about 10 cm^3 (0.34 US oz, 0.35 Imp.oz).

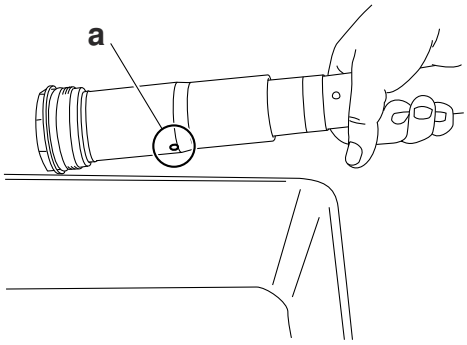

12. Check:
- Damper assembly smooth movement
  Tightness/binding/rough spots → Repeat the steps (1) to (12).

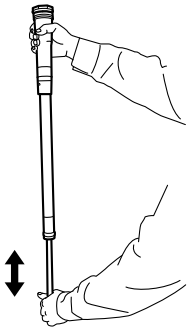

13. Install:
- Dust seal “1” New
- Stopper ring “2”
- Oil seal “3” New
- Washer “4”
- Slide metal “5” New
  (to the inner tube “6”)

ECA24550

NOTICE

Make sure that the numbered side of the oil seal faces bottom side.

TIP

- Apply the lithium-soap-based grease on the dust seal lip and oil seal lip.
- Apply the fork oil on the inner tube.
- When installing the oil seal, use vinyl seat with fork oil applied to protect the oil seal lip.

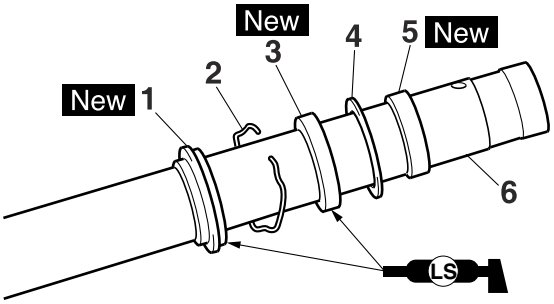

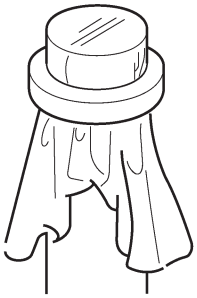

G088922

14. Install:
- Piston metal "1" New

TIP

Install the piston metal onto the slot on inner tube.

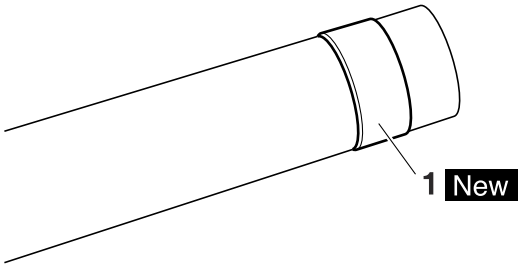

15. Install:
- Outer tube "1"
  (to the inner tube "2")

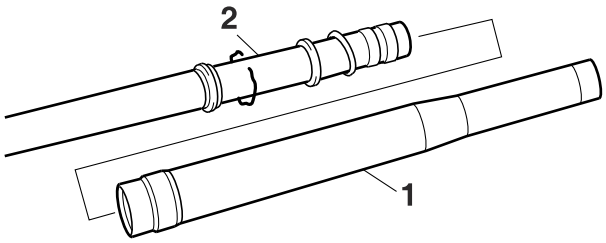

16. Install:
- Slide metal "1" New
- Washer "2"
  (to the outer tube)

TIP

Press the slide metal into the outer tube with fork seal driver "3".

	Fork seal driver **90890-01502** **Fork seal driver (48)** **YM-A0948**

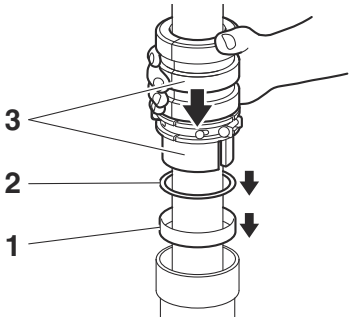

G088923

17. Install:
- Oil seal "1" New

TIP

Using a fork seal driver "2", press the oil seal in until the stopper ring groove fully appears.

	Fork seal driver **90890-01502** **Fork seal driver (48)** **YM-A0948**

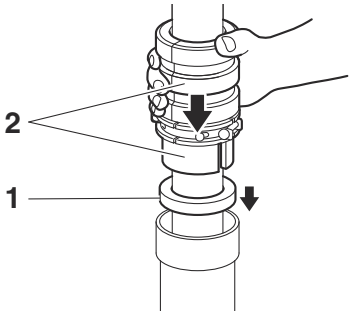

G088924

18. Install:
- Stopper ring "1"

TIP

Fit the stopper ring correctly in the groove in the outer tube.

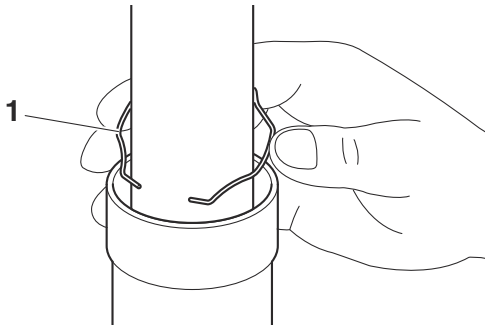

G088925

19. Install:
- Dust seal "1" New

TIP

Apply lithium-soap-based grease on the inner tube.

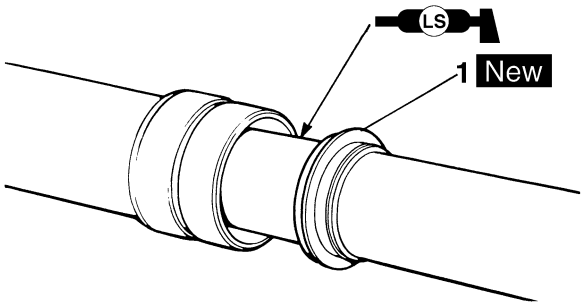

20. Check:
- Inner tube smooth movement
  Tightness/binding/rough spots → Repeat the steps (13) to (20).

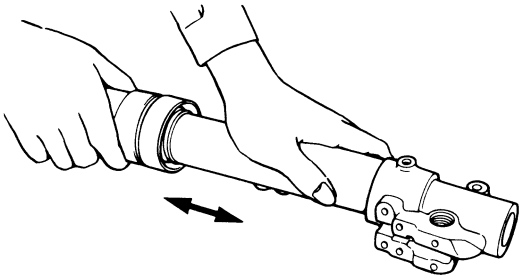

21. Measure:
- Distance "a"
  Out of specification → Turn the locknut to specification.

	Distance "a" **16 mm (0.63 in) or more** **Between the damper assembly "1" bottom and locknut "2" bottom.**

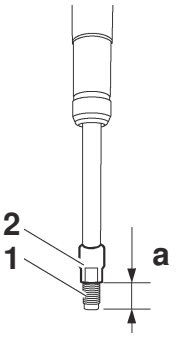

22. Install:
- Upper spring seat "1"
- Fork spring "2"
  (to the damper assembly "3")

TIP

Install the upper spring seat with its larger dia. end "a" facing the fork spring.

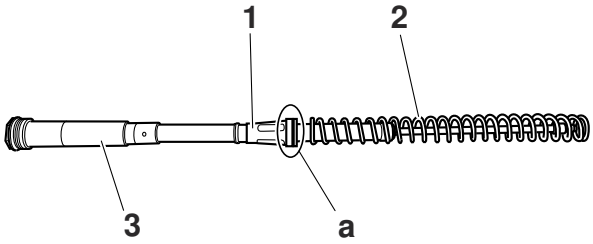

23. Install:
- Damper assembly "1"
  (to the inner tube "2")

ECA24560

NOTICE

Allow the damper assembly to slide slowly down the inner tube until it contacts the bottom of the inner tube. Be careful not to damage the inner tube.

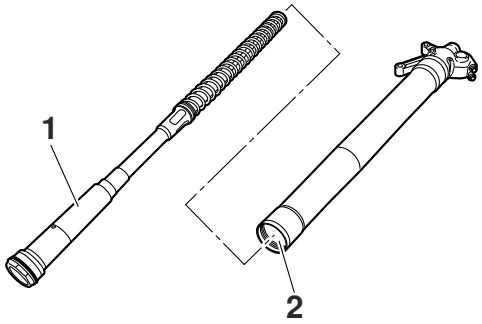

24. Loosen:
- Rebound damping force adjuster "1"

TIP

- Before loosening the damping force adjuster, record the setting position.
- Unless the damping force adjuster is fully loosened, correct damping characteristic cannot be obtained after installation.

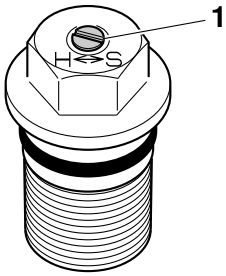

25. Install:
- Damper adjusting rod "1"
- Copper washer "2" New
- Adjuster "3"

(to the damper assembly “4”)

TIP

- While compressing the inner tube “5”, set the cap bolt ring wrench “7” between the inner tube and locknut “6”.
- Fully finger tighten the adjuster onto the damper assembly.

	Cap bolt ring wrench **90890-01501** **Cap bolt ring wrench** **YM-01501**

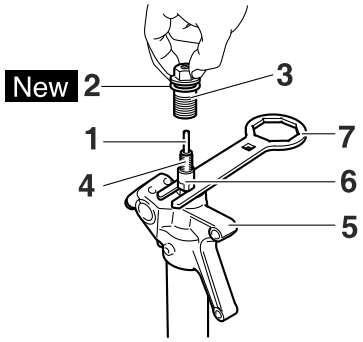

26. Measure:
    - Gap “a” between the adjuster “1” and the locknut “2”
      Out of specification → Retighten and readjust the locknut.

	Gap “a” between the adjuster and the locknut **0.5–1.0 mm (0.02–0.04 in)**

TIP

If it is installed with a gap out of specification, correct damping force cannot be obtained.

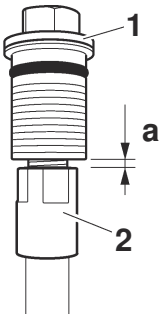

27. Tighten:
    - Adjuster (damper assembly) “1”

	Adjuster (damper assembly) **29 N·m (2.9 kgf·m, 21 lb·ft)**

TIP

Hold the locknut “2” and tighten the adjuster.

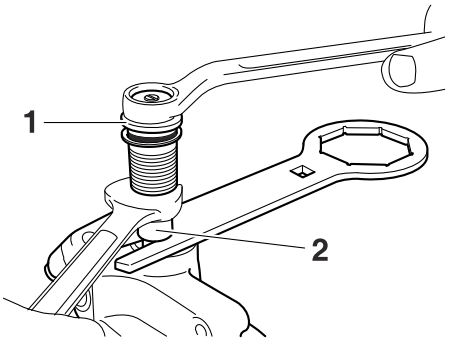

28. Install:
    - Adjuster “1”
      (to the inner tube)

	Adjuster **55 N·m (5.5 kgf·m, 41 lb·ft)** **LOCTITE®**

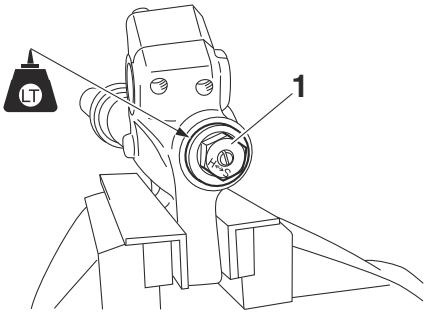

29. Fill:
    - Front fork leg

	Recommended oil **Yamaha Suspension Oil S1** **Standard oil amount** **310 cm³ (10.5 US oz, 10.9 Imp.oz)** **Extent of adjustment** **290–365 cm³ (9.8–12.3 US oz, 10.2–12.9 Imp.oz)**

ECA24570

NOTICE

- **Be sure to use the recommended oil. Other oils may have an adverse effect on front fork performance.**
- **When disassembling and assembling the front fork leg, do not allow any foreign material to enter the front fork.**

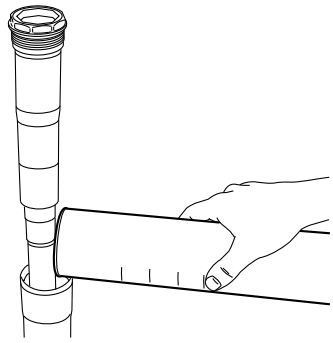

30. Install:
   - Damper assembly "1" (to the outer tube)

TIP

Temporarily tighten the damper assembly.

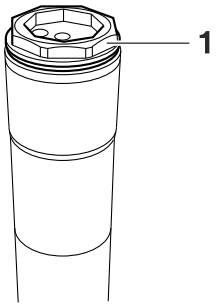

31. Install:
   - Protector guide "1"

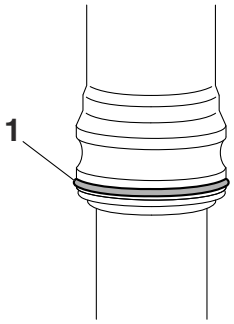

EAM30059

INSTALLING THE FRONT FORK LEGS

1. Install:
   - Front fork "1"

TIP

- Temporarily tighten the lower bracket pinch bolts.
- Do not tighten the upper bracket pinch bolts yet.

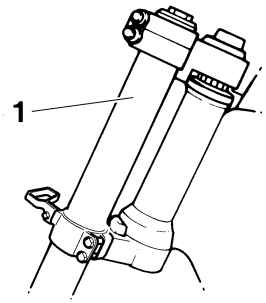

2. Tighten:
   - Damper assembly "1"

	Damper assembly (front fork) **30 N·m (3.0 kgf·m, 22 lb·ft)**

TIP

Use the cap bolt ring wrench "2" to tighten the damper assembly.

	Cap bolt ring wrench **90890-01501** **Cap bolt ring wrench** **YM-01501**

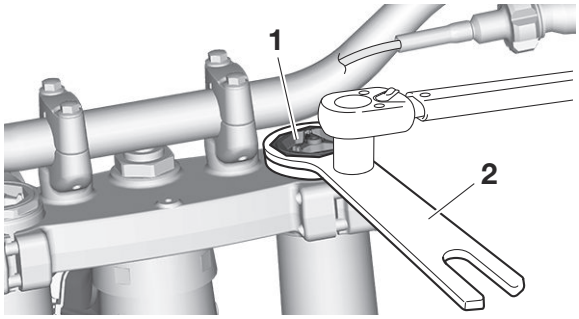

3. Adjust:
   - Front fork top end "a"

	Front fork top end (standard) "a" **0 mm (0.0 in)**

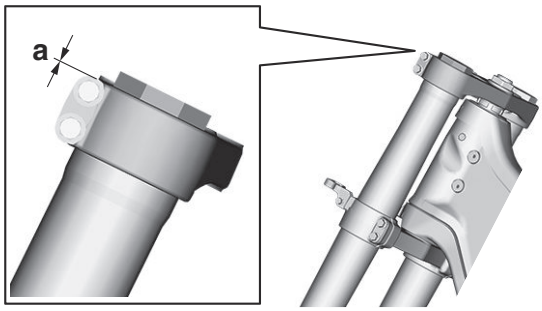

4. Tighten:
   - Upper bracket pinch bolt "1"

	Upper bracket pinch bolt 21 N·m (2.1 kgf·m, 15 lb·ft)

- Lower bracket pinch bolt “2”

	Lower bracket pinch bolt 21 N·m (2.1 kgf·m, 15 lb·ft)

EWA19320

WARNING

Tighten the lower bracket to specified torque. If torqued too much, it may cause the front fork to malfunction.

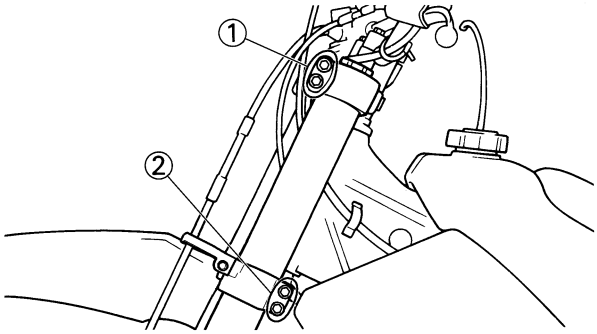

5. Install:
   - Protector “1”
   - Front fork protector bolt “2”

	Front fork protector bolt 5 N·m (0.5 kgf·m, 3.7 lb·ft)

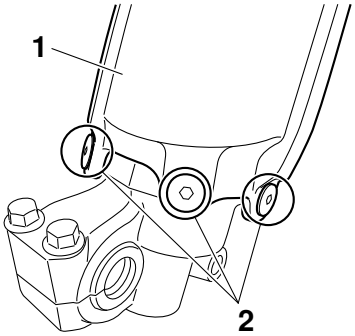

6. Adjust:
   - Rebound damping force

TIP

Turn in the damping adjuster “1” finger-tight and then turn out to the originally set position.

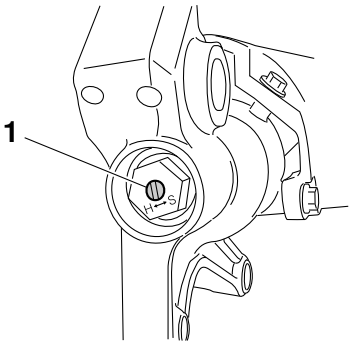

7. Adjust:
   - Compression damping force

TIP

Turn in the damping adjuster “1” finger-tight and then turn out to the originally set position.

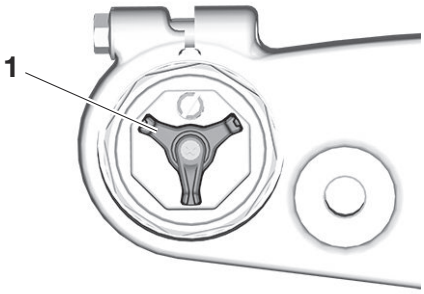

EAM20101

STEERING HEAD

Removing the lower bracket

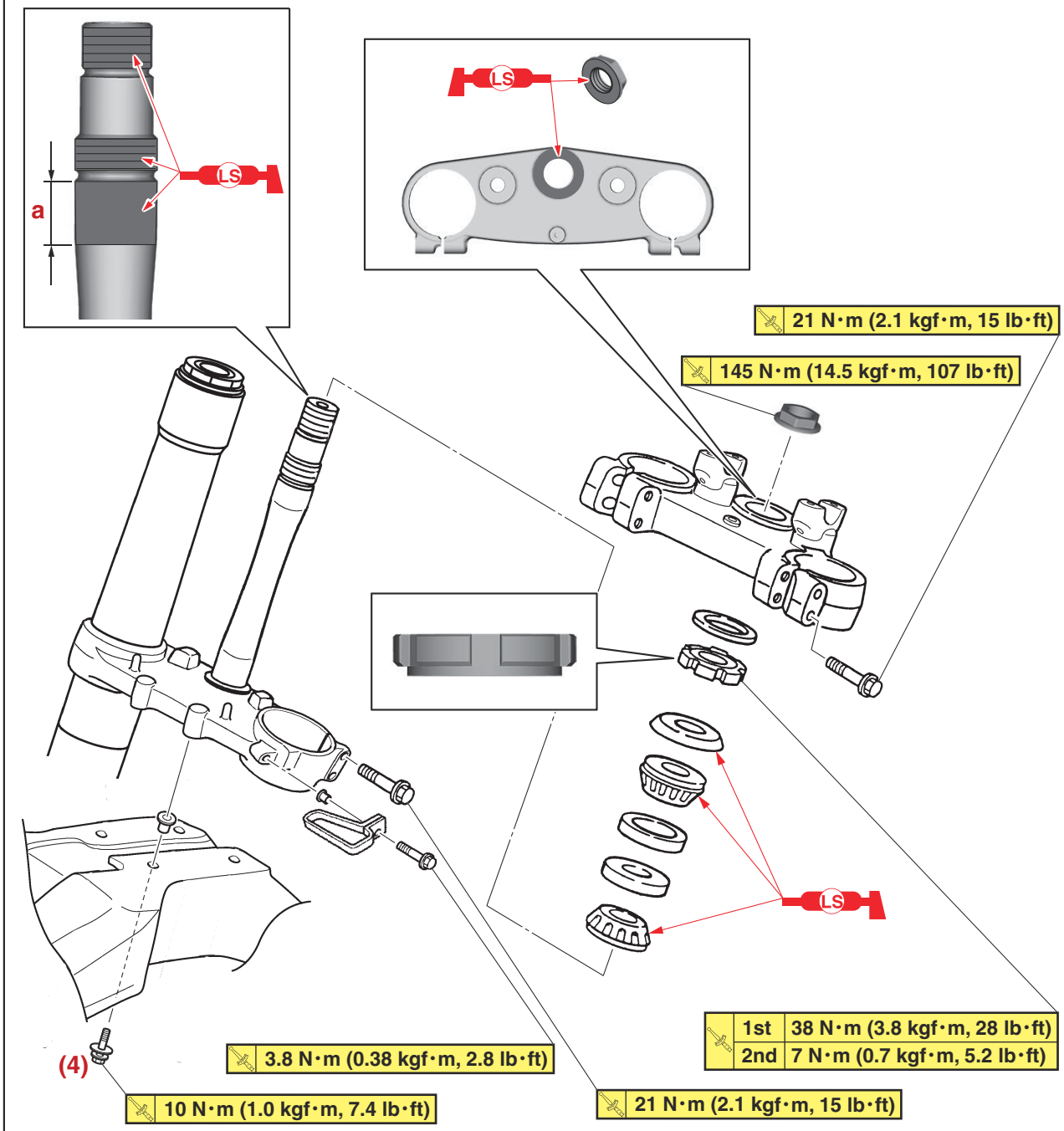

Order	Job/Parts to remove	Q'ty	Remarks
			Refer to "CHECKING AND ADJUSTING THE STEERING HEAD" on page 3-18.
			Use a maintenance stand to raise the front wheel off the ground.
	Number plate		Refer to "GENERAL CHASSIS" on page 4-1.
	Handlebar		Refer to "HANDLEBAR" on page 4-35.

Removing the lower bracket

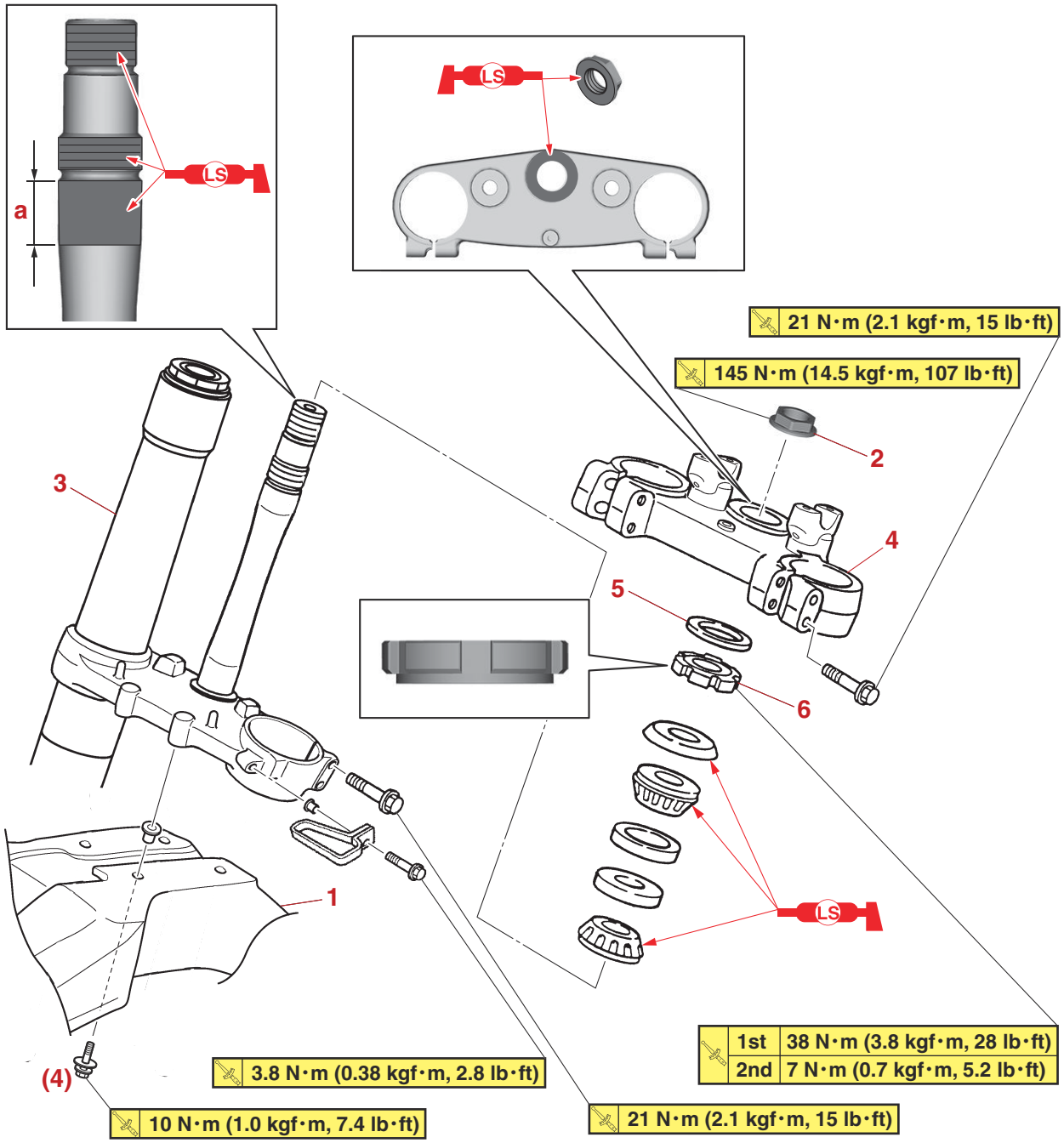

Order	Job/Parts to remove	Q'ty	Remarks
1	Front fender	1	
2	Steering stem nut	1	
3	Front fork leg	2	
4	Upper bracket	1	
5	Washer	1	
6	Steering ring nut	1	

Removing the lower bracket

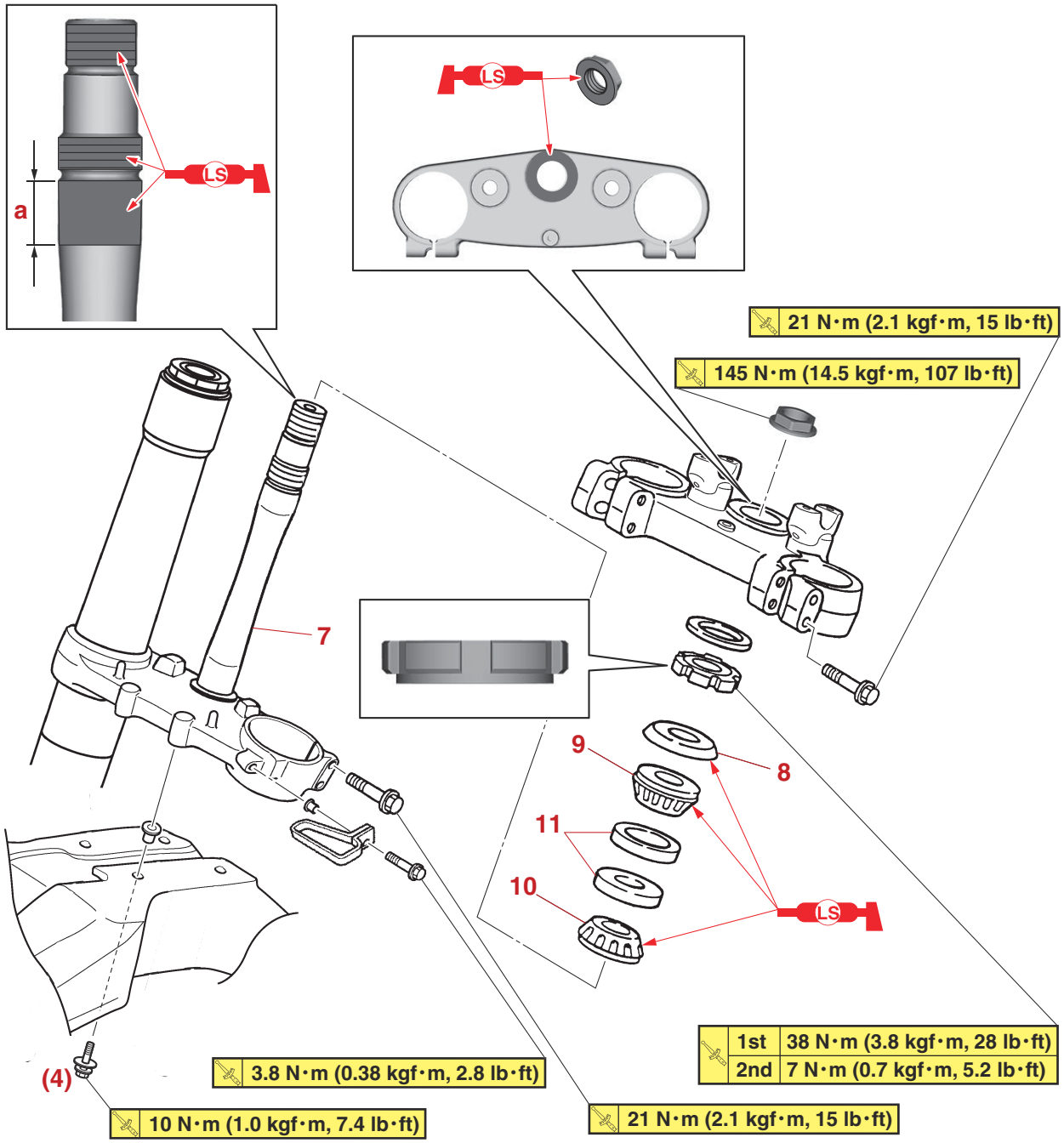

Order	Job/Parts to remove	Q'ty	Remarks
7	Lower bracket	1	["a" = Approx. 20.0 mm (0.79 in)]
8	Bearing race cover	1	
9	Upper bearing	1	
10	Lower bearing	1	
11	Bearing race	2	

EAM30060

REMOVING THE LOWER BRACKET

1. Use a maintenance stand to raise the front wheel off the ground.

EWA13120

WARNING

Securely support the vehicle so that there is no danger of it falling over.

2. Remove:
   - Ring nut "1"

TIP

Remove the ring nut with the steering nut wrench "2".

	Steering nut wrench **90890-01403** **Exhaust flange nut wrench** **YU-A9472**

EWA13730

WARNING

Securely support the lower bracket so that there is no danger of it falling.

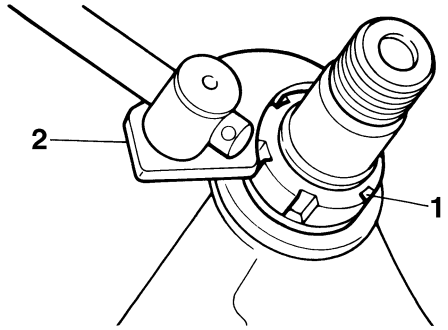

EAM30061

CHECKING THE STEERING HEAD

1. Wash with kerosene:
   - Bearing
   - Bearing race
2. Check:
   - Bearing
   - Bearing race
     Damage/pitting → Replace.
3. Replace:
   - Bearing
   - Bearing race
     a. Remove the bearing race from the steering head pipe "1" with a long rod "2" and a hammer.
     b. Remove the bearing race from the lower bracket "3" with a chisel "4" and a hammer.
     c. Install a new bearing race.

ECA14270

NOTICE

If the bearing race is not installed properly, the steering head pipe could be damaged.

TIP

Always replace the bearing and the bearing race as a set.

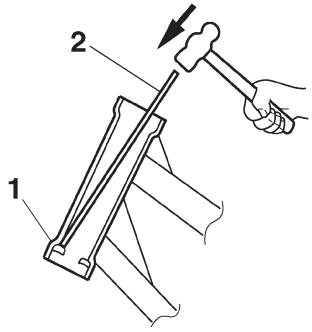

G088933

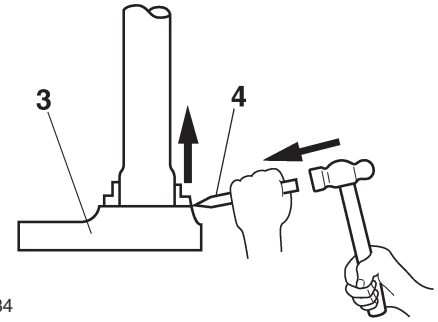

G088934

4. Check:
   - Upper bracket
   - Lower bracket
     (along with the steering stem)
     Bends/cracks/damage → Replace.

EAM30062

INSTALLING THE STEERING HEAD

1. Install:
   - Lower bearing "1"

TIP

Apply the lithium-soap-based grease on the dust seal lip and bearing inner circumference.

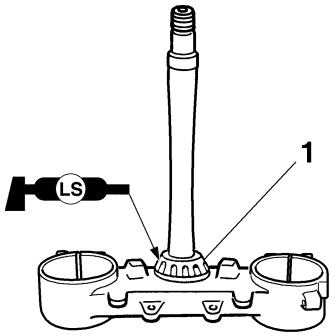

2. Install:
   - Bearing race

- Upper bearing “1”
- Bearing race cover “2”

TIP

Apply the lithium-soap-based grease on the bearing and bearing race cover lip.

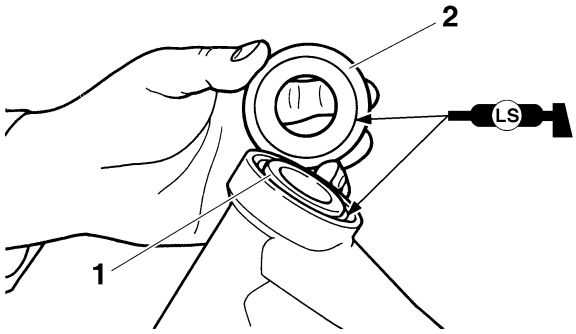

3. Install:
   - Lower bracket “1”

TIP

Apply the lithium-soap-based grease on the bearing, the portion “a” and thread of the steering stem.

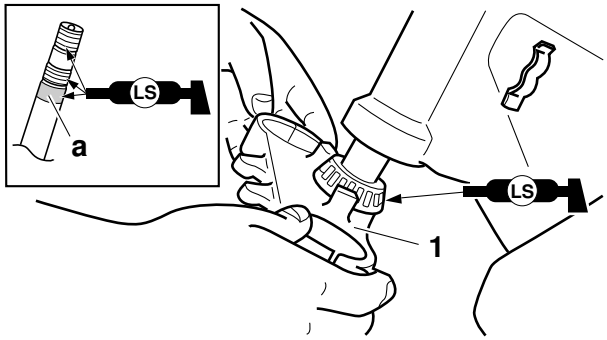

4. Install:
   - Steering ring nut “1”

	Steering ring nut **7 N·m (0.7 kgf·m, 5.2 lb·ft)**

TIP

Install the steering ring nut with its stepped side “a” facing downward.

Tighten the steering ring nut with a steering nut wrench “2”.
Refer to “CHECKING AND ADJUSTING THE STEERING HEAD” on page 3-18.

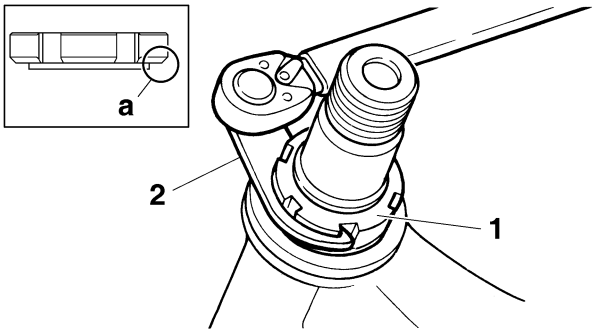

5. Check the steering stem by turning this lock to lock. If there is any binding, remove the steering stem and check the steering bearing.

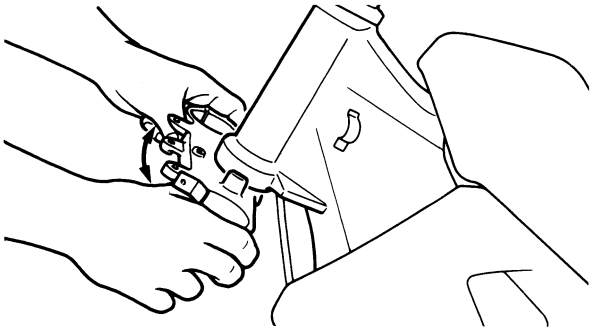

6. Install:
   - Washer “1”

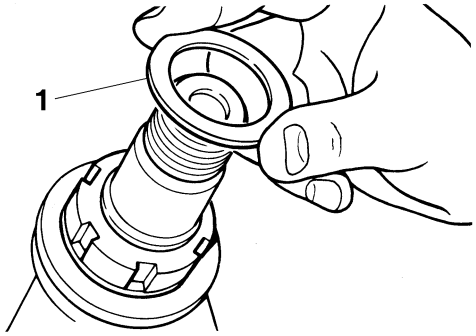

7. Install:
   - Front fork “1”
   - Upper bracket “2”

TIP

- Temporarily tighten the lower bracket pinch bolts.
- Do not tighten the upper bracket pinch bolts yet.

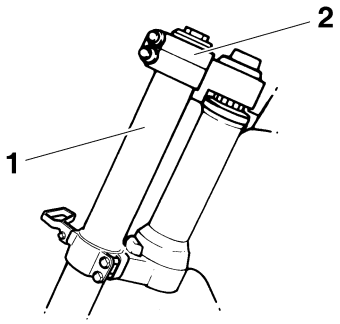

8. Install:
   - Steering stem nut "1"

	Steering stem nut **145 N·m (14.5 kgf·m, 107 lb·ft)**

TIP

Apply the lithium-soap-based grease to the contact surface of the steering stem nut when installing.

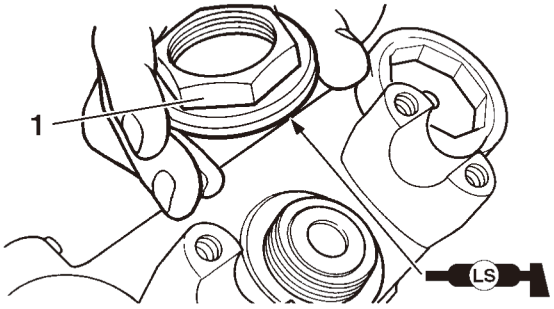

9. After tightening the nut, check the steering for smooth movement. If not, adjust the steering by loosening the steering ring nut little by little.
10. Adjust:
    - Front fork top end "a"

	Front fork top end (standard) "a" **0 mm (0.0 in)**

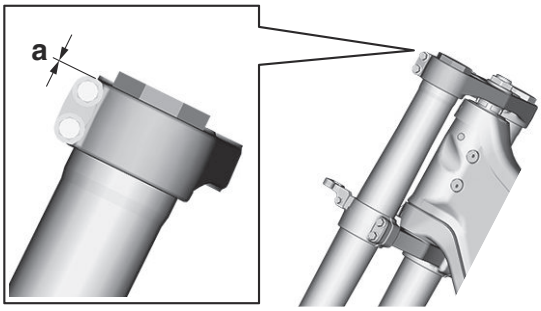

11. Tighten:
    - Upper bracket pinch bolt "1"

	Upper bracket pinch bolt **21 N·m (2.1 kgf·m, 15 lb·ft)**

- Lower bracket pinch bolt "2"

	Lower bracket pinch bolt **21 N·m (2.1 kgf·m, 15 lb·ft)**

EWA19330

WARNING

Tighten the lower bracket to specified torque. If torqued too much, it may cause the front fork to malfunction.

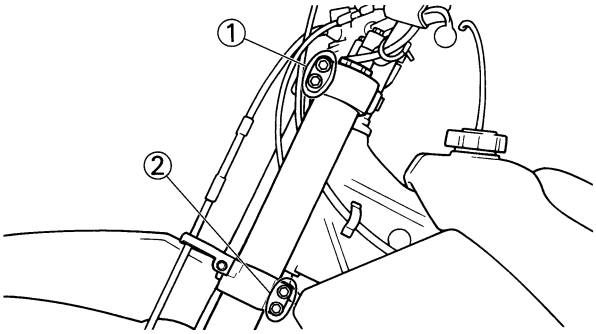

EAM20102

REAR SHOCK ABSORBER ASSEMBLY

Removing the rear shock absorber assembly

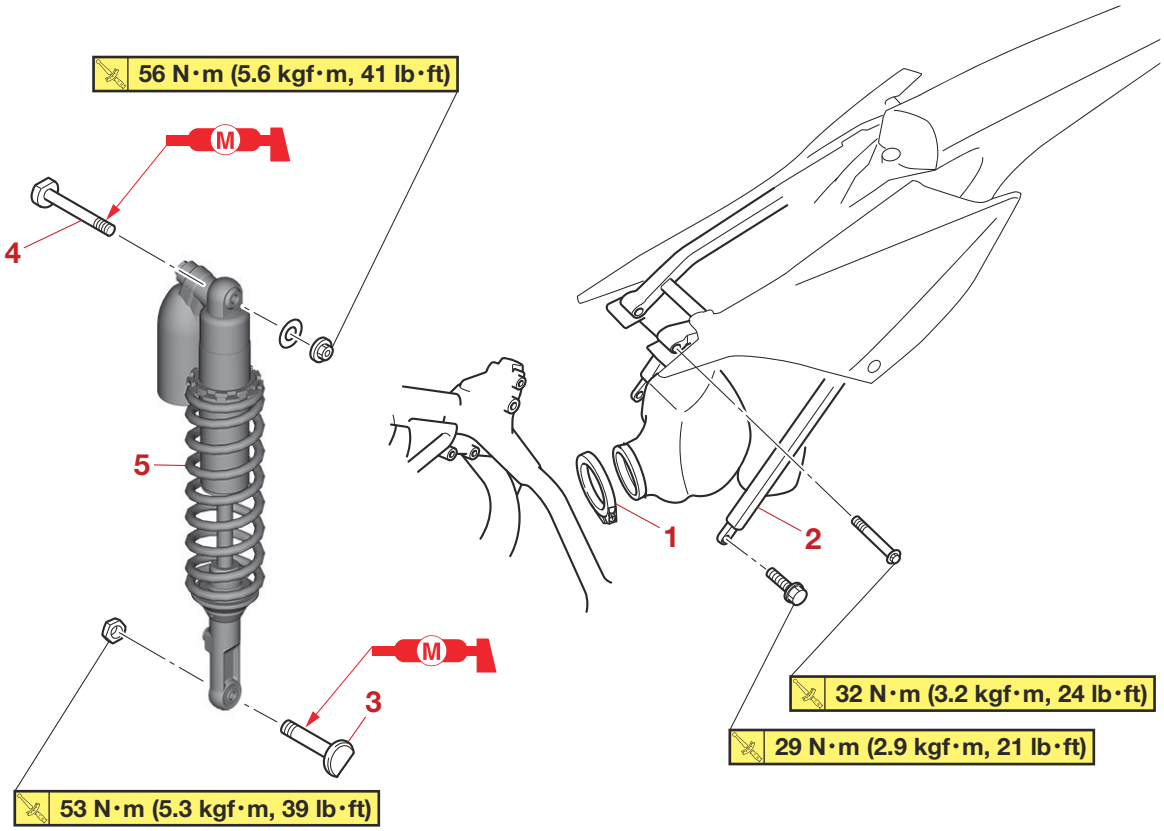

Order	Job/Parts to remove	Q'ty	Remarks
	Seat		Refer to "GENERAL CHASSIS" on page 4-1.
	Silencer		Refer to "ENGINE REMOVAL" on page 5-1.
1	Air filter case joint clamp	1	
2	Rear frame	1	
3	Rear shock absorber assembly lower bolt	1	
4	Rear shock absorber assembly upper bolt	1	
5	Rear shock absorber assembly	1	

Disassembling the rear shock absorber

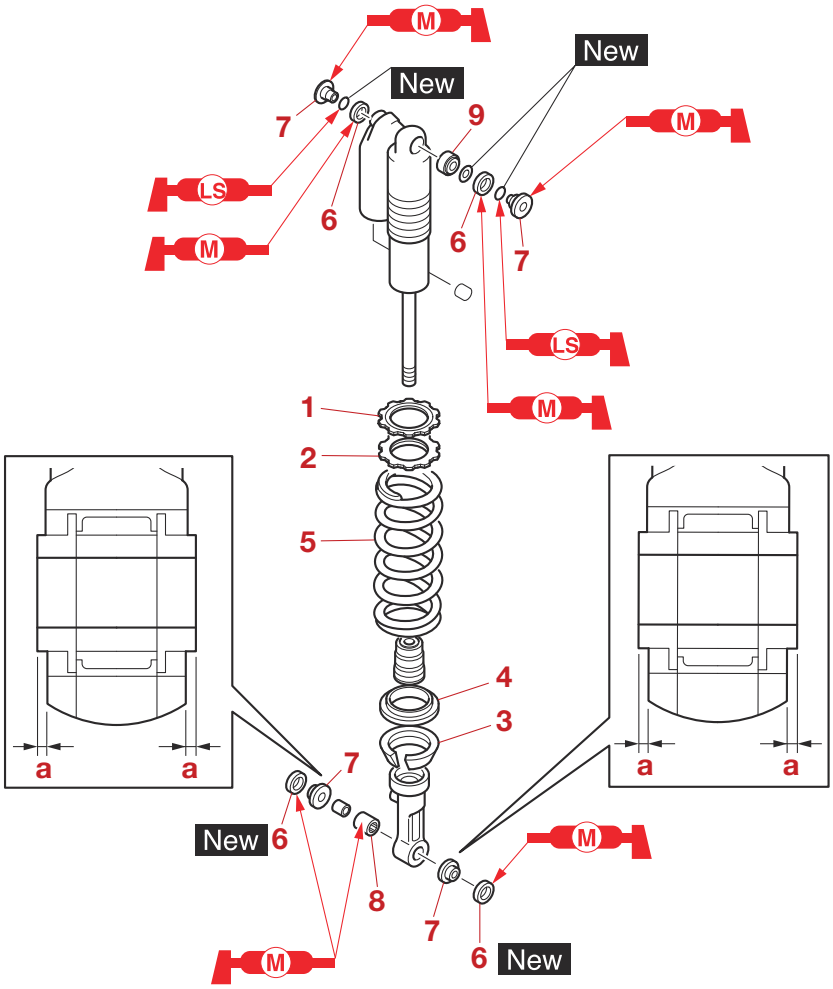

Order	Job/Parts to remove	Q'ty	Remarks
1	Locknut	1	
2	Adjusting nut	1	
3	Lower spring guide	1	
4	Upper spring guide	1	
5	Spring	1	
6	Dust seal	4	
7	Collar	4	["a" = 0.3 mm (0.01 in) or more]
8	Bearing	1	
9	Bushing	1	

Disassembling the relay arm

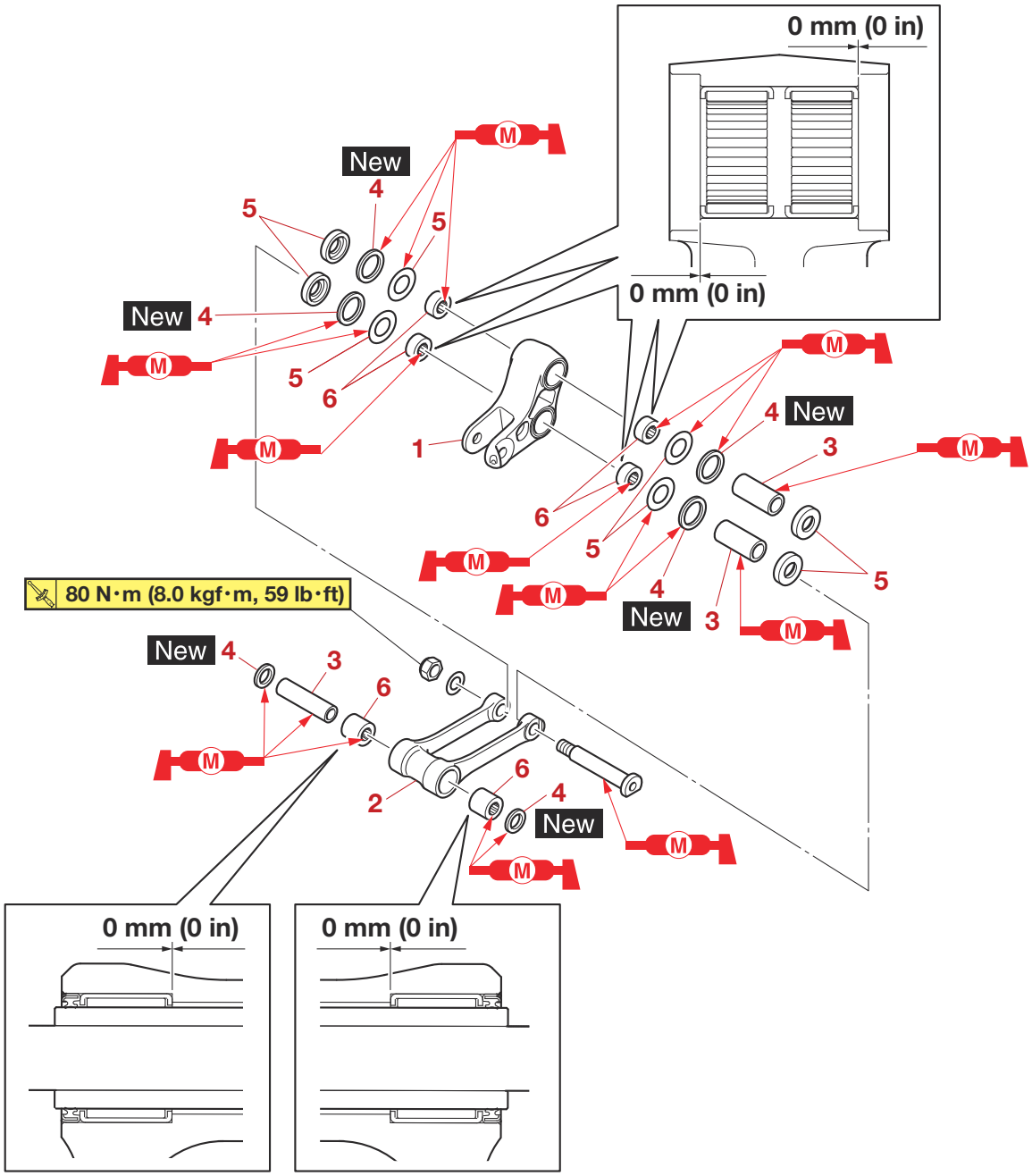

Order	Job/Parts to remove	Q'ty	Remarks
1	Relay arm	1	
2	Connecting arm	1	
3	Collar	3	
4	Oil seal	6	
5	Washer	8	
6	Bearing	6	

EAM30063

HANDLING THE REAR SHOCK ABSORBER

EWA13740

WARNING

This rear shock absorber contains highly compressed nitrogen gas. Before handling the rear shock absorber, read and make sure you understand the following information. The manufacturer cannot be held responsible for property damage or personal injury that may result from improper handling of the rear shock absorber.

- **Do not tamper or attempt to open the rear shock absorber.**
- **Do not subject the rear shock absorber to an open flame or any other source of high heat. High heat can cause an explosion due to excessive gas pressure.**
- **Do not deform or damage the rear shock absorber in any way. Rear shock absorber damage will result in poor damping performance.**

TIP

A break-in is required up to about 50 km of running.

EAM30064

DISPOSING OF A REAR SHOCK ABSORBER

Before disposing the rear shock absorber, be sure to extract the nitrogen gas from valve "1".

EWA19340

WARNING

- **Wear protective glasses to prevent your eyes from damage due to possible gas or metal chips scattered.**
- **To dispose of a damaged or a worn-out rear shock absorber, take the unit to your Yamaha dealer for this disposal procedure.**

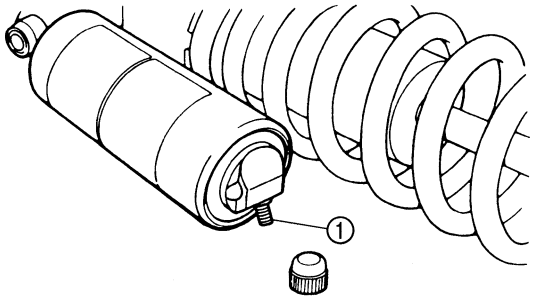

EAM30065

REMOVING THE REAR SHOCK ABSORBER ASSEMBLY

1. Use a maintenance stand to raise the rear wheel off the ground.

EWA13120

WARNING

Securely support the vehicle so that there is no danger of it falling over.

2. Remove:
   - Rear shock absorber assembly lower bolt "1"

TIP

While removing the rear shock absorber assembly lower bolt, hold the swingarm so that it does not drop down.

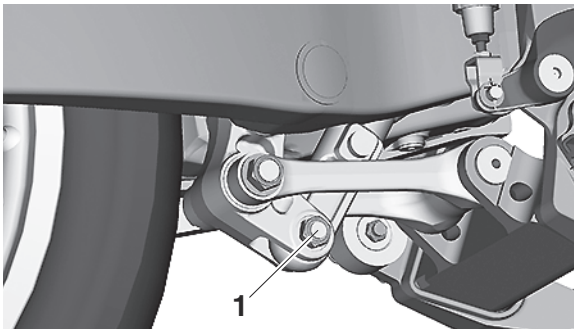

3. Remove:
   - Rear shock absorber assembly upper bolt
   - Rear shock absorber assembly

EAM30067

CHECKING THE REAR SHOCK ABSORBER ASSEMBLY

1. Check:
   - Rear shock absorber rod
     Bends/damage → Replace the rear shock absorber assembly.
   - Rear shock absorber
     Gas leaks/oil leaks → Replace the rear shock absorber assembly.
   - Spring
     Damage/wear → Replace.
   - Spring guide
     Damage/wear → Replace.
   - Bearing
     Damage/wear → Replace.
   - Bolt
     Bends/damage/wear → Replace.

EAM30068

CHECKING THE CONNECTING ARM AND RELAY ARM

1. Check:
   - Connecting arm
   - Relay arm
     Damage/wear → Replace.
2. Check:
   - Bearing

- Collar
  Damage/pitting/scratches → Replace the bearings and collars as a set.

3. Check:
   - Oil seal
     Damage/pitting → Replace.

EAM30069

INSTALLING THE RELAY ARM

1. Lubricate:
   - Oil seal
   - Bearing
   - Washer
   - Collar

	Recommended lubricant **Molybdenum disulfide grease**

2. Install:
   - Bearing "1"
   - Washer "2"
   - Oil seal "3" New
     (into the relay arm "4")
   - Collar "5"

	Installed depth "a" **0 mm (0 in)**

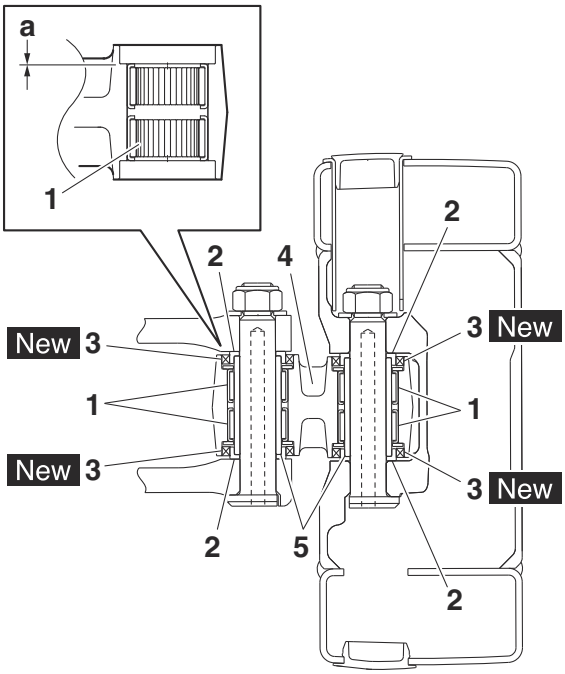

EAM30625

INSTALLING THE CONNECTING ARM

1. Install:
   - Bearing "1"
   - Oil seal "2" New
     (into the connecting arm "3")
   - Collar "4"

	Installed depth "a" **0 mm (0 in)**

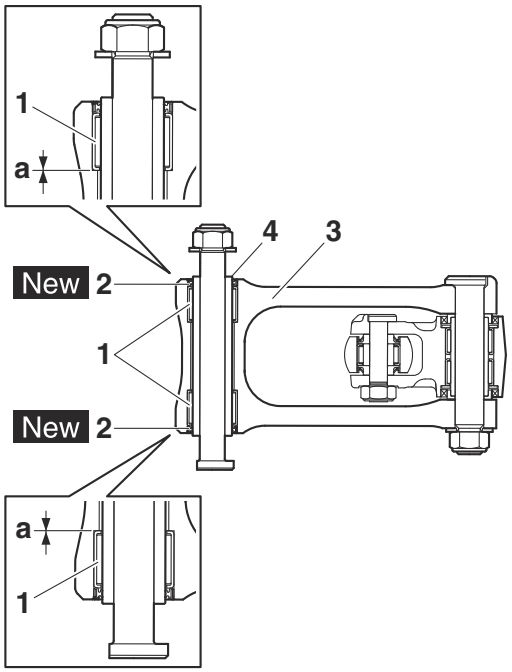

EAM30070

INSTALLING THE REAR SHOCK ABSORBER ASSEMBLY

1. Lubricate:
   - Bearing (lower side)
   - Dust seal
   - Collar

	Recommended lubricant **Molybdenum disulfide grease**

ECA24580

NOTICE

Do not apply the grease to the bearing outer race because it will wear the rear shock absorber surface on which the bearing is press fitted.

2. Lubricate:
   - O-ring

	Recommended lubricant **Lithium-soap-based grease**

3. Install:
   - Bearing
   - Stopper ring New
     (into the rear shock absorber assembly (upper side))

TIP
- Install the bearing parallel until the stopper ring groove appears by pressing its outer race.
- After installing the stopper ring, push back the bearing until it contacts the stopper ring.

4. Install:
   - Bearing "1"
   - Bushing "2"
   - Collar "3"
   - Dust seal "4" New
     (into the rear shock absorber assembly (lower side))

TIP
Install the dust seals with their lips facing inward.

	Installed depth "a" **0.3 mm (0.01 in) or more**

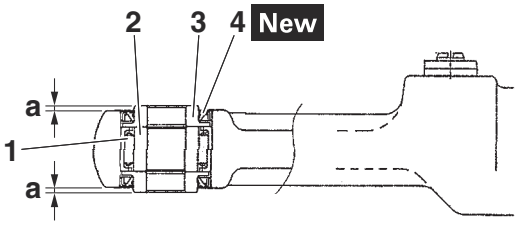

5. Lubricate:
   - Connecting arm and frame bolt
   - Relay arm and connecting arm bolt
   - Relay arm and swingarm bolt
     (circumference and threaded portion)
   - Rear shock absorber assembly upper bolt
   - Rear shock absorber assembly lower bolt

	Recommended lubricant **Molybdenum disulfide grease**

6. Install:
   - Rear shock absorber assembly

TIP
- When installing the rear shock absorber assembly, lift up the swingarm.
- Install the rear shock absorber assembly upper bolt, and connecting arm bolt (frame side) from the right.
- Install the rear shock absorber assembly lower bolts, connecting arm bolt (relay arm side), and relay arm bolt (swingarm side) from the left.

7. Tighten:
   - Rear shock absorber assembly upper nut

	Rear shock absorber assembly upper nut **56 N·m (5.6 kgf·m, 41 lb·ft)**

   - Connecting arm nut (frame side)

	Connecting arm nut (frame side) **80 N·m (8.0 kgf·m, 59 lb·ft)**

   - Connecting arm nut (relay arm side)

	Connecting arm nut (relay arm side) **80 N·m (8.0 kgf·m, 59 lb·ft)**

   - Relay arm nut (swingarm side)

	Relay arm nut (swingarm side) **70 N·m (7.0 kgf·m, 52 lb·ft)**

   - Rear shock absorber assembly lower nut

	Rear shock absorber assembly lower nut **53 N·m (5.3 kgf·m, 39 lb·ft)**

8. Install:
   - Rear frame "1"
   - Rear frame bolt (upper) "2"

	Rear frame bolt (upper) **32 N·m (3.2 kgf·m, 24 lb·ft)**

   - Rear frame bolt (lower) "3"

	Rear frame bolt (lower) **29 N·m (2.9 kgf·m, 21 lb·ft)**

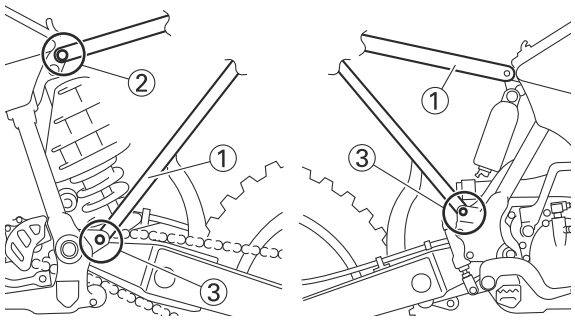

9. Tighten:
   - Air filter case joint clamp "1"

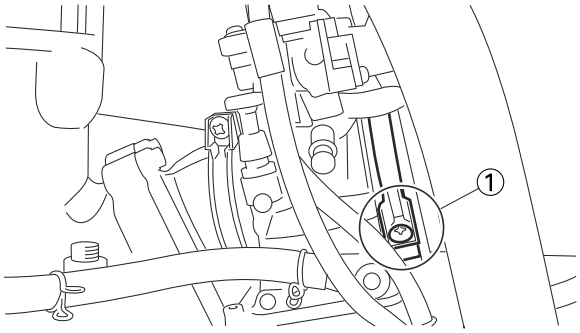
1

EAM20103

SWINGARM

Removing the swingarm

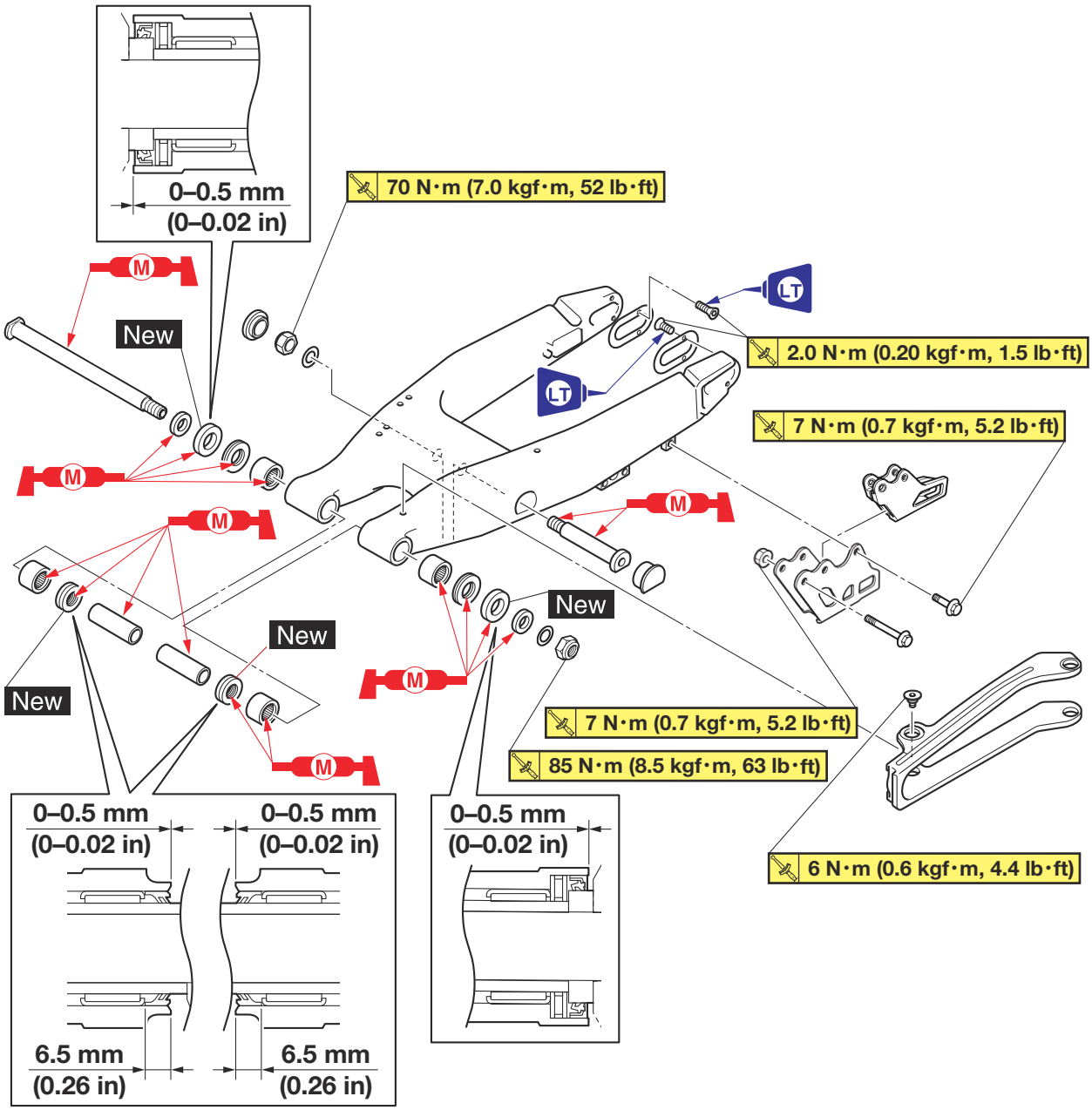

Order	Job/Parts to remove	Q'ty	Remarks
			Use a maintenance stand to raise the rear wheel off the ground.
	Brake hose holder		Refer to "REAR BRAKE" on page 4-24.
	Rear brake caliper		Refer to "REAR BRAKE" on page 4-24.
	Brake pedal bolt		Refer to "ENGINE REMOVAL" on page 5-1.
	Drive chain		Refer to "CHAIN DRIVE" on page 4-72.

Removing the swingarm

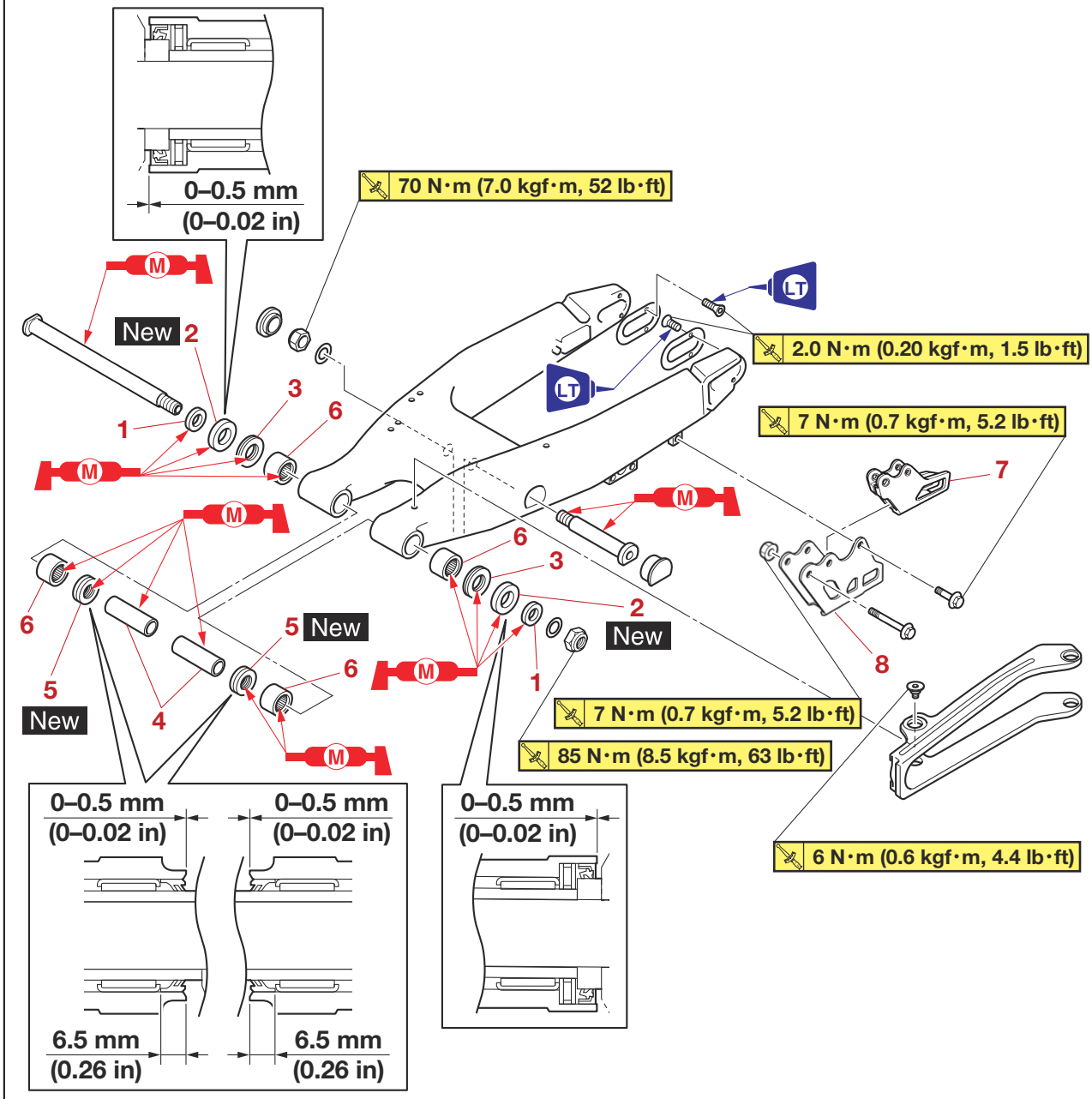

Order	Job/Parts to remove	Q'ty	Remarks
1	Collar	2	
2	Oil seal	2	
3	Thrust bearing	2	
4	Bushing	2	
5	Oil seal	2	
6	Bearing	4	
7	Drive chain support	1	
8	Drive chain support cover	1	

EAM30071

REMOVING THE SWINGARM

1. Use a maintenance stand to raise the rear wheel off the ground.

EWA13120

WARNING

Securely support the vehicle so that there is no danger of it falling over.

2. Measure:
   - Swingarm side play
   - Swingarm vertical movement
     a. Measure the tightening torque of the pivot shaft nut.

	Pivot shaft nut **85 N·m (8.5 kgf·m, 63 lb·ft)**

     b. Check the swingarm side play "A" by moving the swingarm from side to side.
     If the swingarm has side-to-side play, check the bushings, the bearings and the collars.
     c. Check the swingarm vertical movement "B" by moving the swingarm up and down.
     If swingarm vertical movement is not smooth or if there is binding, check the bushings, the bearings and the collars.

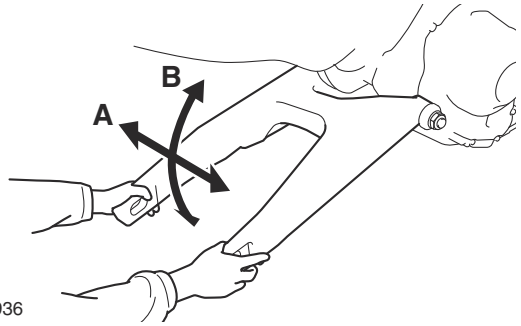

G088936

EAM30073

CHECKING THE SWINGARM

1. Check:
   - Swingarm
     Bends/cracks/damage → Replace.
2. Check:
   - Pivot shaft
     Roll the pivot shaft on a flat surface.
     Bends → Replace.

EWA13770

WARNING

Do not attempt to straighten a bent pivot shaft.

3. Wash with kerosene:
   - Pivot shaft
   - Bushing
   - Collar
   - Bearing
4. Check:
   - Oil seal
     Damage → Replace.
   - Bearing
   - Thrust bearing
   - Bushing
     Free play exists/unsmooth revolution/rust → Replace bearing and bushing as a set.

EAM30074

INSTALLING THE SWINGARM

1. Lubricate:
   - Bearing
   - Thrust bearing
   - Bushing
   - Collar
   - Oil seal
   - Pivot shaft

	Recommended lubricant **Molybdenum disulfide grease**

2. Install:
   - Bearing "1"
   - Oil seal "2" New
     (to the swingarm)
   - Collar "3"

	Installed depth "a" **0–0.5 mm (0–0.02 in)** **Installed depth "b"** **6.5 mm (0.26 in)**

TIP

First install the outer and then the inner bearings to a specified depth from inside.

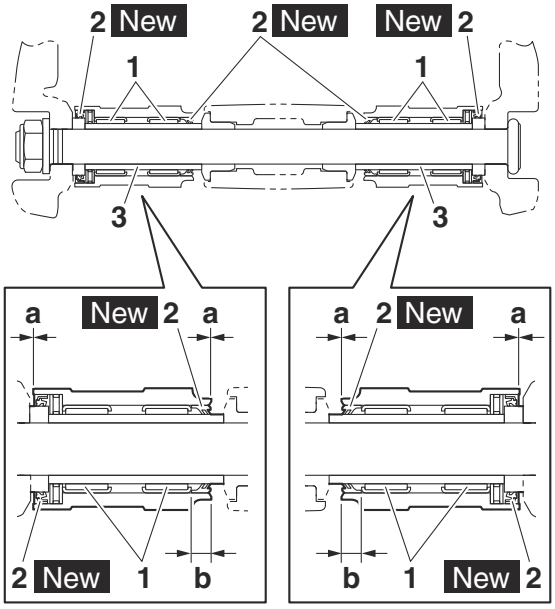

3. Install:
   - Swingarm

	Pivot shaft nut **85 N·m (8.5 kgf·m, 63 lb·ft)**

TIP

Install the pivot shaft from the right.

4. Install:
   - Rear wheel
     Refer to “REAR WHEEL” on page 4-8.
5. Adjust:
   - Drive chain slack
     Refer to “DRIVE CHAIN SLACK” on page 3-17.

	Drive chain slack (Maintenance Stand) **48.0–58.0 mm (1.89–2.28 in)**

EAM20104

CHAIN DRIVE

Removing the drive chain

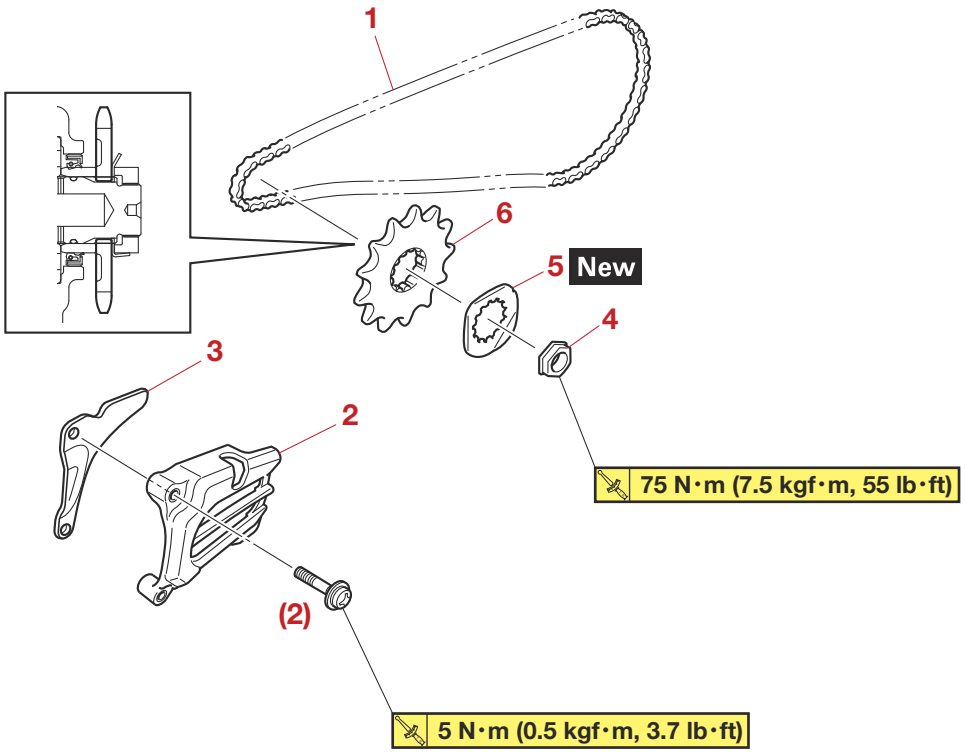

Order	Job/Parts to remove	Q'ty	Remarks
	Drive sprocket		Refer to "ENGINE REMOVAL" on page 5-1.
1	Drive chain	1	
2	Drive sprocket cover	1	
3	Bracket	1	
4	Drive sprocket nut	1	
5	Lock washer	1	
6	Drive sprocket	1	

EAM30075

REMOVING THE DRIVE CHAIN

1. Stand the vehicle on a level surface.

EWA13120

WARNING

Securely support the vehicle so that there is no danger of it falling over.

2. Remove:
   - Master link clip
   - Master link "1"
   - Master link plate "2"
   - Drive chain "3"

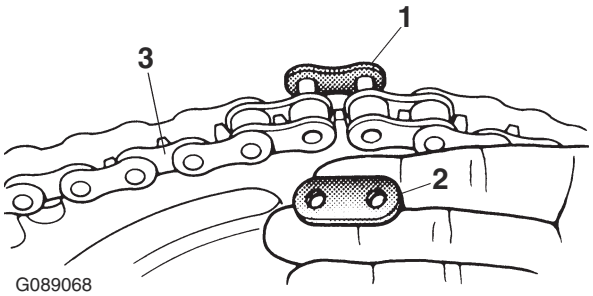

G089068

EAM30076

CHECKING THE DRIVE CHAIN

1. Measure:
   - 15-link section of the drive chain
     Out of specification → Replace the drive chain.

	15-link length limit **242.9 mm (9.56 in)**

   a. Measure the length "a" between the inner sides of the pins and the length "b" between the outer sides of the pins on a 15-link section of the drive chain as shown in the illustration.

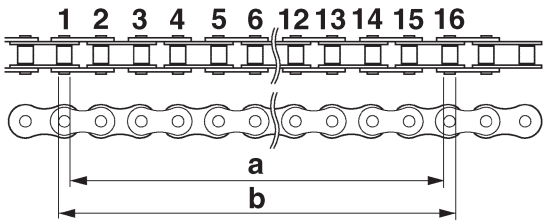

G088937

   b. Calculate the length "c" of the 15-link section of the drive chain using the following formula.
      Drive chain 15-link section length "c" = (length "a" between pin inner sides + length "b" between pin outer sides)/2

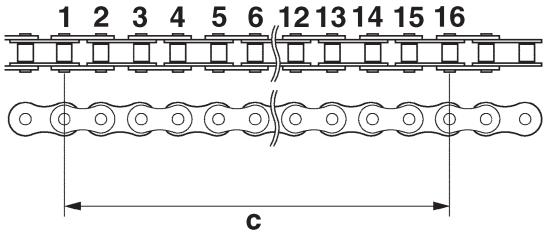

G088938

TIP

- When measuring a 15-link section of the drive chain, make sure that the drive chain is taut.
- Perform this procedure 2–3 times, at a different location each time.

2. Check:
   - Drive chain
     Stiffness → Clean, lubricate, or replace.

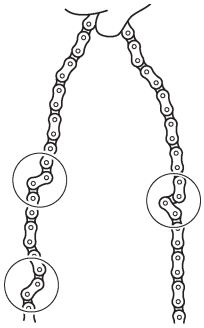

G088939

3. Clean:
   - Drive chain
     a. Wipe the drive chain with a clean cloth.
     b. Put the drive chain in kerosene and remove any remaining dirt.
     c. Remove the drive chain from the kerosene and completely dry it.

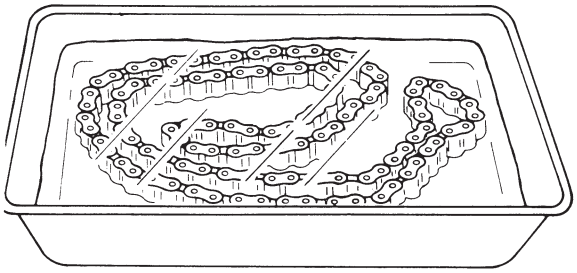

G088940

4. Check:
   - Drive chain roller "1"
     Damage/wear → Replace the drive chain.
   - Drive chain side plate "2"
     Damage/wear → Replace the drive chain.

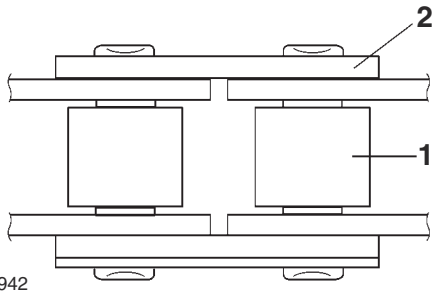

G088942

5. Lubricate:
   - Drive chain

EAM30077

CHECKING THE DRIVE SPROCKET

1. Check:
   - Drive sprocket
     More than 1/4 tooth wear "a" → Replace the drive sprocket and the rear wheel sprocket as a set.
     Bent tooth → Replace the drive sprocket and the rear wheel sprocket as a set.

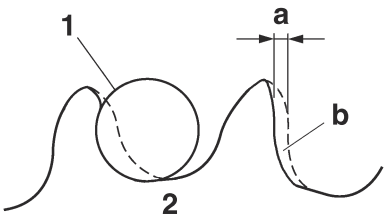

G088904

b. Correct

1. Drive chain roller
2. Drive sprocket

EAM30078

CHECKING THE REAR WHEEL SPROCKET

Refer to "CHECKING AND REPLACING THE REAR WHEEL SPROCKET" on page 4-10.

EAM30079

INSTALLING THE DRIVE CHAIN

1. Install:
   - Master link "1"
   - Master link plate "2"
   - Master link clip "3" New

ECA14310

NOTICE

- **The closed end of the master link clip must face in the direction of drive chain rotation.**
- **Never install a new drive chain onto worn drive chain sprockets; this will dramatically shorten the drive chain's life.**

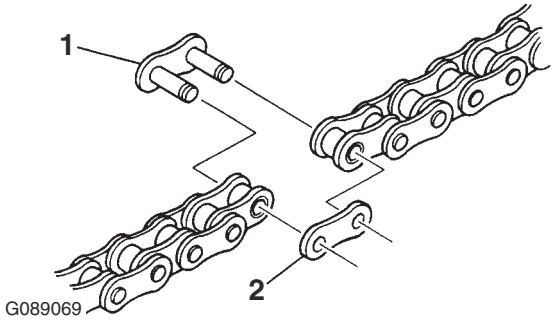

G089069

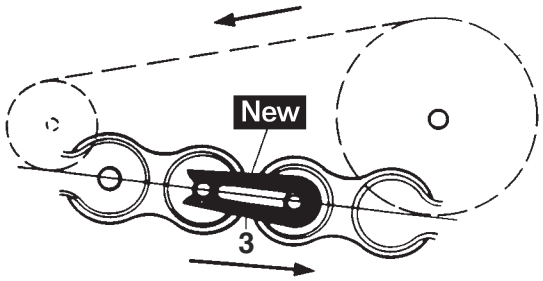

G089070

2. Lubricate:
   - Drive chain
3. Install:
   - Drive sprocket
   - Lock washer New
   - Drive sprocket nut
     Refer to "ENGINE REMOVAL" on page 5-1.

	Drive sprocket nut **75 N·m (7.5 kgf·m, 55 lb·ft)**

ECA14300

NOTICE

Never install a new drive chain onto worn drive chain sprockets; this will dramatically shorten the drive chain's life.

4. Adjust:
   - Drive chain slack
     Refer to "DRIVE CHAIN SLACK" on page 3-17.

	Drive chain slack (Maintenance Stand) **48.0–58.0 mm (1.89–2.28 in)**

ECA24590

NOTICE

A drive chain that is too tight will overload the engine and other vital parts, and one that is too loose can skip and damage the swingarm or cause an accident. Therefore, keep the drive chain slack within the specified limits.

ENGINE

ENGINE REMOVAL..... 5-1
REMOVING THE ENGINE..... 5-3
INSTALLING THE ENGINE..... 5-3

CYLINDER HEAD, CYLINDER AND PISTON.....5-4
REMOVING THE CYLINDER HEAD..... 5-6
REMOVING THE PUSH ROD..... 5-6
REMOVING THE PISTON.....5-6
CHECKING THE CYLINDER HEAD.....5-7
CHECKING THE CYLINDER AND PISTON.....5-7
COMBINATION OF PISTON AND CYLINDER.....5-8
CHECKING THE PISTON RING..... 5-9
CHECKING THE PISTON PIN..... 5-9
CHECKING THE SMALL END BEARING..... 5-10
CHECKING THE POWER VALVE..... 5-10
CHECKING THE POWER VALVE HOLE ON CYLINDER..... 5-10
ASSEMBLING THE POWER VALVE..... 5-10
INSTALLING THE PISTON AND CYLINDER..... 5-12
INSTALLING THE CYLINDER HEAD..... 5-14

CDI MAGNETO..... 5-15
REMOVING THE ROTOR..... 5-16
CHECKING THE CDI MAGNETO..... 5-16
CHECKING THE WOODRUFF KEY..... 5-16
INSTALLING THE CDI MAGNETO.....5-16

KICKSTARTER.....5-18
REMOVING THE PRIMARY DRIVE GEAR.....5-20
REMOVING THE KICK SHAFT ASSEMBLY..... 5-20
CHECKING THE KICK SHAFT AND RATCHET WHEEL..... 5-20
CHECKING THE KICK GEAR, KICK IDLE GEAR AND RATCHET WHEEL..... 5-20
INSTALLING THE KICK SHAFT ASSEMBLY.....5-20
INSTALLING THE KICK IDLE GEAR.....5-21
INSTALLING THE PRIMARY DRIVE GEAR..... 5-22
INSTALLING THE KICKSTARTER LEVER..... 5-22

YPVS GOVERNOR.....5-23
REMOVING THE GOVERNOR..... 5-24
CHECKING THE GOVERNOR GROOVE.....5-24
CHECKING THE BEARING..... 5-24
INSTALLING THE GOVERNOR..... 5-24

CLUTCH.....5-26
REMOVING THE CLUTCH..... 5-28
CHECKING THE FRICTION PLATES.....5-28
CHECKING THE CLUTCH PLATES.....5-28

CHECKING THE CLUTCH SPRINGS.....5-28
CHECKING THE CLUTCH HOUSING.....5-28
CHECKING THE CLUTCH BOSS.....5-28
CHECKING THE PRESSURE PLATE..... 5-29
CHECKING THE PUSH LEVER SHAFT.....5-29
CHECKING THE PUSH RODS.....5-29
CHECKING THE PRIMARY DRIVE GEAR.....5-29
CHECKING THE PRIMARY DRIVEN GEAR..... 5-29
INSTALLING THE CLUTCH.....5-29

SHIFT SHAFT.....5-33
REMOVING THE SEGMENT..... 5-34
CHECKING THE SHIFT SHAFT.....5-34
CHECKING THE STOPPER LEVER..... 5-34
INSTALLING THE SHIFT SHAFT.....5-34

CRANKCASE..... 5-37
DISASSEMBLING THE CRANKCASE.....5-39
CHECKING THE CRANKCASE..... 5-39
ASSEMBLING THE CRANKCASE.....5-39

CRANKSHAFT..... 5-41
REMOVING THE CRANKSHAFT.....5-42
CHECKING THE CRANKSHAFT..... 5-42
INSTALLING THE CRANKSHAFT.....5-42

TRANSMISSION..... 5-43
REMOVING THE TRANSMISSION.....5-44
CHECKING THE SHIFT FORKS.....5-44
CHECKING THE SHIFT DRUM ASSEMBLY..... 5-44
CHECKING THE TRANSMISSION..... 5-44
INSTALLING THE TRANSMISSION.....5-45

EAM20105

ENGINE REMOVAL

Removing the exhaust pipe

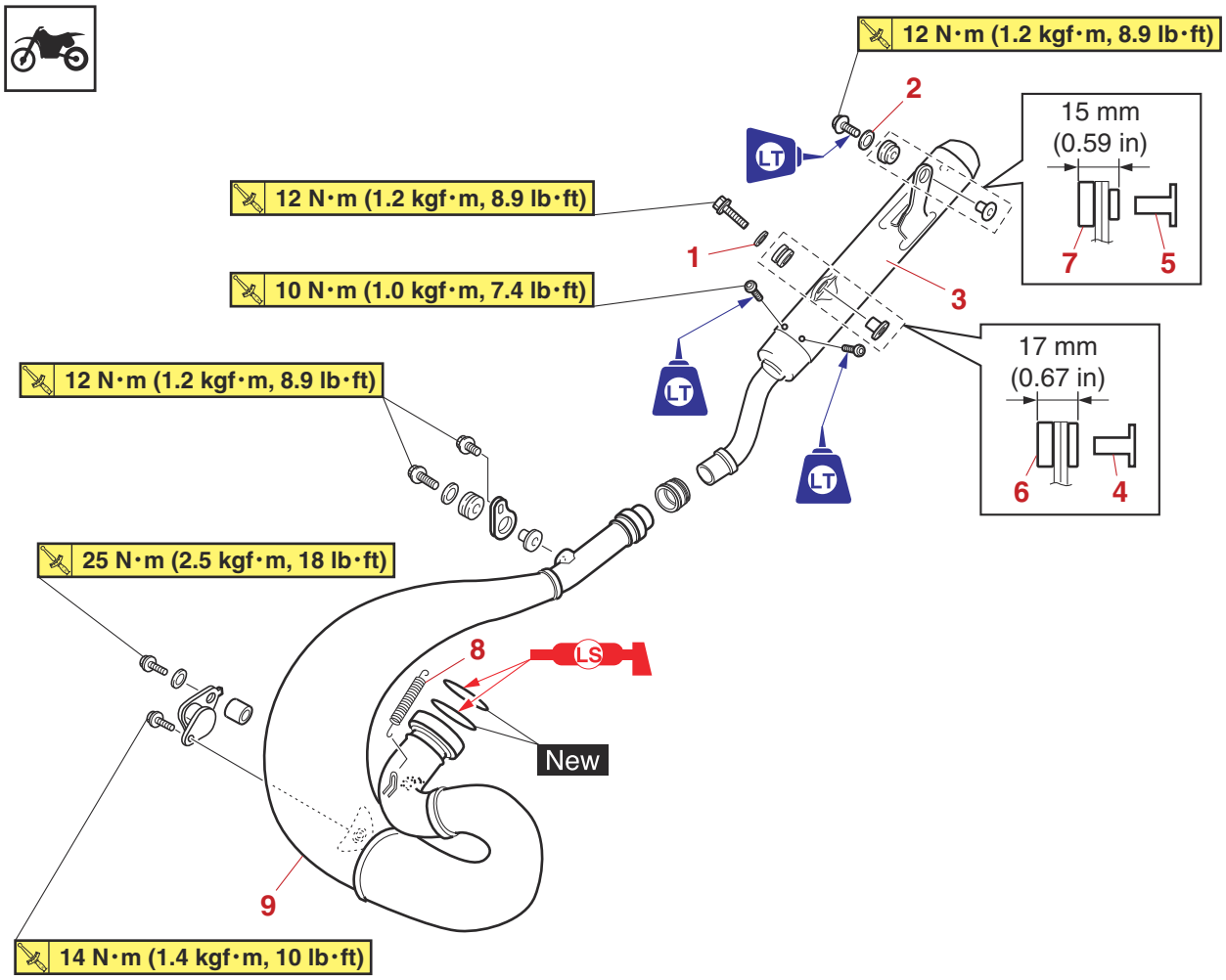

Order	Job/Parts to remove	Q'ty	Remarks
	Right side cover		Refer to "GENERAL CHASSIS" on page 4-1.
1	Washer	1	[ø = 26 mm (1.02 in)]
2	Washer	1	[ø = 22 mm (0.87 in)]
3	Silencer	1	
4	Collar	1	[L = 15.5 mm (0.61 in)]
5	Collar	1	[L = 13.5 mm (0.53 in)]
6	Grommet (front)	1	
7	Grommet (rear)	1	
8	Tension spring	2	
9	Exhaust pipe	1	

Removing the engine

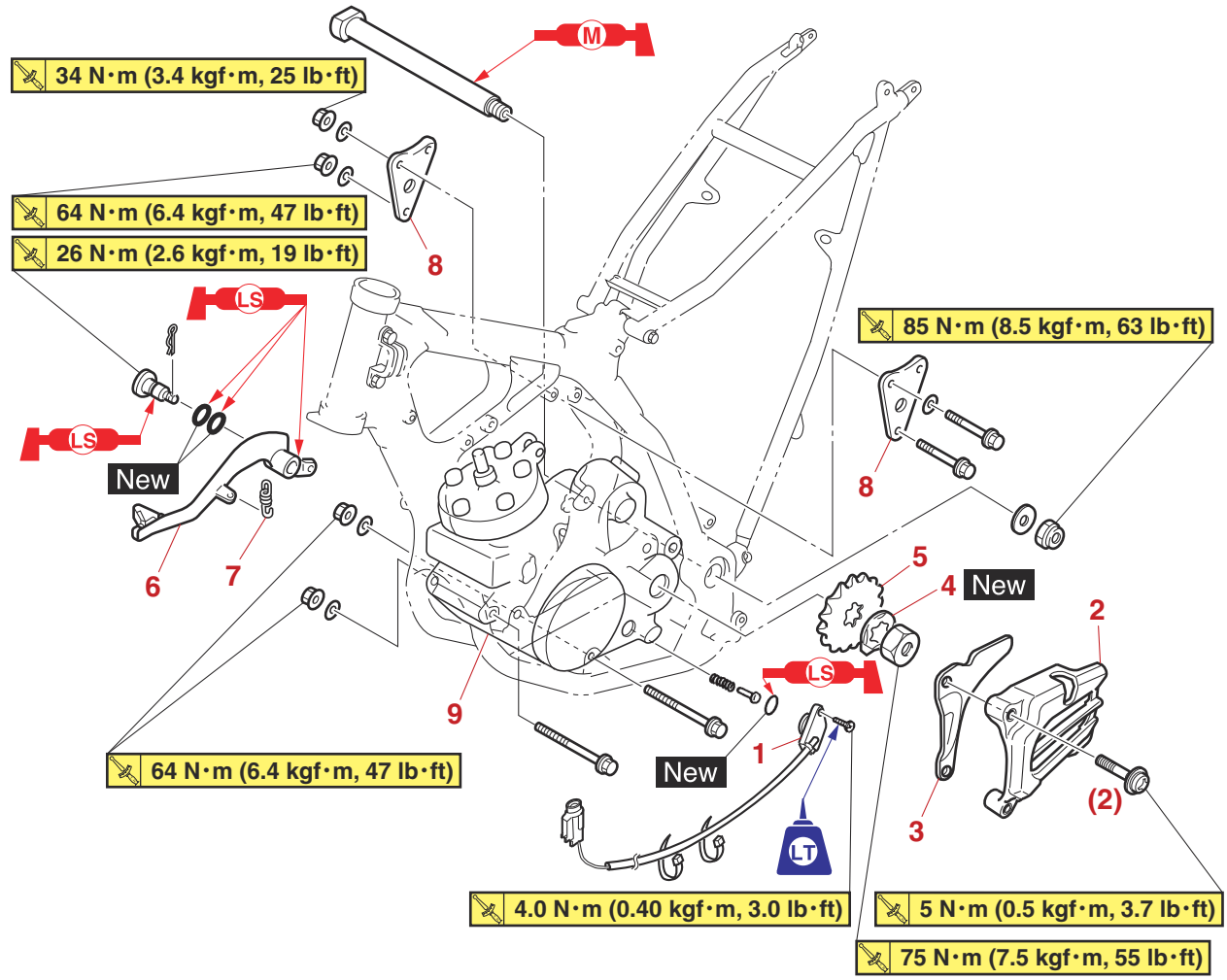

Order	Job/Parts to remove	Q'ty	Remarks
	Transmission oil		Drain. Refer to "CHANGING THE TRANSMISSION OIL" on page 3-7.
	Seat		Refer to "GENERAL CHASSIS" on page 4-1.
	Fuel tank		Refer to "FUEL TANK" on page 7-1.
1	Neutral switch	1	Disconnect the neutral switch lead.
2	Drive chain sprocket cover	1	
3	Drive chain sprocket guide	1	
4	Lock washer	1	
5	Drive sprocket	1	
6	Brake pedal	1	
7	Spring	1	
8	Engine bracket	2	
9	Engine	1	

EAM30161

REMOVING THE ENGINE

TIP

Make sure that the couplers, hoses and cables are disconnected.

1. Lift the engine “1” up to the point where the engine’s mounting front does not contact the bracket on the frame.

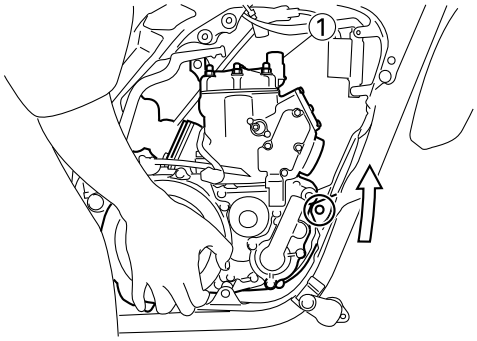

2. Remove the engine “1” aslant and upward while inclining it toward the kick crank side so that the engine’s mounting top does not contact the bracket on the frame.

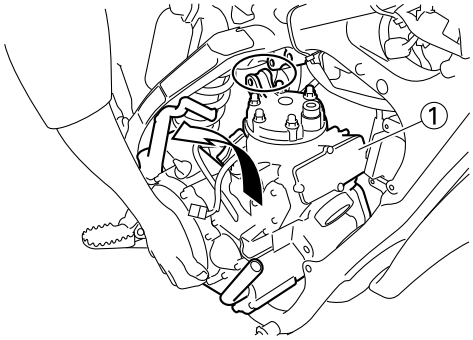

EAM30164

INSTALLING THE ENGINE

1. Install:
   - Engine “1”
     (from the right side)
   - Pivot shaft “2”
   - Pivot shaft nut “3”

	Pivot shaft nut **85 N·m (8.5 kgf·m, 63 lb·ft)**

- Engine mounting bolt (lower side) “4”
- Engine mounting nut (lower side) “5”

	Engine mounting nut (lower side) **64 N·m (6.4 kgf·m, 47 lb·ft)**

- Engine mounting bolt (front side) “6”
- Engine mounting nut (front side) “7”

	Engine mounting nut (front side) **64 N·m (6.4 kgf·m, 47 lb·ft)**

- Engine bracket “8”
- Engine bracket bolt (upper side) “9”
- Engine bracket nut (upper side) “10”

	Engine bracket nut (upper side) **34 N·m (3.4 kgf·m, 25 lb·ft)**

- Engine bracket bolt (lower side) “11”
- Engine bracket nut (lower side) “12”

	Engine bracket nut (lower side) **64 N·m (6.4 kgf·m, 47 lb·ft)**

TIP

Apply the molybdenum disulfide grease on the pivot shaft.

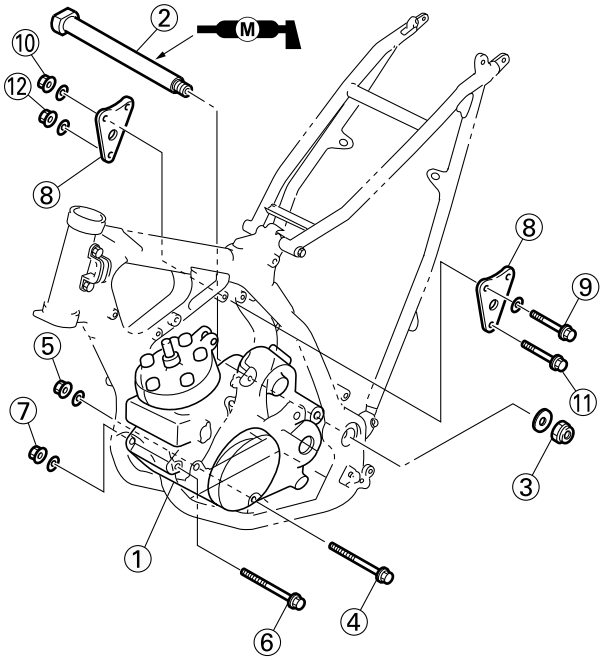

EAM20190

CYLINDER HEAD, CYLINDER AND PISTON

Removing the cylinder head and cylinder

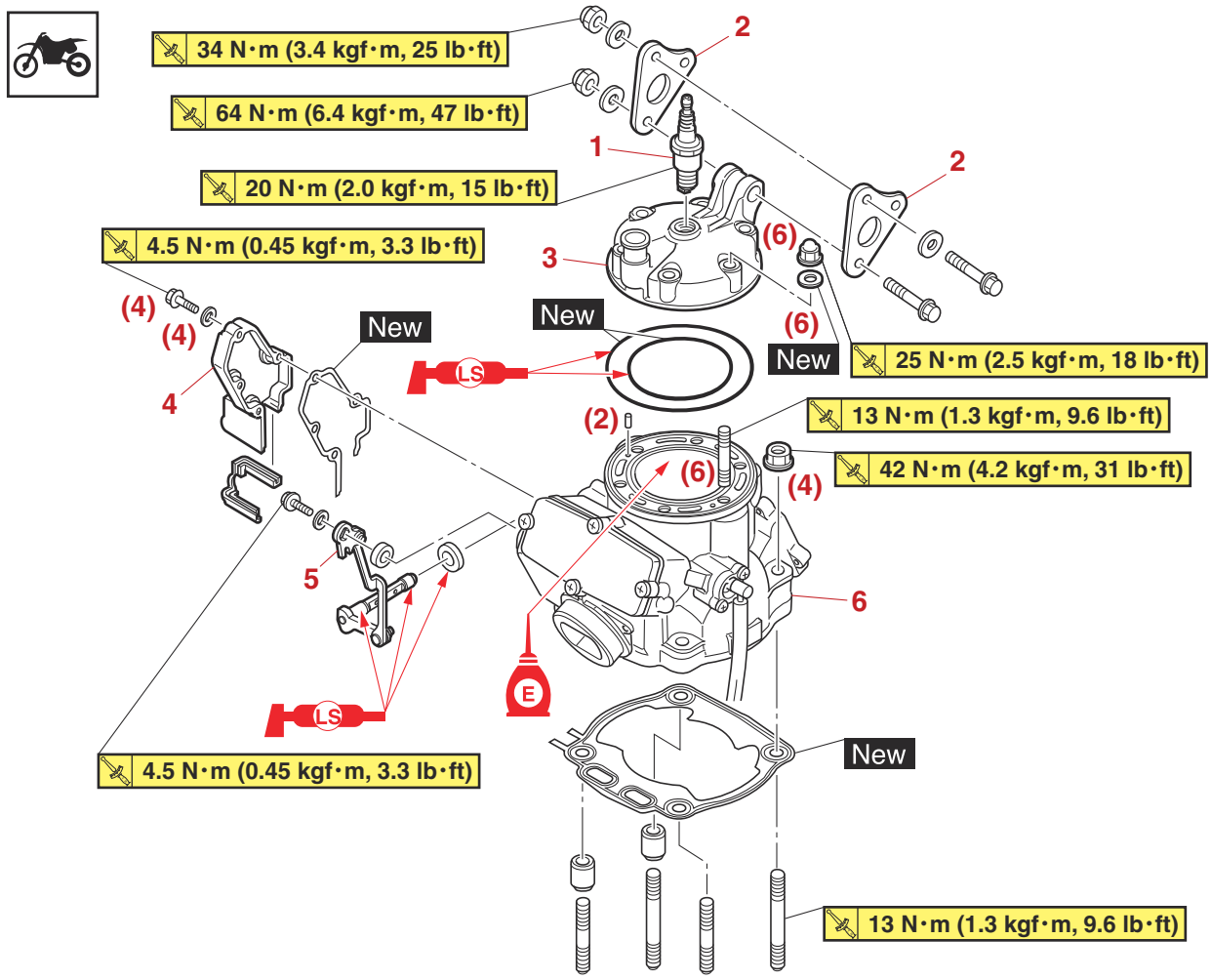

Order	Job/Parts to remove	Q'ty	Remarks
	Seat		Refer to "GENERAL CHASSIS" on page 4-1.
	Fuel tank		Refer to "FUEL TANK" on page 7-1.
	Exhaust pipe/Silencer		Refer to "ENGINE REMOVAL" on page 5-1.
	Radiator hose 1		Disconnect at cylinder head side.
	Carburetor		Refer to "CARBURETOR" on page 7-3.
1	Spark plug	1	
2	Engine bracket	2	
3	Cylinder head	1	
4	Power valve housing	1	
5	Push rod	1	
6	Cylinder	1	

Disassembling the YPVS system

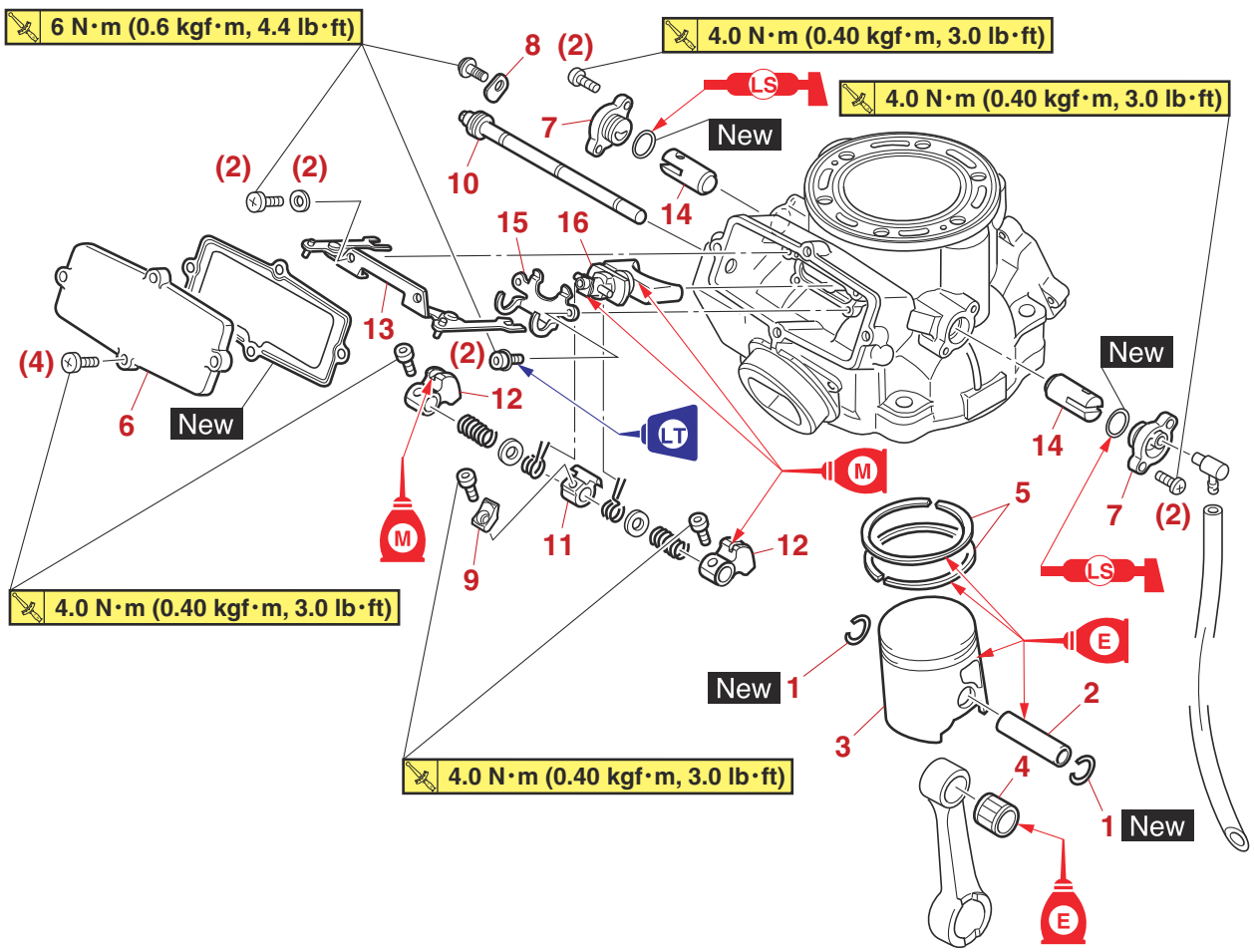

Order	Job/Parts to remove	Q'ty	Remarks
1	Piston pin clip	2	
2	Piston pin	1	
3	Piston	1	
4	Small end bearing	1	
5	Piston ring set	1	
6	Power valve cover	1	
7	Side holder	2	
8	Thrust plate	1	
9	Power valve holder 1	1	
10	Power valve shaft	1	
11	Power valve link lever	1	
12	Pulley	2	
13	Link rod	1	
14	Power valve 2	2	
15	Power valve holder 2	1	
16	Power valve 1	1	

EAM30086

REMOVING THE CYLINDER HEAD

1. Remove:
   - Cylinder head nut

TIP

Loosen each nut 1/2 of a turn at a time. After all of the nuts are fully loosened, remove them.

EAM30543

REMOVING THE PUSH ROD

1. Remove:
   - Push rod bolt “1”
   - Push rod “2”

ECA27140

NOTICE

Be sure to use the set pin. If the set pin is not used, the power valve constituent parts will result in damage.

TIP

- Set the set pin “3” included in owner’s tool kit to remove the push rod bolt.
- Do not forget to remove the set pin.

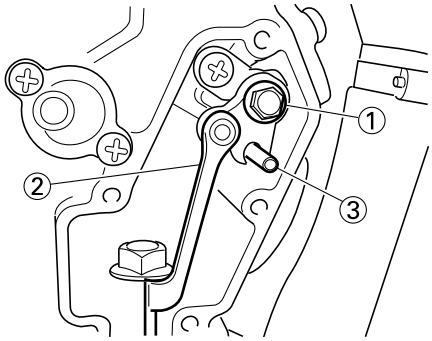

2. Remove:
   - Set pin

EAM30544

REMOVING THE PISTON

1. Remove:
   - Piston pin clip “1”

TIP

Before removing the piston pin clip, cover the crankcase opening with a clean rag to prevent the piston pin clip from falling into the crankcase.

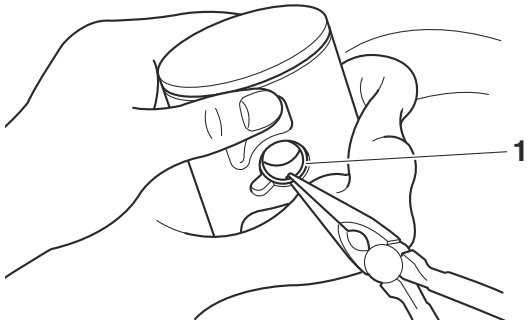

2. Remove:
   - Piston pin “1”
   - Piston “2”
   - Small end bearing

ECA13810

NOTICE

Do not use a hammer to drive the piston pin out.

TIP

Before removing the piston pin, deburr the piston pin clip’s groove and the piston’s pin bore area. If both areas are deburred and the piston pin is still difficult to remove, remove it with the piston pin puller set “3”.

Piston pin puller set
90890-01304
Piston pin puller
YU-01304

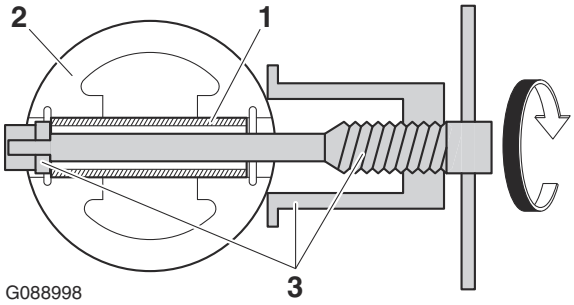

3. Remove:
   - Piston ring

TIP

When removing a piston ring, open the end gap with your fingers and lift the other side of the ring over the piston crown.

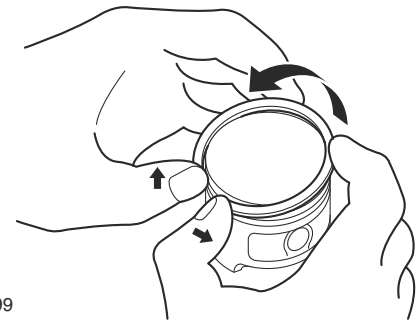

EAM30545

CHECKING THE CYLINDER HEAD

1. Eliminate:
   - Combustion chamber carbon deposits (with a rounded scraper "1")

TIP

Do not use a sharp instrument to avoid damaging or scratching:
- Spark plug bore threads

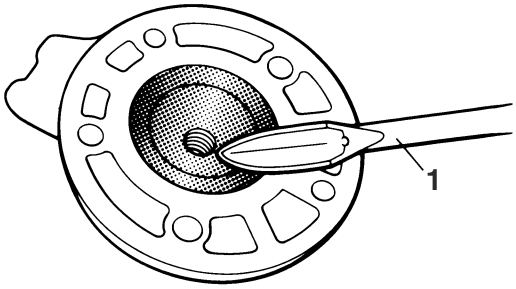

2. Check:
   - Cylinder head
     Damage/scratches → Replace.
   - Cylinder head water jacket
     Mineral deposits/rust → Eliminate.
3. Measure:
   - Cylinder head warpage
     Out of specification → Resurface the cylinder head.

	Warpage limit **0.03 mm (0.0012 in)**

   a. Place a straightedge "1" and a thickness gauge "2" across the cylinder head.

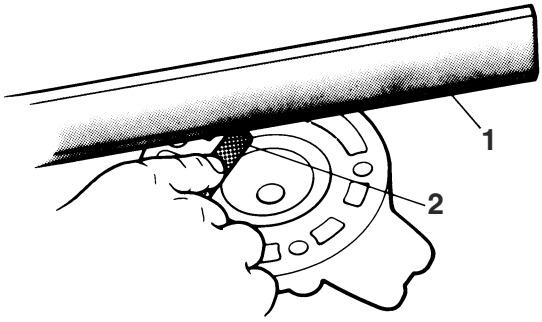

   b. Measure the warpage.
   c. If the limit is exceeded, resurface the cylinder head as follows.
   d. Place a 400–600 grit wet sandpaper on the surface plate and resurface the cylinder head using a figure-eight sanding pattern.

TIP

To ensure an even surface, rotate the cylinder head several times.

EAM30546

CHECKING THE CYLINDER AND PISTON

1. Check:
   - Piston wall
   - Cylinder wall
     Vertical scratches → Replace the cylinder, and replace the piston and piston rings as a set.
2. Measure:
   - Piston-to-cylinder clearance
     a. Measure the cylinder bore "C" with the cylinder bore gauge.

TIP

Measure the cylinder bore "C" by taking side-to-side and front-to-back measurements of the cylinder.

	Bore **66.400–66.414 mm (2.6142–2.6147 in)** **Wear limit** **66.464 mm (2.6167 in)**

"C" = maximum of D_1, D_2, D_3, D_4, D_5, D_6

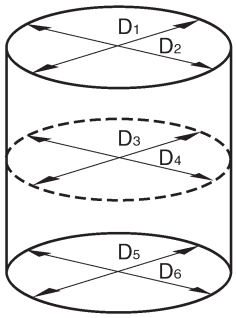

G089000

b. If out of specification, replace the cylinder, and replace the piston and piston rings as a set.
c. Measure the piston skirt diameter with the micrometer.
d. Measure the specific distance "b" from the stepped surface "a" on inside of the piston.

Diameter
66.352–66.367 mm (2.6123–2.6129 in)

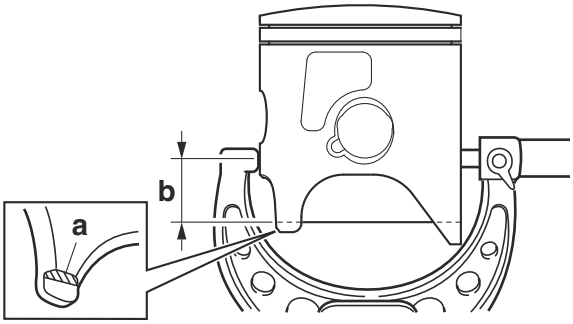

a. 17.5 mm (0.69 in) from the bottom edge of the piston

e. If out of specification, replace the piston and piston rings as a set.
f. Calculate the piston-to-cylinder clearance with the following formula.

Piston-to-cylinder clearance =
Cylinder bore - Piston skirt diameter

Piston-to-cylinder clearance
0.045–0.050 mm (0.0018–0.0020 in)

g. If out of specification, replace the cylinder, and replace the piston and piston rings as a set.

EAM30547

COMBINATION OF PISTON AND CYLINDER

1. Check:
   - Cylinder mark "a"

Cylinder mark "a"	Cylinder size
A	66.400–66.402 mm (2.61417–2.61425 in)
B	66.404–66.406 mm (2.61433–2.61441 in)
C	66.408–66.410 mm (2.61449–2.61457 in)
D	66.412–66.414 mm (2.61465–2.61472 in)

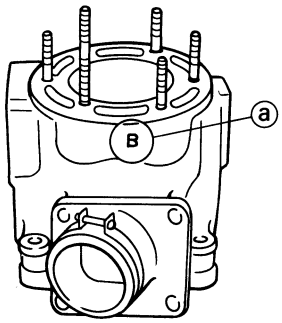

2. Check:
   - Piston mark "a"

Piston mark "a" (color)	Piston size
A (red)	66.352–66.355 mm (2.61228–2.61240 in)
B (orange)	66.356–66.359 mm (2.61244–2.61256 in)
C (green)	66.360–66.363 mm (2.61260–2.61272 in)
D (purple)	66.364–66.367 mm (2.61276–2.61287 in)

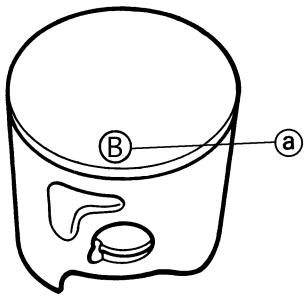

3. Combination:
   - Combine the piston and cylinder by the following chart.

Cylinder mark	Piston mark (color)
A	A (red)
B	B (orange)

Cylinder mark	Piston mark (color)
C	C (green)
D	D (purple)

TIP

When you purchase a cylinder, you cannot designate its size. Choose the piston that matches the above chart.

EAM30548

CHECKING THE PISTON RING

1. Measure:
   - Piston ring side clearance
     Out of specification → Replace the piston and piston ring as a set.

TIP

Before measuring the piston ring side clearance, eliminate any carbon deposits from the piston ring grooves and piston ring.

Top ring
Ring side clearance
0.030–0.065 mm (0.0012–0.0026 in)
Side clearance limit
0.100 mm (0.0039 in)
2nd ring
Ring side clearance
0.030–0.065 mm (0.0012–0.0026 in)
Side clearance limit
0.100 mm (0.0039 in)

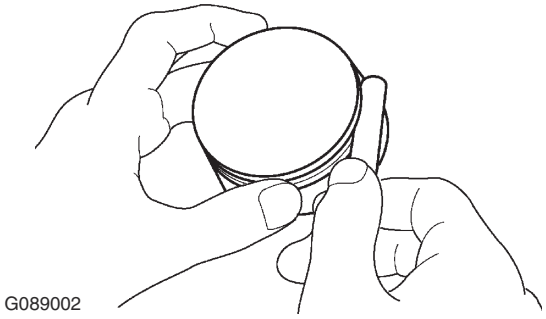
G089002

2. Install:
   - Piston ring
     (into the cylinder)

TIP

Use the piston crown to level the piston ring near bottom of cylinder "a", where cylinder wear is lowest.

3. Measure:
   - Piston ring end gap
     Out of specification → Replace the piston ring.

End gap limit
0.95 mm (0.0374 in)

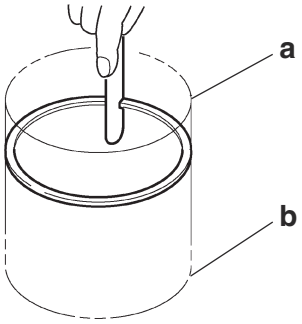

G089003

b. Upper of cylinder

EAM30549

CHECKING THE PISTON PIN

1. Check:
   - Piston pin
     Blue discoloration/grooves → Replace the piston pin, and then check the fuel and engine mixing oil.
2. Measure:
   - Piston pin outside diameter "a"
     Out of specification → Replace the piston pin.

Piston pin outside diameter limit
17.975 mm (0.7077 in)

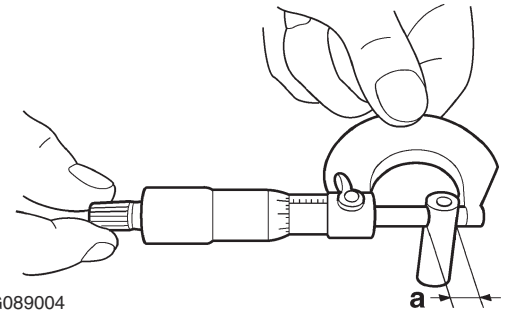

G089004

3. Measure:
   - Piston pin bore inside diameter "b"
     Out of specification → Replace the piston.

Piston pin bore inside diameter limit
18.040 mm (0.7102 in)

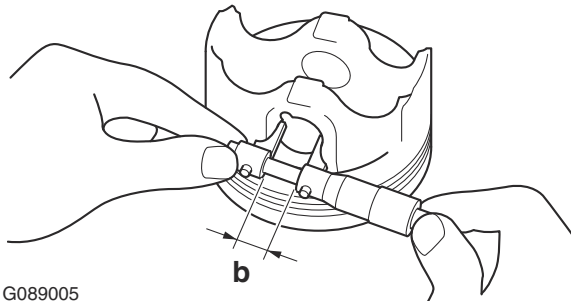

G089005

4. Calculate:
   - Piston-pin-to-piston-pin-bore clearance
     Out of specification → Replace the piston pin and piston as a set.

Piston-pin-to-piston-pin-bore clearance = Piston pin bore inside diameter "b" - Piston pin outside diameter "a"

	Piston-pin-to-piston-pin-bore clearance **0.004–0.020 mm (0.0002–0.0008 in)** **Limit** **0.065 mm (0.0026 in)**

EAM30550

CHECKING THE SMALL END BEARING

1. Check:
   - Small end bearing
     Signs of heat discoloration → Replace.

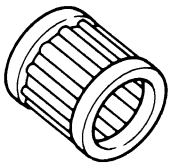

EAM30553

CHECKING THE POWER VALVE

1. Check:
   - Power valve 1, 2 "1"
     Wear/damage → Replace.
     Carbon deposits → Remove.
   - Power valve holder 1 "2"
   - Power valve link lever "3"
   - Pulley "4"
   - Power valve shaft "5"
   - Link rod "6"
   - Washer "7"
     Wear/damage → Replace.
   - Spring 1, 2 "8"
     Broken → Replace.

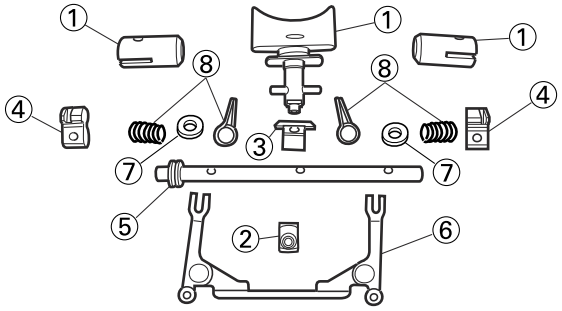

EAM30552

CHECKING THE POWER VALVE HOLE ON CYLINDER

1. Remove:
   - Carbon deposits
     (from the power valve hole surface "a")

TIP

Do not use a sharp instrument. Avoid scratching the aluminum.

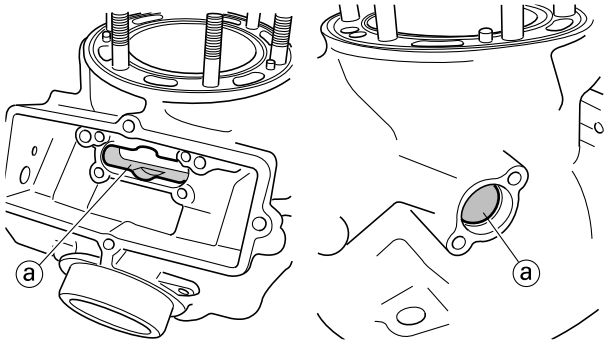

EAM30551

ASSEMBLING THE POWER VALVE

1. Install:
   - Power valve 1 "1"
   - Power valve holder 2 "2"
   - Bolt (power valve holder 2) "3"

	Power valve holder 2 **6 N·m (0.6 kgf·m, 4.4 lb·ft)** **LOCTITE®**

TIP

- Install the power valve 1 with its gouge "a" facing upside.
- Apply the molybdenum disulfide oil on the power valve 1.

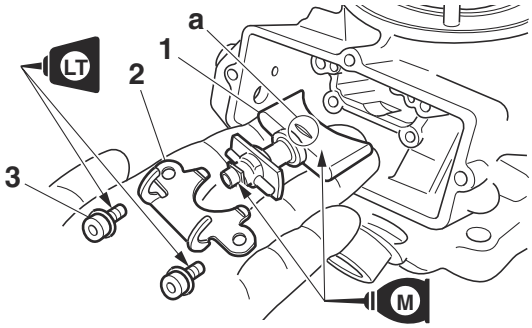

2. Install:
   - Power valve 2 “1”
   - Link rod “2”
   - Washer “3”
   - Link rod screw “4”

	Link rod screw **6 N·m (0.6 kgf·m, 4.4 lb·ft)**

TIP

Install the link rod with the cuts “a” in its arm ends fitting over the pins “b” on the power valves 2.

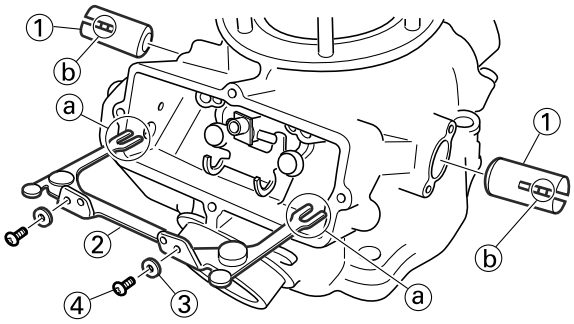

3. Install:
   - Thrust plate “1”
   - Thrust plate screw “2”

	Thrust plate screw **6 N·m (0.6 kgf·m, 4.4 lb·ft)**

TIP

Be sure to install the thrust plate to the cylinder before installing the power valve shaft.

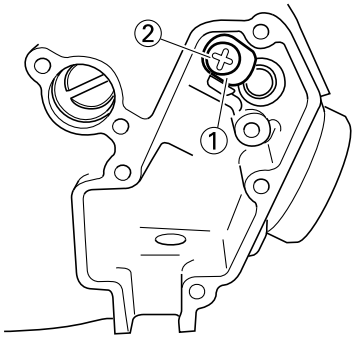

4. Install:
   - Spring 1 “1”
   - Power valve link lever “2”
   - Pulley “3”
   - Spring 2 “4”
   - Washer “5”
   - Power valve shaft “6”

TIP

- Install the spring 1 to the power valve link lever, and then to the cylinder.
- Install the spring 1 with its stopper portion “a” facing inward.
- Apply the molybdenum disulfide oil on the grooves in the pulleys.
- Apply the lithium-soap-based grease on the oil seal lip.
- Install the power valve shaft with its cut “b” aligning with the thrust plate “7”, and then rotate the power valve shaft so that its cut faces upward.

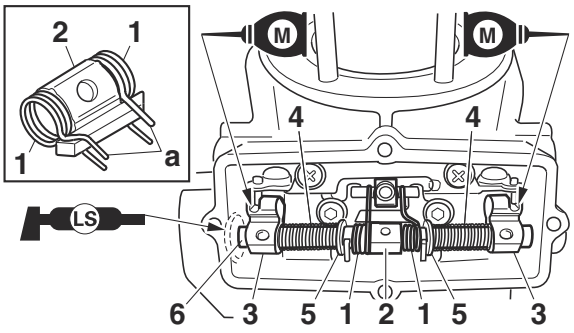

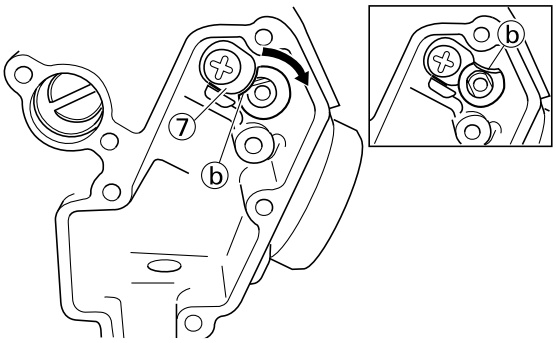

5. Install:
   - Power valve holder 1 “1”
   - Power valve link lever bolt “2”

	Power valve link lever bolt **4.0 N·m (0.40 kgf·m, 3.0 lb·ft)**

   - Pulley bolt “3”

	Pulley bolt **4.0 N·m (0.40 kgf·m, 3.0 lb·ft)**

TIP

First tighten the power valve link lever bolt, and then tighten the pulley bolts.

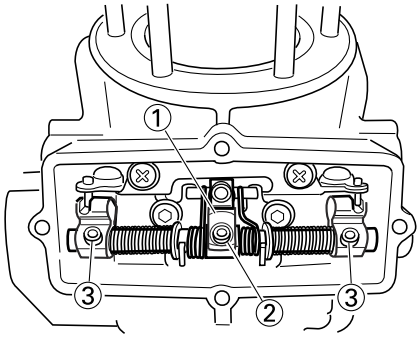

6. Check:
   - Power valve 1 smooth movement
     Unsmooth movement → Repair or replace.

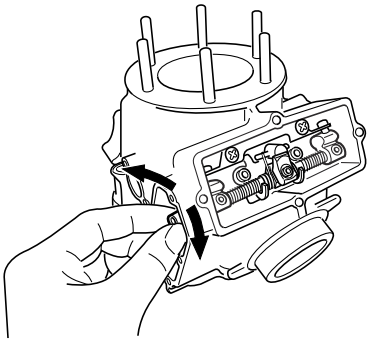

7. Install:
   - O-ring “1” New
   - Side holder “2”
   - Side holder screw “3”

	Side holder screw **4.0 N·m (0.40 kgf·m, 3.0 lb·ft)**

   - YPVS breather hose “4”

TIP

- Apply the lithium-soap-based grease on the O-rings.
- Install the side holder with its projection “a” facing upward.

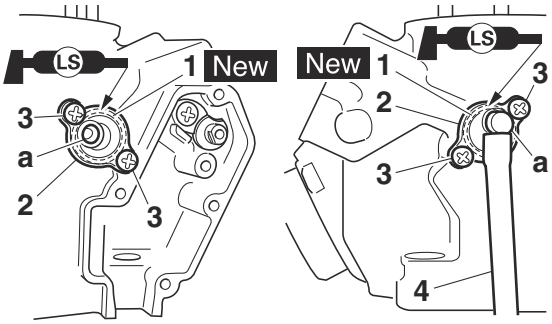

8. Install:
   - Gasket (power valve cover) “1” New
   - Power valve cover “2”
   - Power valve cover screw “3”

	Power valve cover screw **4.0 N·m (0.40 kgf·m, 3.0 lb·ft)**

TIP

- Install the gasket with its cut “a” facing downward and the seal print side toward the power valve cover.
- Install the power valve cover so that the arrow mark “b” faces upward.

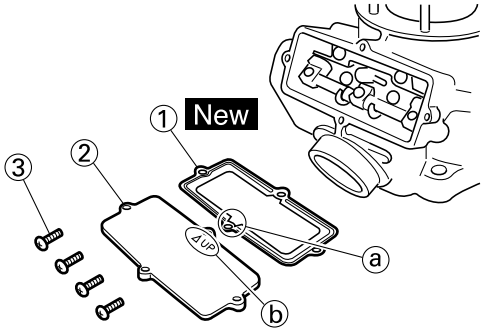

EAM30554

INSTALLING THE PISTON AND CYLINDER

1. Install:
   - Piston ring “1”

TIP

- Take care not to scratch the piston or damage the piston ring.
- Align the piston ring gap with the pin “2”.
- After installing the piston ring, check the smooth movement of it.

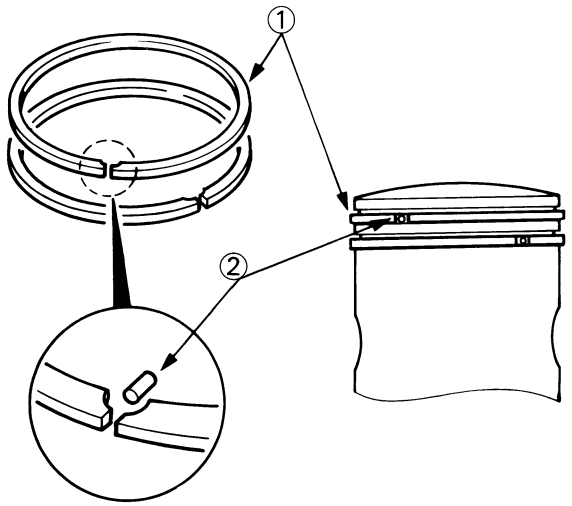

2. Install:
   - Cylinder gasket “1” New
   - Small end bearing “2”
     (with the recommended lubricant)
   - Dowel pin “3”

	Recommended lubricant **Engine oil**

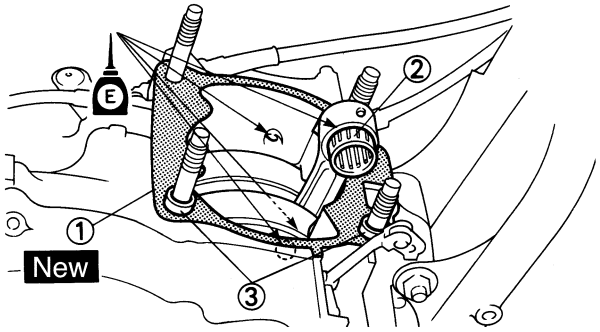

3. Install:
   - Piston “1”
   - Piston pin “2”
   - Piston pin clip “3” New

TIP
- Apply engine oil the piston pin.
- Make sure the arrow mark “a” on the piston points towards the exhaust side of the cylinder.
- Before installing the piston pin clip, cover the crankcase opening with a clean rag to prevent the clip from falling into the crankcase.
- Do not allow the clip open ends to meet the piston pin slit “b”.

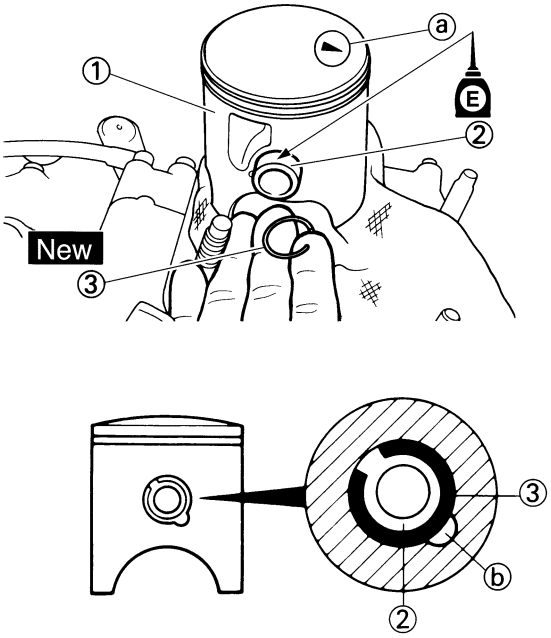

4. Lubricate:
   - Piston
   - Piston ring
   - Cylinder
     (with the recommended lubricant)

	Recommended lubricant **Engine oil**

5. Install:
   - Cylinder “1”
   - Cylinder nut “2”

	Cylinder nut **42 N·m (4.2 kgf·m, 31 lb·ft)**

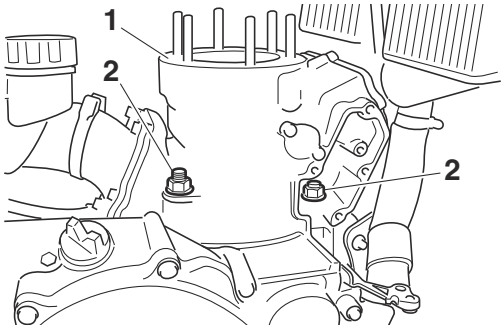

TIP
- While compressing the piston ring with one hand, install the cylinder with the other hand.
- Tighten the nuts in stage, using a crisscross pattern.

6. Install:
   - Push rod “1”
   - Push rod bolt “2”

	Push rod bolt **4.5 N·m (0.45 kgf·m, 3.3 lb·ft)**

ECA27140

NOTICE

Be sure to use the set pin. If the set pin is not used, the power valve constituent parts will result in damage.

TIP

- Insert the set pin “3” included in owner’s tool kit to install the push rod bolt.
- Do not forget to remove the set pin.

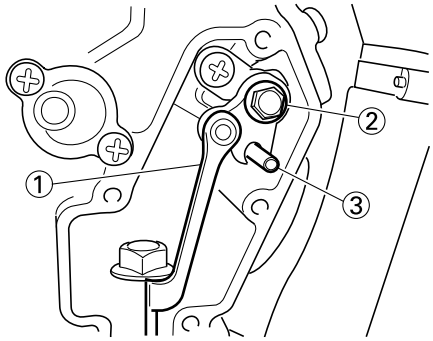

7. Remove:
   - Set pin
8. Install:
   - Gasket (power valve housing) New
   - Power valve housing “1”
   - Power valve housing bolt “2”

	Power valve housing bolt **4.5 N·m (0.45 kgf·m, 3.3 lb·ft)**

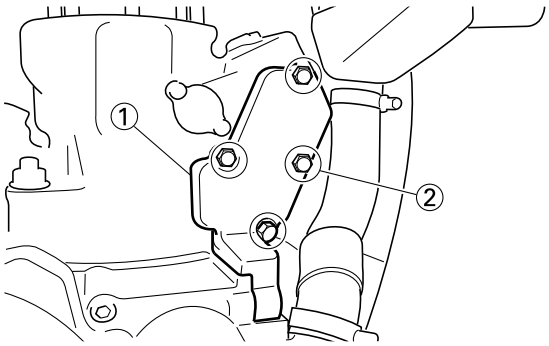

EAM30555

INSTALLING THE CYLINDER HEAD

1. Lubricate:
   - O-ring

	Recommended lubricant **Lithium-soap-based grease**

2. Install:
   - O-ring “1” New
   - Dowel pin “2”

TIP

Apply the lithium-soap-based grease on the O-rings.

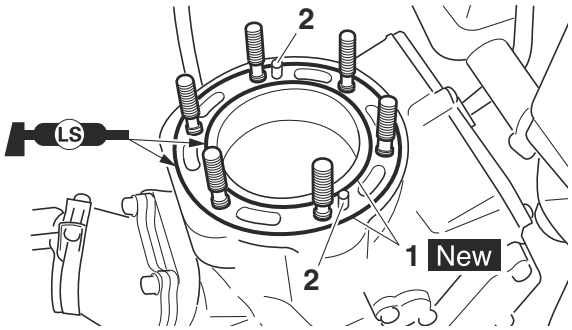

3. Install:
   - Cylinder head “1”
   - Copper washer “2” New
   - Cylinder head nut “3”

	Cylinder head nut **25 N·m (2.5 kgf·m, 18 lb·ft)**

TIP

Tighten the cylinder head nut in stage, using a crisscross pattern.

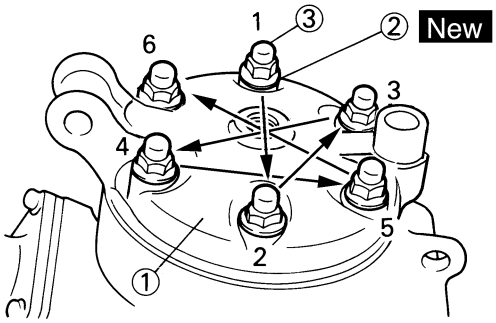

4. Install:
   - Spark plug
   - Spark plug cap
   - Radiator hose

	Spark plug **20 N·m (2.0 kgf·m, 15 lb·ft)**

EAM20191

CDI MAGNETO

Removing the CDI magneto

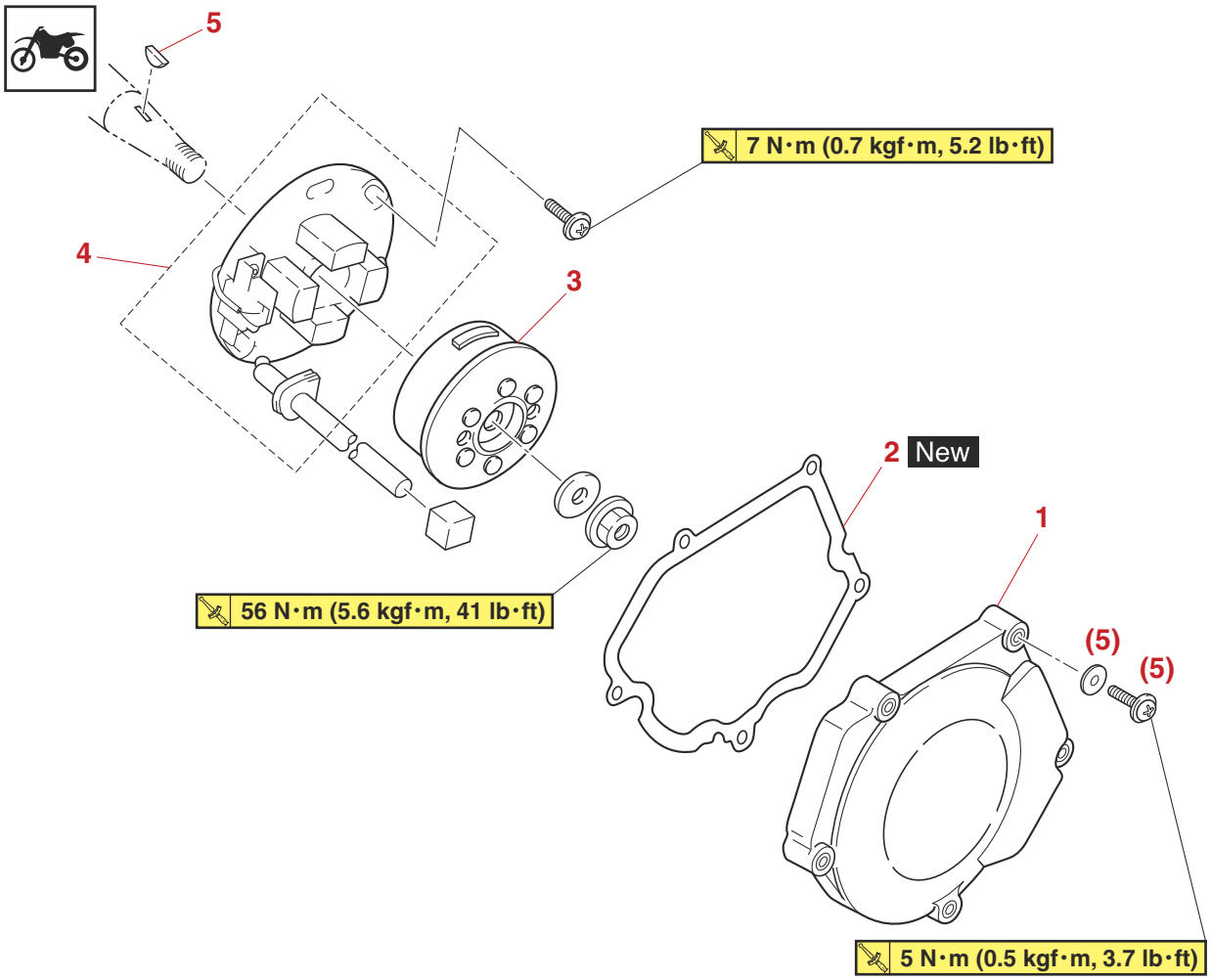

Order	Job/Parts to remove	Q'ty	Remarks
	Seat		Refer to "GENERAL CHASSIS" on page 4-1.
	Fuel tank		Refer to "FUEL TANK" on page 7-1.
	Radiator bolt		Refer to "RADIATOR" on page 6-3.
	CDI magneto lead		Disconnect.
1	Crankcase cover (left)	1	
2	Gasket	1	
3	CDI magneto rotor	1	
4	Stator	1	
5	Woodruff key	1	

EAM30562

REMOVING THE ROTOR

1. Remove:
   - Rotor nut “1”
   - Washer “2”

TIP

While holding the rotor with the rotor holding tool “3”, loosen the rotor nut.

	Rotor holding tool (including handle and 3 pins) **90890-04195**

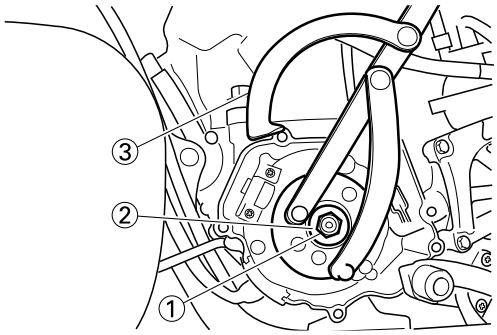

2. Remove:
   - Rotor “1”
     (with the flywheel puller “2”)
   - Woodruff key

	Flywheel puller **90890-01189** **Flywheel puller** **YM-01189**

TIP

When installing the flywheel puller, turn it counterclockwise.

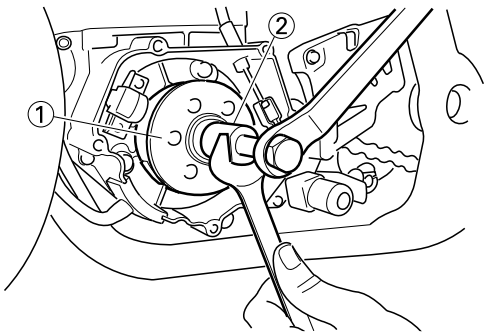

EAM30563

CHECKING THE CDI MAGNETO

1. Check:
   - Rotor inner surface “a”
   - Stator outer surface “b”
     Damage → Inspect the crankshaft runout and crankshaft bearing.
     If necessary, replace CDI magneto and/or stator.

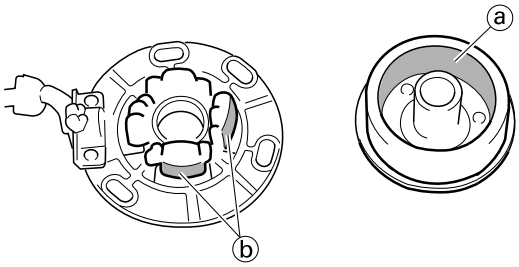

EAM30564

CHECKING THE WOODRUFF KEY

1. Check:
   - Woodruff key “1”
     Damage → Replace.

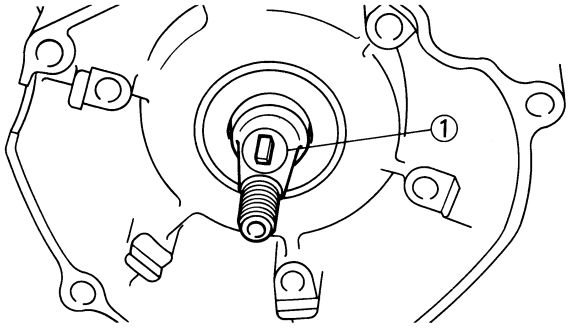

EAM30565

INSTALLING THE CDI MAGNETO

1. Install:
   - Stator “1”
   - Stator coil screw “2”

TIP

Temporarily tighten the screw at this point.

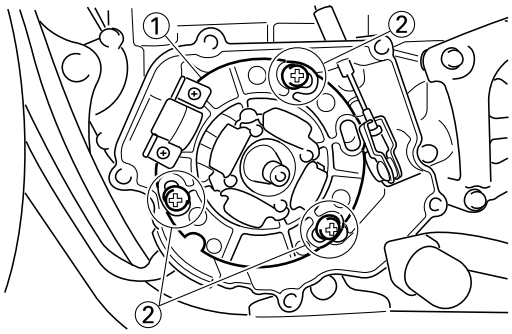

2. Install:
   - Woodruff key “1”
   - Rotor “2”

TIP

- Clean the tapered portions of the crankshaft and rotor.
- When installing the woodruff key, make sure that its flat surface “a” is in parallel with the

crankshaft center line “b”.
- When installing the rotor, align the keyway “c” of the rotor with the woodruff key.

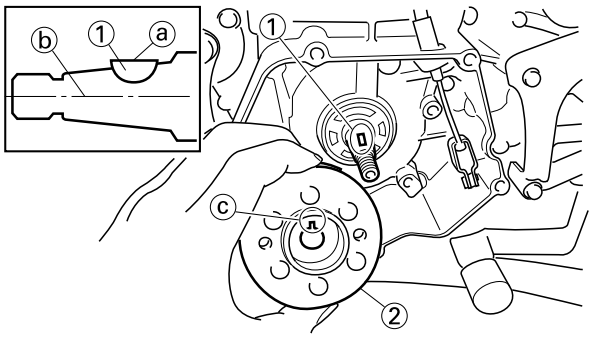

3. Install:
   - Washer “1”
   - Rotor nut “2”
     (with the rotor holding tool “3”)

	CDI magneto rotor nut **56 N·m (5.6 kgf·m, 41 lb·ft)**
	Rotor holding tool (including handle and 3 pins) **90890-04195**

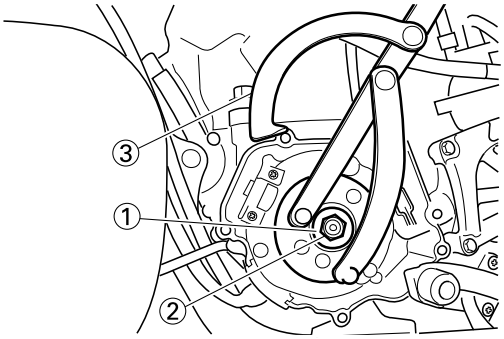

4. Adjust:
   - Ignition timing
     Refer to “CHECKING THE IGNITION TIMING” on page 3-26.
5. Tighten:
   - Stator coil screw “1”

	Stator coil screw **7 N·m (0.7 kgf·m, 5.2 lb·ft)**

TIP
- Mark “a” on the stator “2” should be aligned with the ignition timing position mark “b” on the crankcase “3”.
- Align the stator coil screw “1” with the center of the hole “c”.

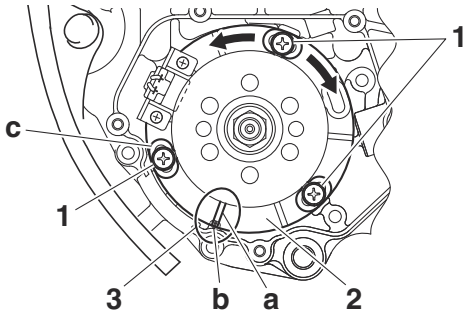

6. Check:
   - Ignition timing
     Re-check the ignition timing.
7. Connect:
   - CDI magneto lead “1”
     Refer to “CABLE ROUTING DIAGRAM” on page 2-15.

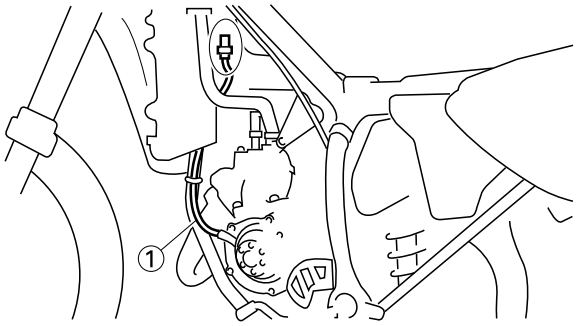

8. Install:
   - Crankcase cover gasket (left) New
   - Crankcase cover (left) “1”
   - Crankcase cover screw (left) “2”

	Crankcase cover screw (left) **5 N·m (0.5 kgf·m, 3.7 lb·ft)**

TIP
Tighten the screws in stage, using a crisscross pattern.

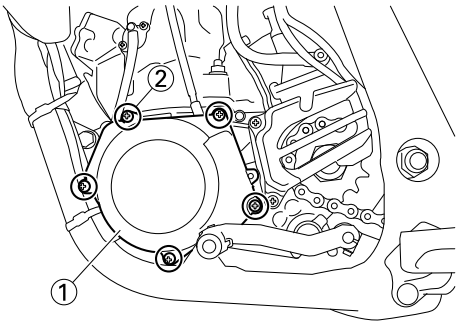

EAM20112

KICKSTARTER

Removing the primary drive gear and kickstarter shaft

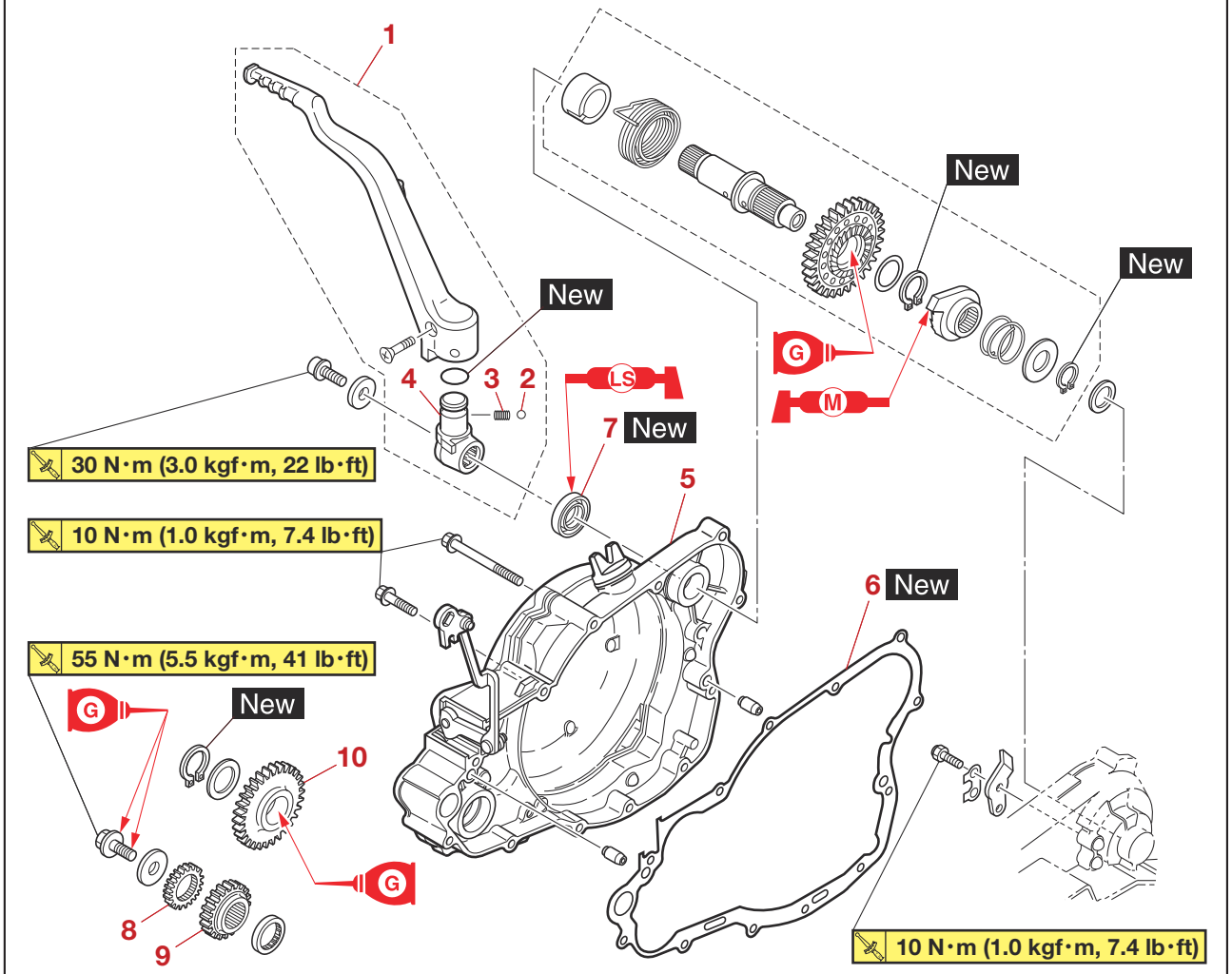

Order	Job/Parts to remove	Q'ty	Remarks
	Transmission oil		Drain. Refer to "CHANGING THE TRANSMISSION OIL" on page 3-7.
	Radiator hose 4		Disconnect at water pump side.
1	Kickstarter lever	1	
2	Ball	1	
3	Spring	1	
4	Kick crank boss	1	
5	Crankcase cover (right)	1	
6	Gasket	1	
7	Oil seal	1	
8	Governor drive gear	1	
9	Primary drive gear	1	
10	Kick idle gear	1	

Removing the primary drive gear and kickstarter shaft

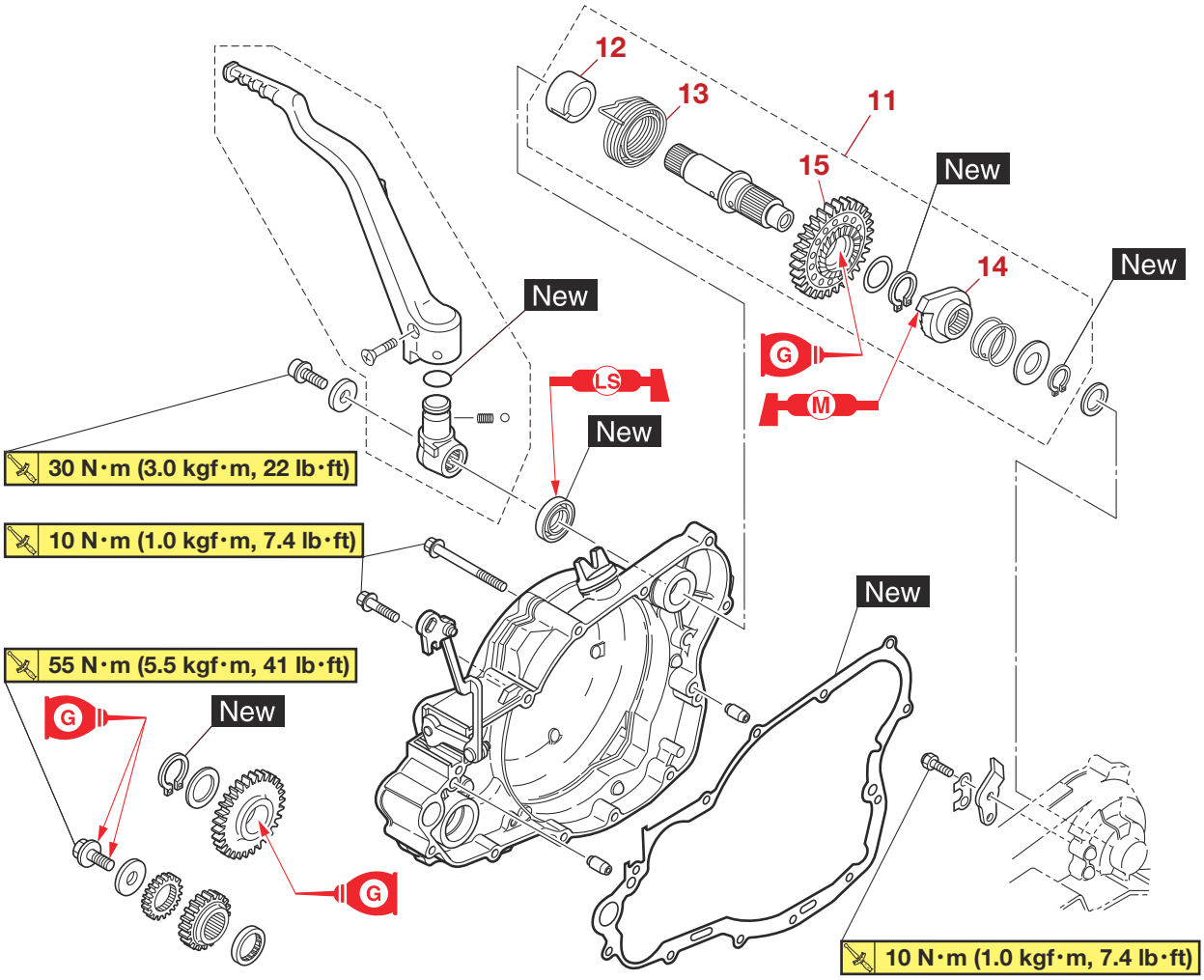

Order	Job/Parts to remove	Q'ty	Remarks
11	Kick shaft assembly	1	
12	Spring guide	1	
13	Torsion spring	1	
14	Ratchet wheel	1	
15	Kick gear	1	

EAM30570

REMOVING THE PRIMARY DRIVE GEAR

1. Loosen:
   - Primary drive gear bolt “1”

TIP

Place an aluminum plate “a” between the teeth of the primary drive gear “2” and driven gear “3”.

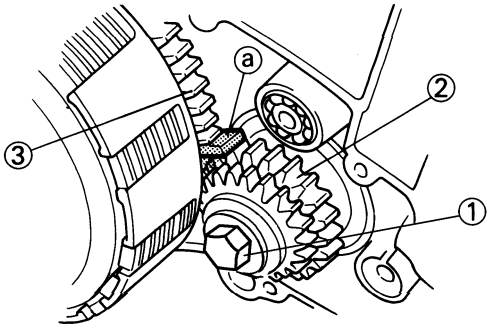

EAM30101

REMOVING THE KICK SHAFT ASSEMBLY

1. Remove:
   - Kick shaft assembly “1”

TIP

Unhook the torsion spring “2” from the hole “a” in the crankcase.

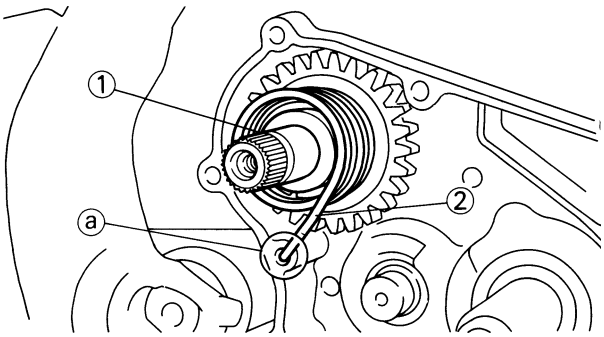

EAM30102

CHECKING THE KICK SHAFT AND RATCHET WHEEL

1. Check:
   - Ratchet wheel “1” smooth movement
     Unsmooth movement → Replace.
   - Kick shaft “2”
     Wear/damage → Replace the kick shaft assembly.
   - Spring “3”
     Broken → Replace.

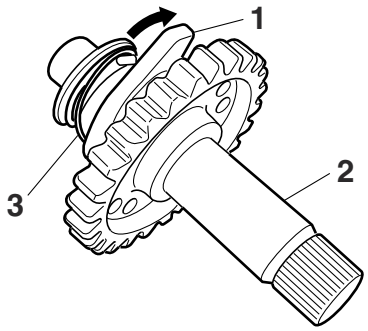

EAM30103

CHECKING THE KICK GEAR, KICK IDLE GEAR AND RATCHET WHEEL

1. Check:
   - Kick gear “1”
     Wear/damage → Replace the kick shaft assembly.
   - Kick idle gear “2”
   - Ratchet wheel “3”
   - Gear teeth “a”
   - Ratchet teeth “b”
     Wear/damage → Replace.

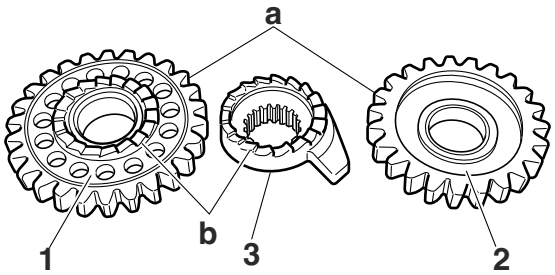

EAM30104

INSTALLING THE KICK SHAFT ASSEMBLY

1. Install:
   - Kick gear “1”
   - Washer “2”
   - Circlip “3” New
   - Ratchet wheel “4”
   - Spring “5”
   - Washer “6”
   - Circlip “7” New
     (to the kick shaft “8”)

TIP

- Apply molybdenum disulfide grease to the inner circumferences of the ratchet wheel.
- Apply the transmission oil on the kick gear inner circumference.
- Align the punch mark “a” on the ratchet wheel with the punch mark “b” on the kick shaft.

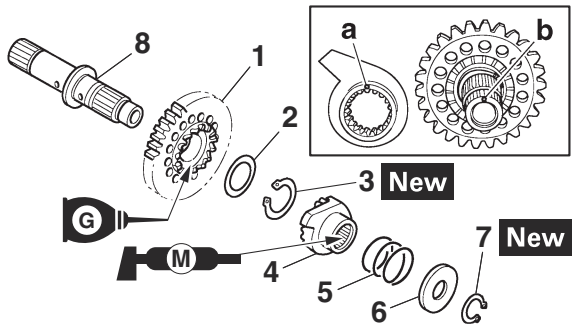

2. Install:
   - Torsion spring “1”
     (to the kick shaft “2”)

TIP

Make sure the stopper “a” of the torsion spring fits into the hole “b” on the kick shaft.

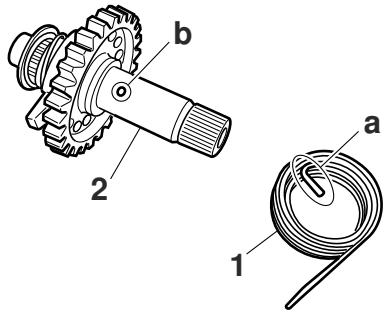

3. Install:
   - Spring guide “1”

TIP

Slide the spring guide into the kick shaft, make sure the groove “a” in the spring guide fits on the stopper of the torsion spring.

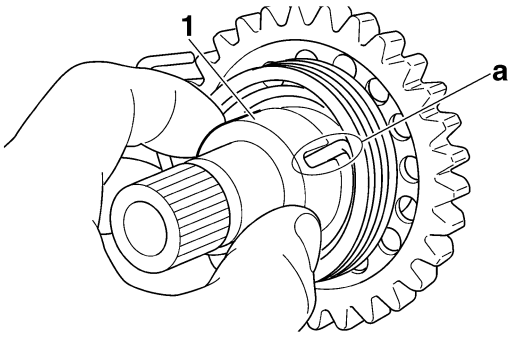

4. Install:
   - Kick shaft assembly “1”

TIP

- Before installation, apply molybdenum disulfide grease to the contacting surfaces of the kick shaft ratchet wheel guide “2” and the kick shaft stopper “a”.
- Apply the transmission oil on the kick shaft.
- Slide the kick shaft assembly into the crankcase and make sure the kick shaft stopper “a” fits into the kick shaft ratchet wheel guide.

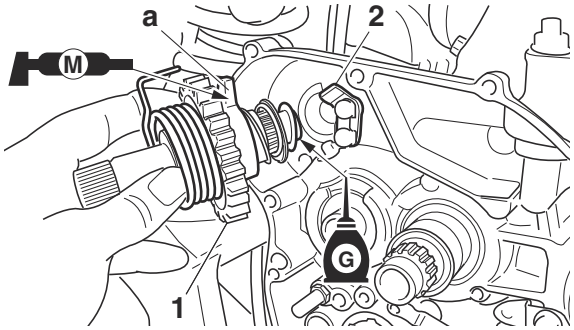

5. Install:
   - Torsion spring “1”

TIP

Turn the torsion spring clockwise and hook into the proper hole “a” in the crankcase.

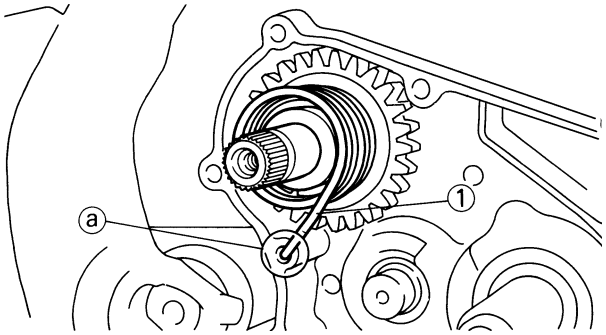

EAM30105

INSTALLING THE KICK IDLE GEAR

1. Install:
   - Kick idle gear “1”
   - Washer “2”
   - Circlip “3” New

TIP

- Apply the transmission oil on the kick idle gear inner circumference.
- Install the kick idle gear with its depressed side “a” toward you.

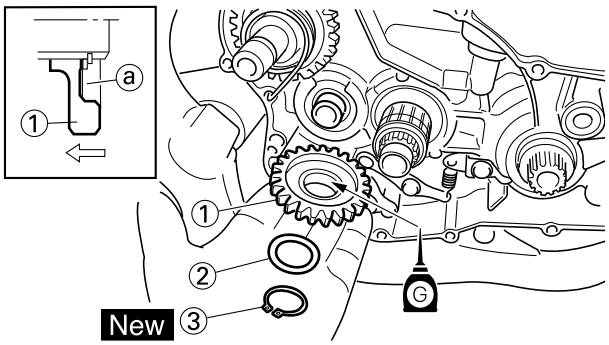

EAM30571

INSTALLING THE PRIMARY DRIVE GEAR

1. Install:
   - Thrust plate “1”
   - Primary drive gear “2”
   - Governor drive gear “3”
   - Washer “4”
   - Primary drive gear bolt “5”

TIP

- Install the plain washer with its chamfered side “a” toward you.
- Apply the transmission oil on the bolt.
- Temporarily tighten the bolt at this point.

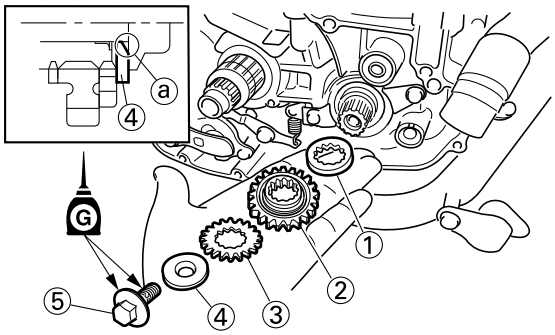

2. Install:
   - Primary driven gear
     Refer to “CLUTCH” on page 5-26.
3. Tighten:
   - Primary drive gear bolt “1”

	Primary drive gear bolt **55 N·m (5.5 kgf·m, 41 lb·ft)**

TIP

Place an aluminum plate “a” between the teeth of the primary drive gear “2” and driven gear “3”.

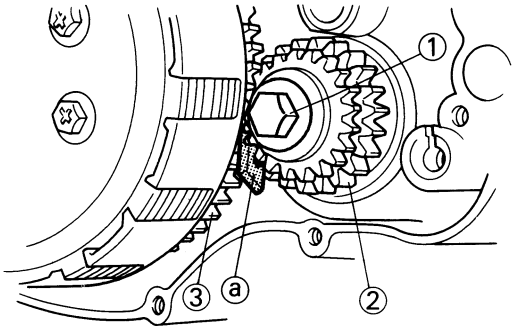

EAM30572

INSTALLING THE KICKSTARTER LEVER

1. Install:
   - Kickstarter lever “1”
   - Washer “2”
   - Kickstarter lever bolt “3”

	Kickstarter lever **30 N·m (3.0 kgf·m, 22 lb·ft)**

TIP

Install the kickstarter closest to but not contacting the clutch cover mounting boss “a”.

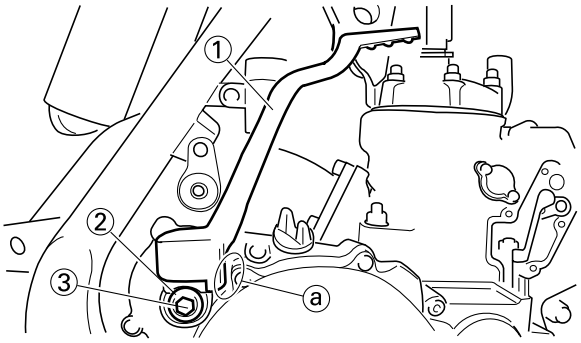

EAM20192

YPVS GOVERNOR

Removing the YPVS governor

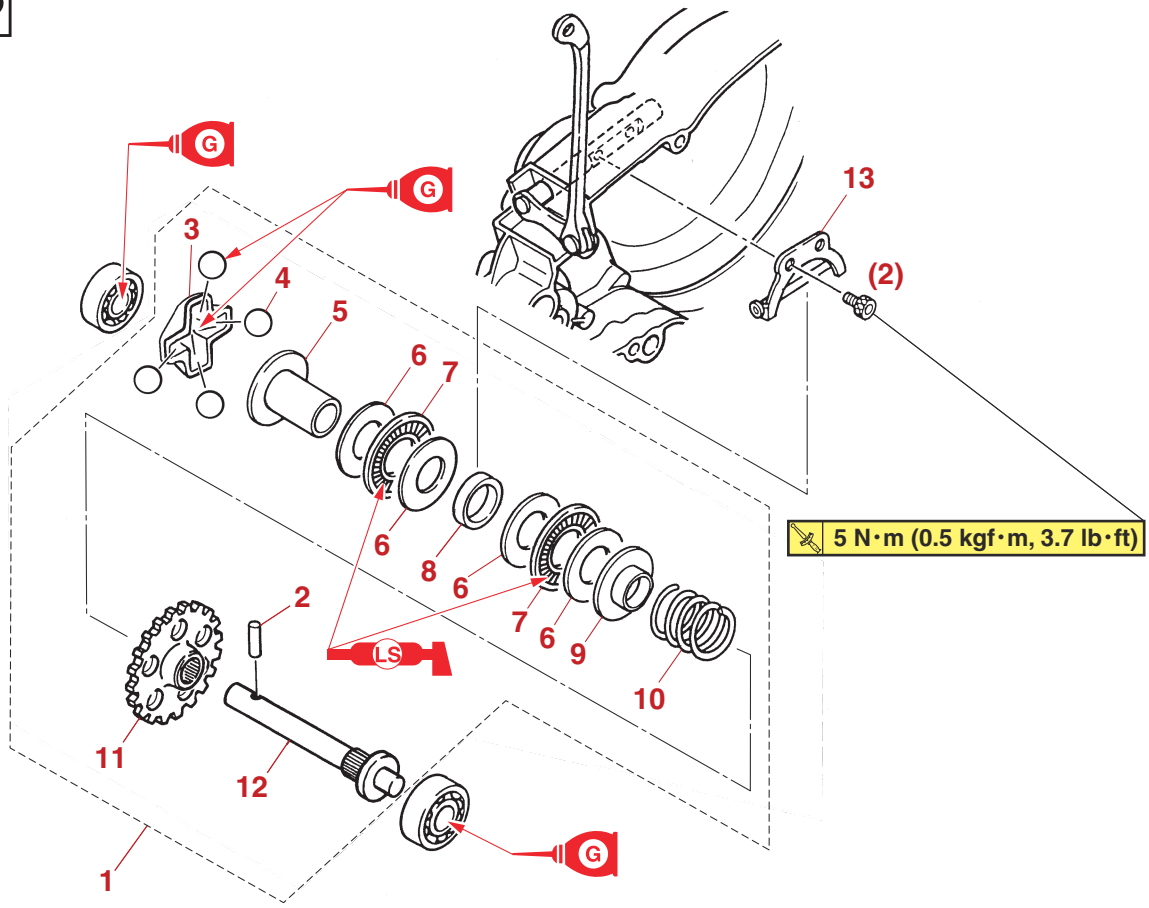

Order	Job/Parts to remove	Q'ty	Remarks
	Crankcase cover (right)		Refer to "KICKSTARTER" on page 5-18.
1	Governor assembly	1	
2	Dowel pin	1	
3	Retainer	1	
4	Ball	4	
5	Retainer weight	1	
6	Washer	4	
7	Bearing	2	
8	Collar	1	
9	Plate	1	
10	Compression spring	1	
11	Governor gear	1	
12	Governor shaft	1	
13	Governor fork	1	

EAM30566

REMOVING THE GOVERNOR

1. Remove:
   - Dowel pin “1”

TIP

While compressing the spring, remove the dowel pin.

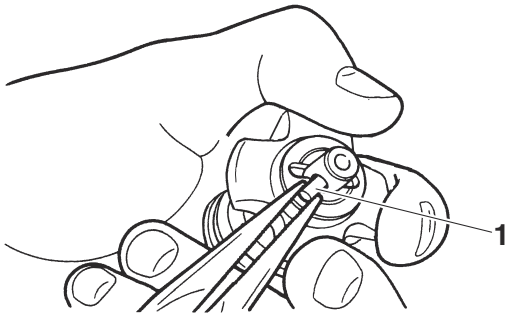

EAM30567

CHECKING THE GOVERNOR GROOVE

1. Check:
   - Washer “1”
   - Collar “2”
     Wear/damage → Replace.

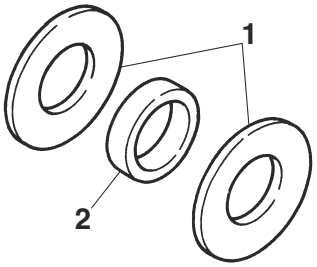

EAM30568

CHECKING THE BEARING

1. Check:
   - Thrust bearing “1”
   - Washer “2”
     Wear/damage → Replace.

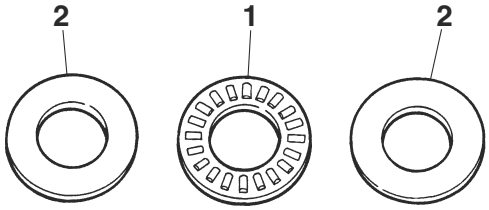

EAM30569

INSTALLING THE GOVERNOR

1. Install:
   - Governor gear “1”
   - Compression spring “2”
   - Plate “3”
   - Washer “4”
   - Thrust bearing “5”
   - Collar “6”
   - Retainer weight “7”
     (to the governor shaft “8”)

TIP

Apply the lithium-soap-based grease on the thrust bearing.

	Recommended lubricant **Lithium-soap-based grease**

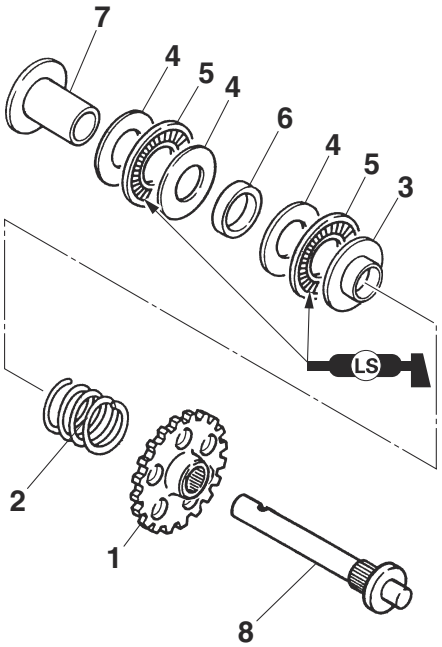

2. Install:
   - Ball “1”
   - Retainer “2”
     (to the governor shaft “3”)

TIP

Apply the transmission oil on the retainer and ball.

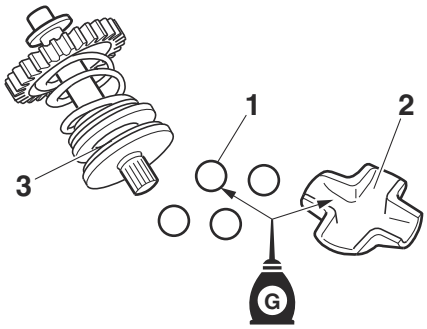

3. Install:
   - Dowel pin “1”

TIP

- While compressing the spring, install the dowel pin.
- Make sure the dowel pin fits into the groove “a” in the retainer.

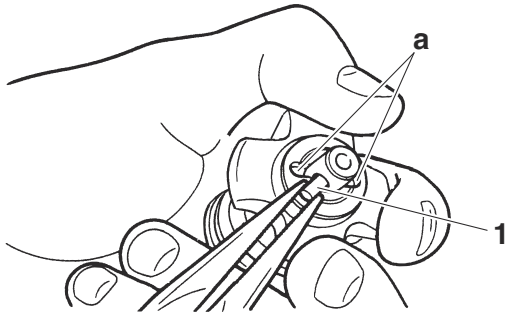

4. Install:
   - Governor assembly “1”

TIP

Align the groove “a” in the governor with the fork “b” and set the governor in the crankcase cover.

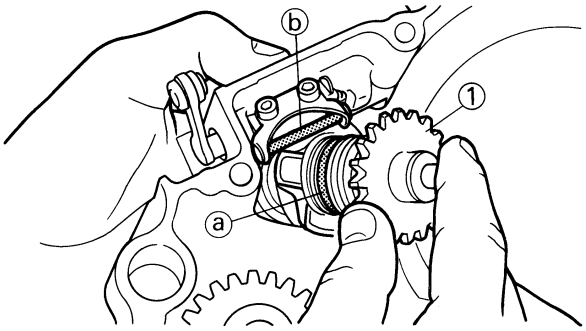

EAM20111

CLUTCH

Removing the clutch

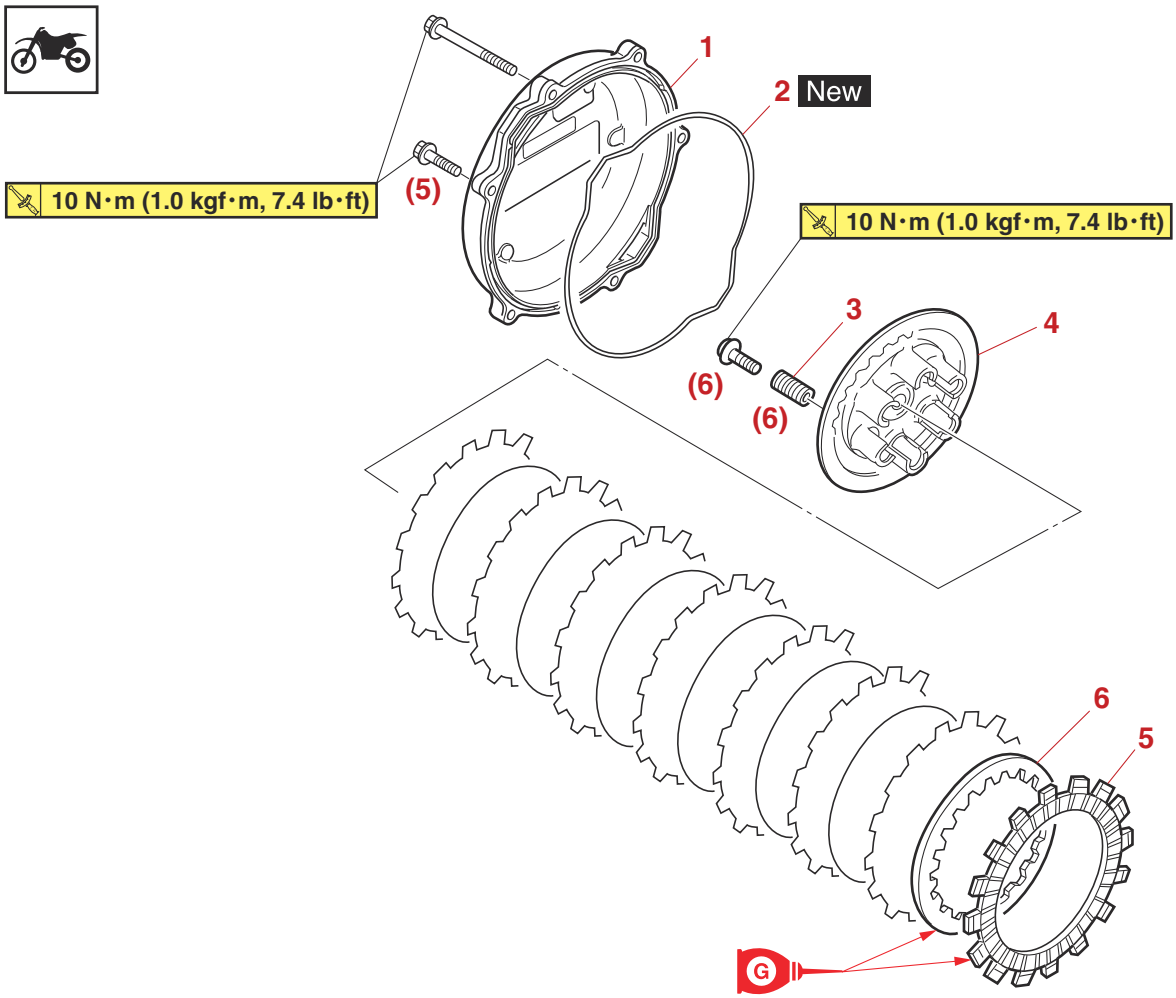

Order	Job/Parts to remove	Q'ty	Remarks
	Transmission oil		Drain. Refer to "CHANGING THE TRANSMISSION OIL" on page 3-7.
	Bolt (brake pedal)		Shift the brake pedal downward.
	Rotor/Stator		Refer to "CDI MAGNETO" on page 5-15.
	Clutch cable		Disconnect at engine side.
1	Clutch cover	1	
2	Gasket	1	
3	Clutch spring	6	
4	Pressure plate	1	
5	Friction plate	8	
6	Clutch plate	7	

Removing the clutch boss

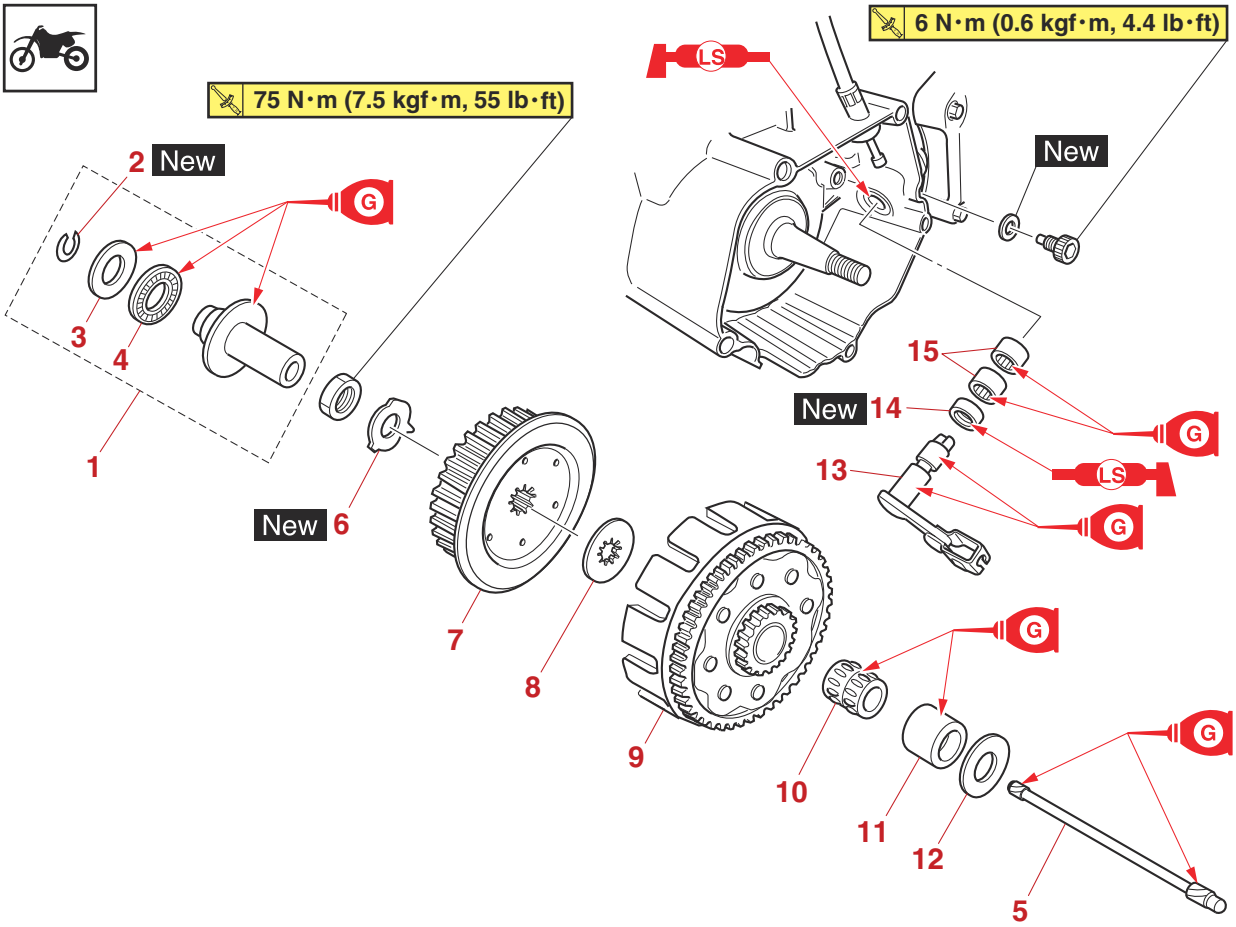

Order	Job/Parts to remove	Q'ty	Remarks
1	Push rod 1	1	
2	Circlip	1	
3	Washer	1	
4	Bearing	1	
5	Push rod 2	1	
6	Lock washer	1	
7	Clutch boss	1	
8	Thrust washer	1	[D = ø44 mm (1.73 in)]
9	Primary driven gear	1	
10	Bearing	1	
11	Spacer 1	1	
12	Thrust washer	1	[D = ø42 mm (1.65 in)]
13	Push lever shaft	1	
14	Oil seal	1	
15	Bearing	2	

EAM30108

REMOVING THE CLUTCH

1. Remove:
   - Clutch boss nut “1”
   - Lock washer
   - Clutch boss “2”

TIP

- While holding the clutch boss with the clutch holder “3”, loosen the clutch boss nut.
- Do not use an impact wrench for removing the clutch boss nut.

Clutch holder
90890-04199
Universal clutch holder
YM-91042

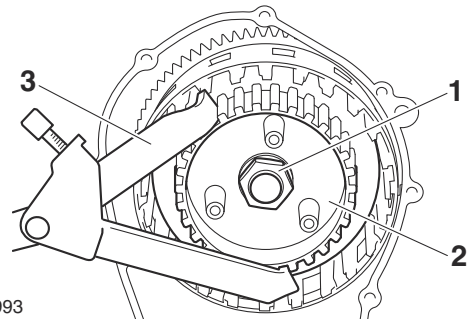

G088993

EAM30109

CHECKING THE FRICTION PLATES

1. Check:
   - Friction plate
     Damage/wear → Replace the friction plates as a set.
2. Measure:
   - Friction plate thickness
     Out of specification → Replace the friction plates as a set.

TIP

Measure it at four points on the friction plate.

Friction plate thickness
2.90–3.10 mm (0.114–0.122 in)
Wear limit
2.80 mm (0.110 in)

EAM30110

CHECKING THE CLUTCH PLATES

1. Check:
   - Clutch plate
     Damage → Replace the clutch plates as a set.
2. Measure:
   - Clutch plate warpage
     (with a surface plate and thickness gauge)
     Out of specification → Replace the clutch plates as a set.

Thickness gauge
90890-03268
Feeler gauge set
YU-26900-9

Clutch plate thickness
1.50–1.70 mm (0.059–0.067 in)
Warpage limit
0.20 mm (0.008 in)

EAM30111

CHECKING THE CLUTCH SPRINGS

1. Check:
   - Clutch spring
     Damage → Replace the clutch springs as a set.
2. Measure:
   - Clutch spring free length
     Out of specification → Replace the clutch springs as a set.

Clutch spring free length
50.00 mm (1.97 in)
Clutch spring free length limit
48.00 mm (1.89 in)

EAM30112

CHECKING THE CLUTCH HOUSING

1. Check:
   - Clutch housing dogs
     Damage/pitting/wear → Deburr the clutch housing dogs or replace the clutch housing.

TIP

Pitting on the clutch housing dogs will cause erratic clutch operation.

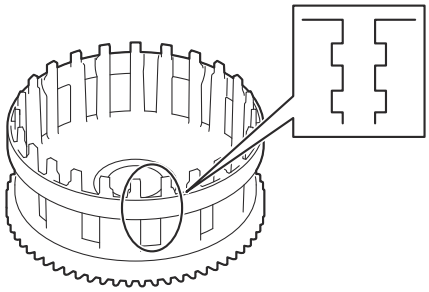

G088994

EAM30113

CHECKING THE CLUTCH BOSS

1. Check:
   - Clutch boss splines
     Damage/pitting/wear → Replace the clutch boss.

TIP

Pitting on the clutch boss splines will cause erratic clutch operation.

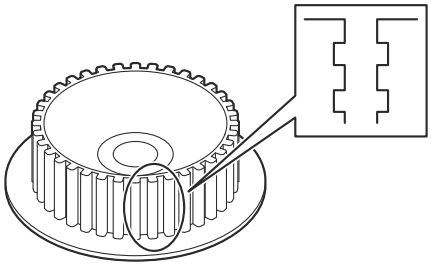

G088995

EAM30114

CHECKING THE PRESSURE PLATE

1. Check:
   - Pressure plate
     Crack/damage → Replace.

EAM30115

CHECKING THE PUSH LEVER SHAFT

1. Check:
   - Push lever shaft
     Wear/damage → Replace.

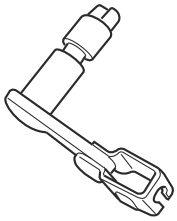

EAM30484

CHECKING THE PUSH RODS

1. Check:
   - Push rod 1 “1”
   - Bearing “2”
   - Washer “3”
   - Push rod 2 “4”
     Cracks/damage/wear → Replace.

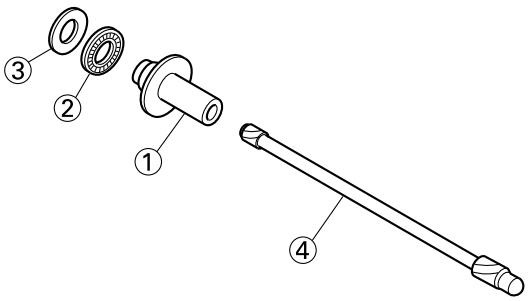

2. Measure:
   - Push rod 2 bending limit
     Out of specification → Replace.

	Push rod bending limit **0.30 mm (0.012 in)**

EAM30117

CHECKING THE PRIMARY DRIVE GEAR

1. Check:
   - Primary drive gear
     Damage/wear → Replace the primary drive and primary driven gears as a set.
     Excessive noise during operation → Replace the primary drive and primary driven gears as a set.
2. Check:
   - Primary-drive-gear-to-primary-driven-gear free play
     Free play exists → Replace the primary drive and primary driven gears as a set.

EAM30118

CHECKING THE PRIMARY DRIVEN GEAR

1. Check:
   - Primary driven gear
     Damage/wear → Replace the primary drive and primary driven gears as a set.
     Excessive noise during operation → Replace the primary drive and primary driven gears as a set.

EAM30121

INSTALLING THE CLUTCH

1. Install:
   - Bearing “1”
   - Oil seal “2” New
   - Push lever shaft “3”
   - Copper washer “4” New
   - Push lever shaft bolt “5”

	Push lever shaft bolt **6 N·m (0.6 kgf·m, 4.4 lb·ft)**

TIP

Apply the lithium-soap-based grease on the oil seal lip.

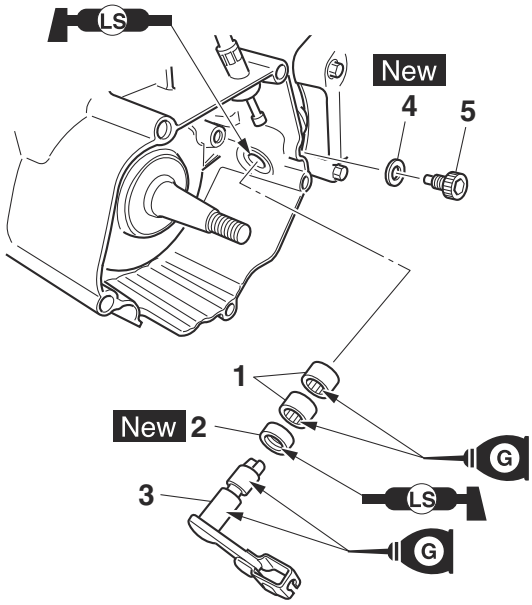

2. Install:
   - Thrust washer [D = ø42 mm (1.65 in)] “1”
   - Spacer “2”
   - Bearing “3”
   - Primary driven gear “4”

TIP

Apply the transmission oil on the bearing, spacer and primary driven gear inner circumference.

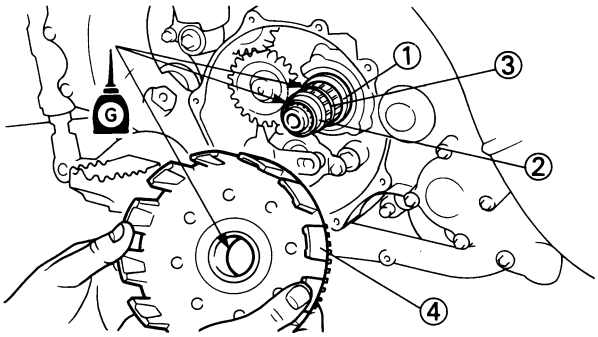

3. Install:
   - Thrust washer [D = ø44 mm (1.73 in)] “1”
   - Clutch boss “2”

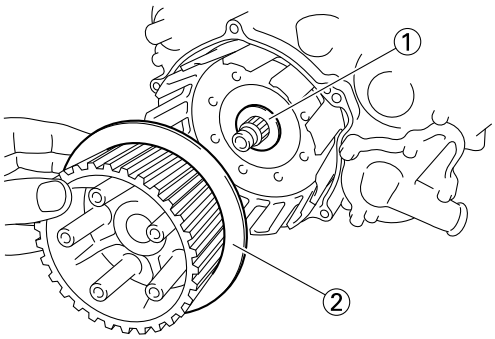

4. Install:
   - Lock washer “1” New
   - Clutch boss nut “2”

	Clutch boss nut **75 N·m (7.5 kgf·m, 55 lb·ft)**

TIP

Use the clutch holder “3” to hold the clutch boss.

	Clutch holder **90890-04199** **Universal clutch holder** **YM-91042**

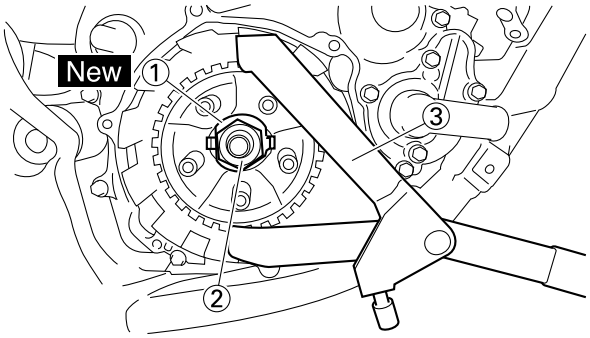

5. Bend the lock washer “1” tab.

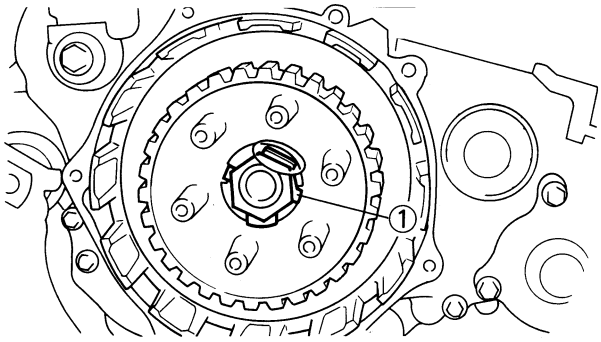

6. Install:
   - Friction plate “1”
   - Clutch plate “2”

TIP
- Install the clutch plates and friction plates alternately on the clutch boss, starting with a friction plate and ending with a friction plate.
- Apply the transmission oil on the friction plates and clutch plates.

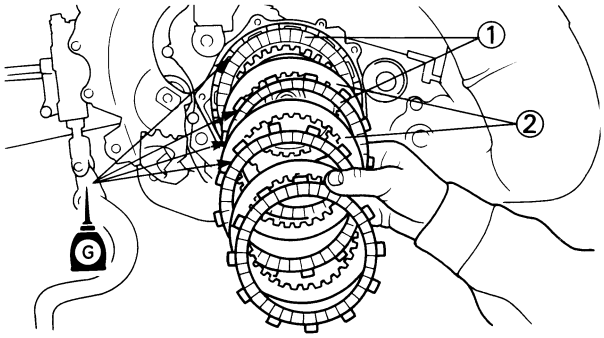

7. Install:
   - Bearing "1"
   - Washer "2"
   - Circlip "3" New
     (to the push rod 1 "4")

TIP
Apply the transmission oil on the bearing, washer and push rod 1.

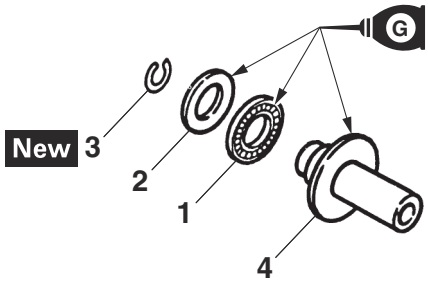

8. Install:
   - Push rod 2 "1"
   - Push rod 1 "2"

TIP
- Apply the transmission oil on the ends of the push rod 2.
- Install the push rod 2 with its smaller end "a" toward you.

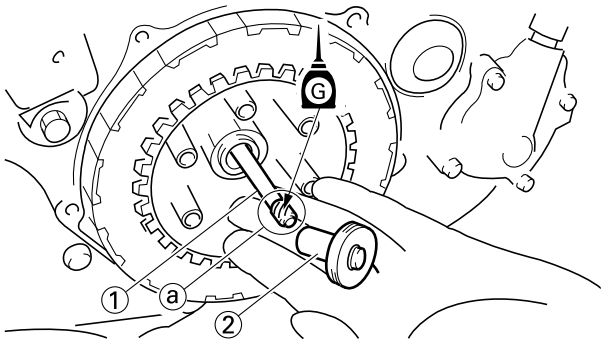

9. Install:
   - Pressure plate "1"

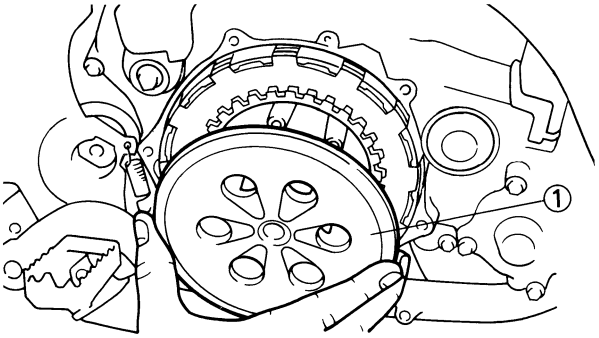

10. Install:
    - Clutch spring
    - Clutch spring bolt

	Clutch spring bolt **10 N·m (1.0 kgf·m, 7.4 lb·ft)**

TIP
Tighten the bolts in stage, using a crisscross pattern.

11. Install:
    - O-ring "1" New
      (to the clutch cover)

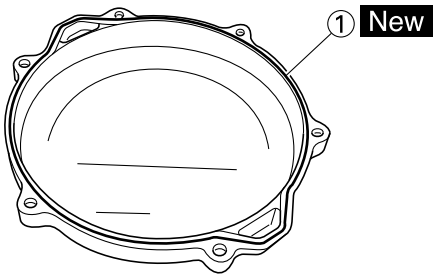

12. Install:
    - Clutch cover
    - Clutch cover bolt

	Clutch cover bolt **10 N·m (1.0 kgf·m, 7.4 lb·ft)**

TIP

Tighten the bolts in stage, using a crisscross pattern.

13. Install:
- O-ring "1" New
- Clutch cable "2"

TIP

Apply the lithium-soap-based grease on the O-ring.

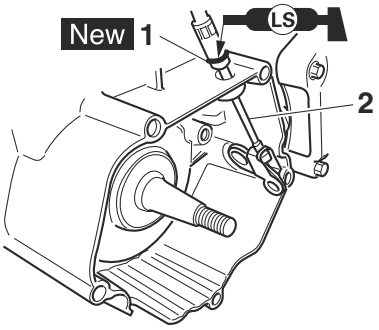

EAM20113

SHIFT SHAFT

Removing the shift shaft and stopper lever

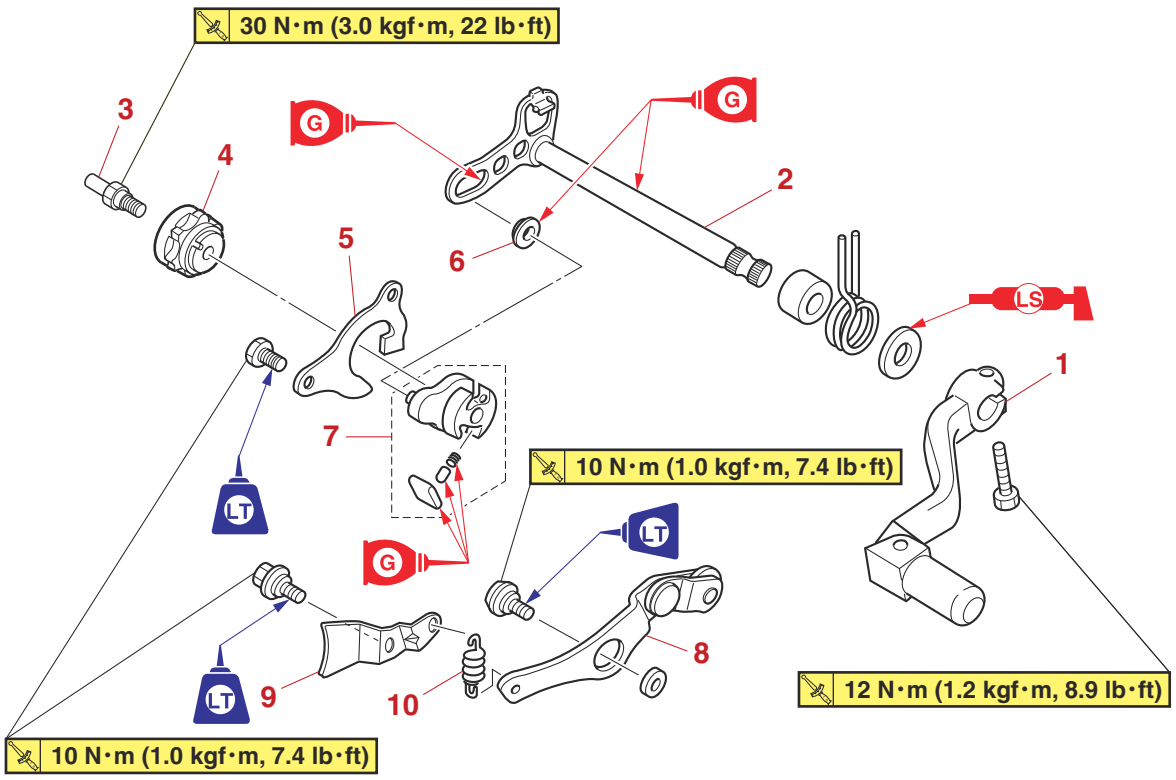

Order	Job/Parts to remove	Q'ty	Remarks
1	Shift pedal	1	
2	Shift shaft	1	
3	Segment bolt	1	
4	Segment	1	
5	Shift guide	1	
6	Roller	1	
7	Shift lever assembly	1	
8	Stopper lever	1	
9	Holder	1	
10	Tension spring	1	

EAM30124

REMOVING THE SEGMENT

1. Remove:
   - Segment bolt “1”
   - Segment “2”

TIP

Turn the segment counterclockwise until it stops and loosen the segment bolt.

ECA24670

NOTICE

If the segment gets an impact, the stopper lever may be damaged. Take care not to give an impact to it when removing the bolt.

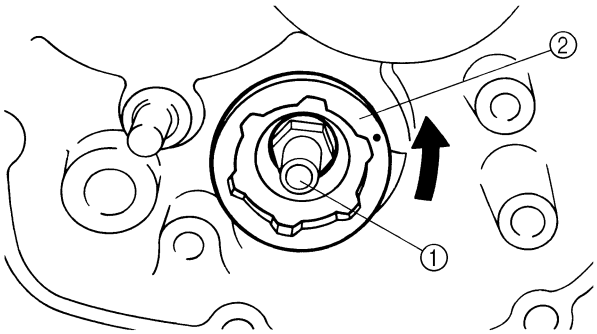

EAM30125

CHECKING THE SHIFT SHAFT

1. Check:
   - Shift shaft “1”
     Bends/damage/wear → Replace.
   - Shift shaft spring “2”
     Damage/wear → Replace.

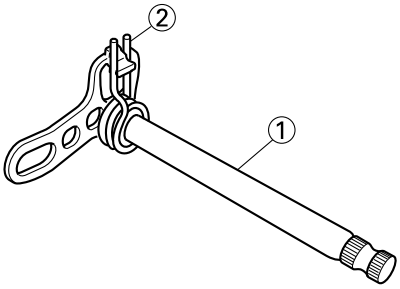

2. Check:
   - Shift guide “1”
   - Shift lever “2”
   - Pawl “3”
   - Pawl pin “4”
   - Spring “5”
     Wear/damage → Replace.

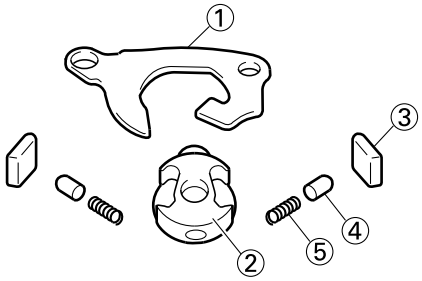

EAM30127

CHECKING THE STOPPER LEVER

1. Check:
   - Stopper lever “1”
     Wear/damage → Replace.
   - Tension spring “2”
     Broken → Replace.

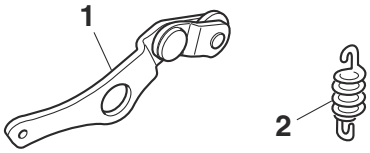

EAM30131

INSTALLING THE SHIFT SHAFT

1. Install:
   - Tension spring “1”
   - Holder “2”
   - Holder bolt “3”

Holder bolt
10 N·m (1.0 kgf·m, 7.4 lb·ft)
LOCTITE®

   - Washer “4”
   - Stopper lever “5”
   - Stopper lever bolt “6”

Stopper lever bolt
10 N·m (1.0 kgf·m, 7.4 lb·ft)
LOCTITE®

TIP

Align the stopper lever roller with the slot on segment.

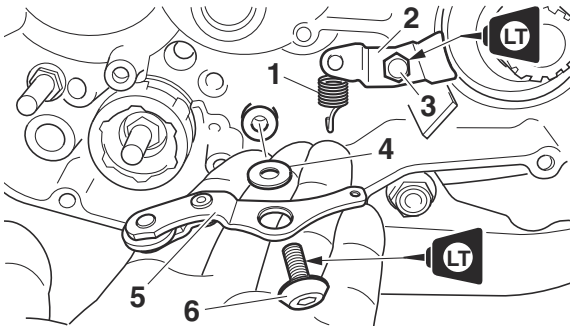

2. Install:
   - Segment “1”
   - Segment bolt

	Segment bolt **30 N·m (3.0 kgf·m, 22 lb·ft)**

TIP
- Align the notch “a” on the segment with the pin “b” on the shift drum.
- With the stopper lever pushed down, install the segment.

ECA24680

NOTICE

If the segment gets an impact, the stopper lever may be damaged. Take care not to give an impact to it when tightening the bolt.

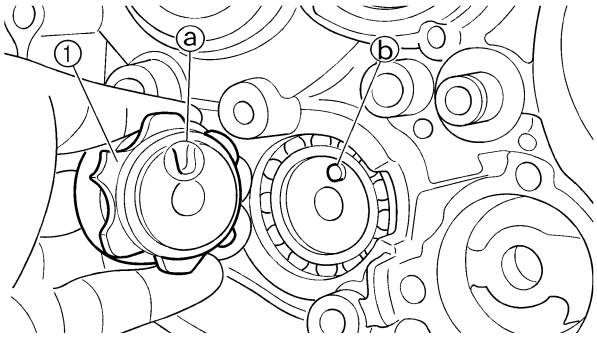

3. Install:
   - Spring “1”
   - Pawl pin “2”
   - Pawl “3”
     (to the shift lever)

TIP
Apply the transmission oil on the spring, pawl pin and pawl.

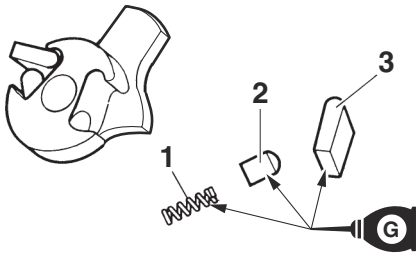

4. Install:
   - Shift lever assembly
     (to the shift guide)
5. Install:
   - Shift lever assembly “1”
   - Shift guide “2”

TIP
The shift lever assembly is installed at the same time as the shift guide.

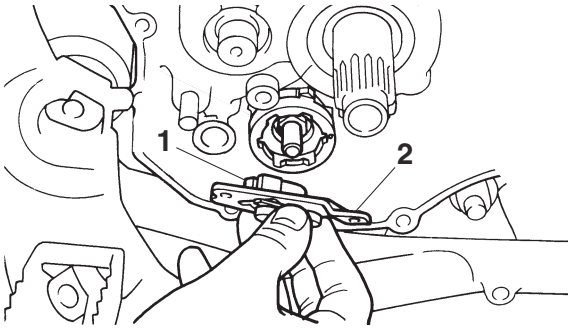

6. Tighten:
   - Shift guide bolt “1”

	Shift guide bolt **10 N·m (1.0 kgf·m, 7.4 lb·ft)** **LOCTITE®**

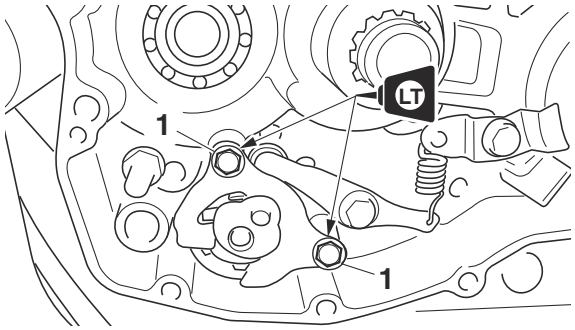

7. Install:
   - Roller “1”
   - Washer “2”
   - Shift shaft “3”

TIP
Apply the transmission oil on the roller and shift

shaft.

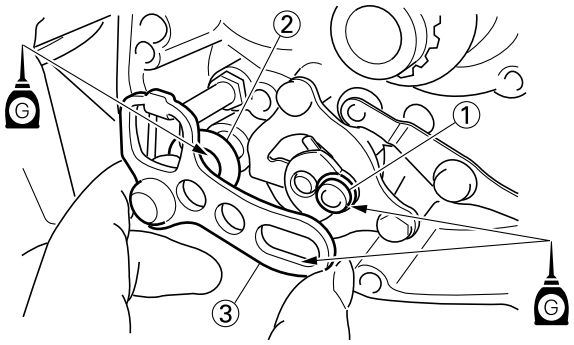

8. Install:
   - Shift pedal “1”
   - Shift pedal bolt “2”

	Shift pedal bolt **12 N·m (1.2 kgf·m, 8.9 lb·ft)**

TIP

Install the shift pedal so that the top of the shift pedal outer diameter “a” is highest without exceeding the line “b” connecting the center of the shift shaft and bottom of the crankcase cover screw (left) “3”.

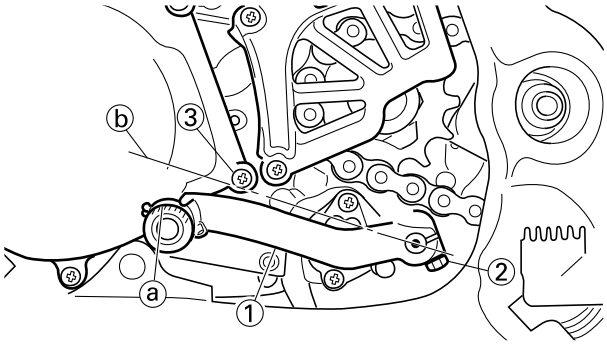

EAM20116

CRANKCASE

Separating the crankcase

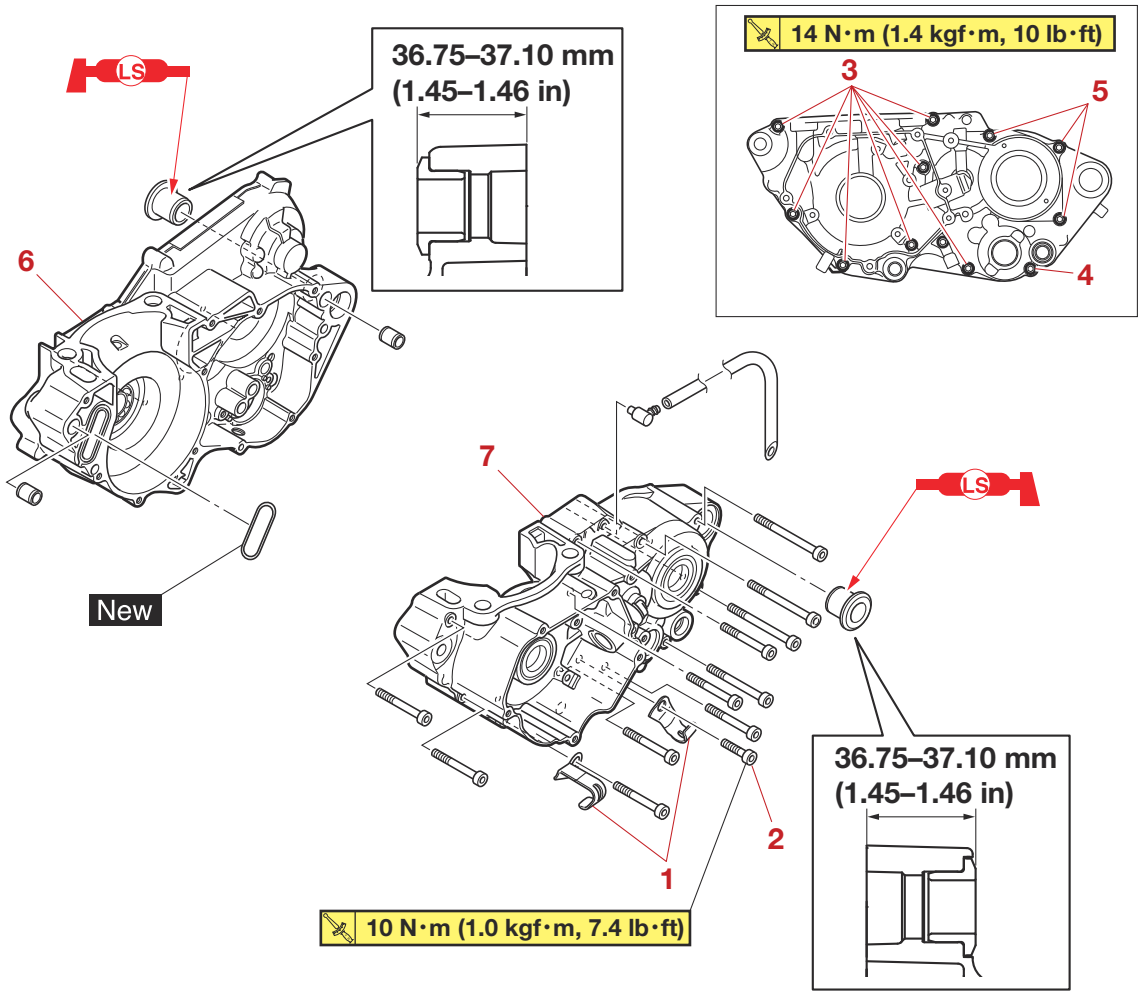

Order	Job/Parts to remove	Q'ty	Remarks
	Transmission		Refer to "TRANSMISSION" on page 5-43.
	Shift drum/Shift fork		Refer to "TRANSMISSION" on page 5-43.
1	Holder	2	
2	Neutral switch lead holder bolt	1	
3	Crankcase bolt	7	[L = 50 mm (1.97 in)]
4	Crankcase bolt	1	[L = 60 mm (2.36 in)]
5	Crankcase bolt	3	[L = 70 mm (2.76 in)]
6	Crankcase (right)	1	
7	Crankcase (left)	1	

Removing the bearing and oil seal

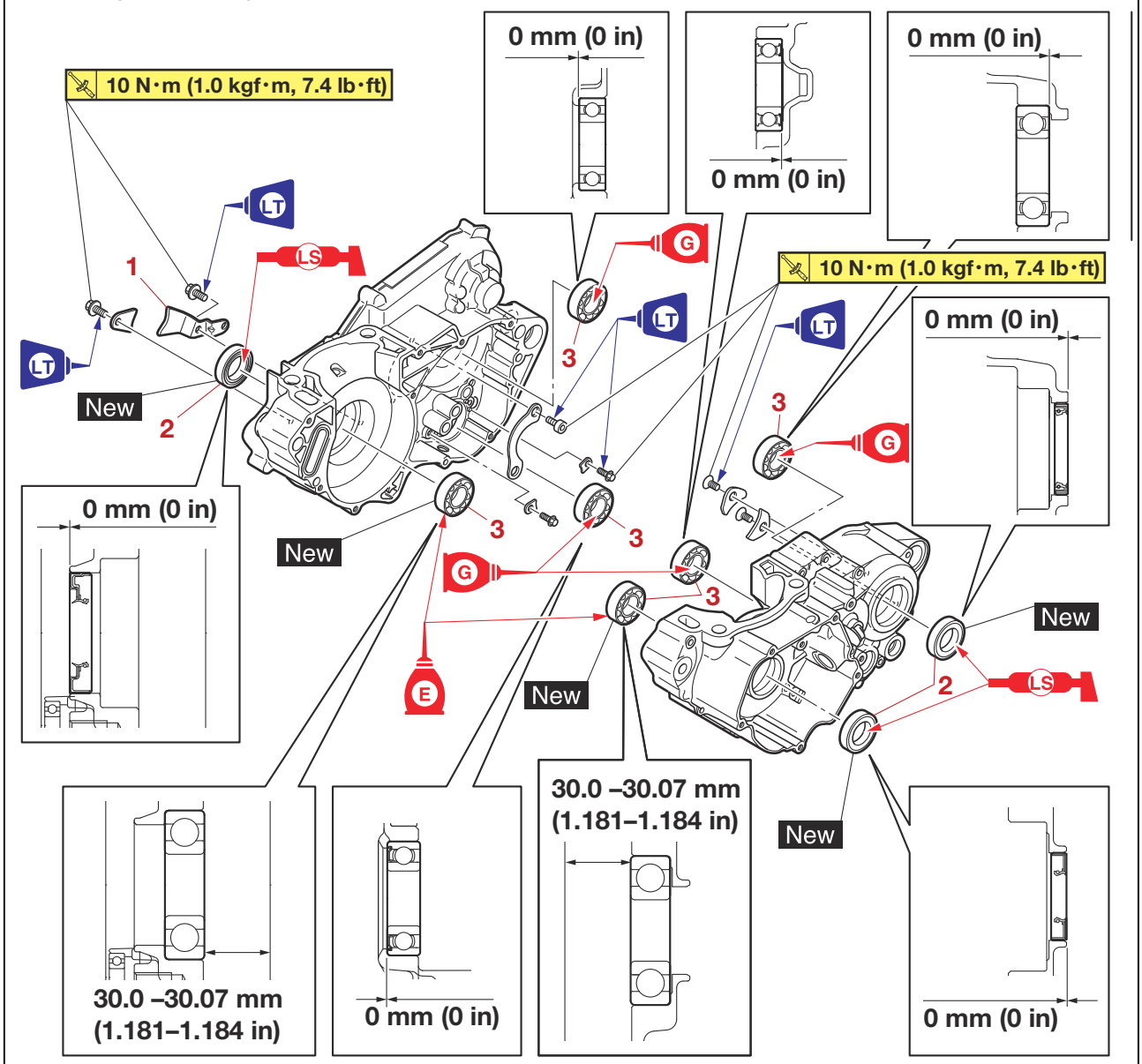

Order	Job/Parts to remove	Q'ty	Remarks
1	Holder	1	
2	Oil seal	3	
3	Bearing	6	

EAM30147

DISASSEMBLING THE CRANKCASE

1. Remove:
   - Crankcase (right) “1”
     (with the crankcase separating tool “2”)

	Crankcase separating tool **90890-01135** **Crankcase separator** **YU-01135-B**

TIP

- Make appropriate bolts “3” as shown available by yourself and attach the tool with them.
- Fully tighten the tool holding bolts, but make sure the tool body is parallel with the case. If necessary, one screw may be backed out slightly to level tool body.
- As pressure is applied, alternately tap on the engine mounting boss and transmission shafts.

ECA24690

NOTICE

Use soft hammer to tap on the case half. Tap only on reinforced portions of case. Do not tap on gasket mating surface. Work slowly and carefully. Make sure the case halves separate evenly. If the cases do not separate, check for a remaining case bolt or fitting. Do not force.

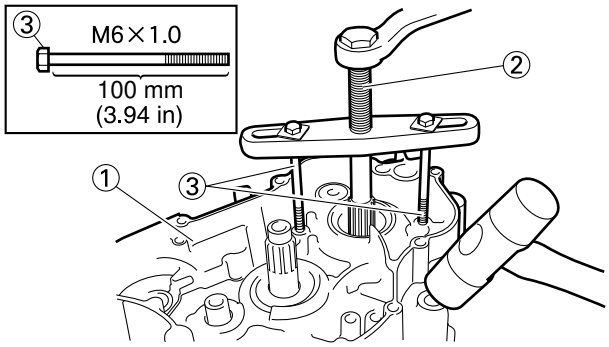

2. Remove:
   - Bearing “1”

TIP

- Remove the bearing from the crankcase by pressing its inner race.
- Do not use the removed bearing.

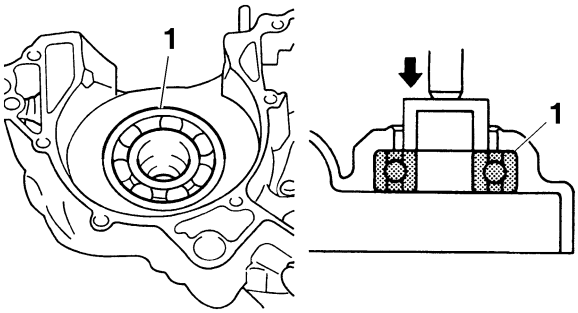

EAM30150

CHECKING THE CRANKCASE

1. Wash:
   - Crankcase

TIP

- Wash the crankcase in a mild solvent.
- Remove any remaining gasket from the crankcase mating surface.

2. Check:
   - Crankcase
     Crack/damage → Replace.
   - Oil delivery passages
     Obstruction → Blow out with compressed air.

EAM30152

ASSEMBLING THE CRANKCASE

1. Install:
   - Bearing “1” New
     (to the crankcase (left/right))

TIP

- Apply the engine oil on the bearing.
- Install the bearing by pressing its outer race parallel.

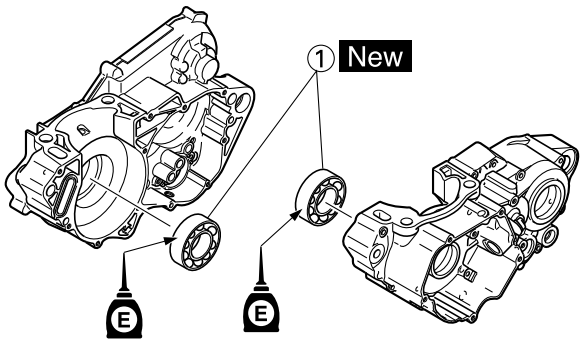

2. Install:
   - Oil seal (left) “1” New
   - Oil seal (right) “2” New

TIP

- Apply the lithium-soap-based grease on the oil seal lip.
- Install the oil seal with its manufacture’s marks

or numbers facing outward.

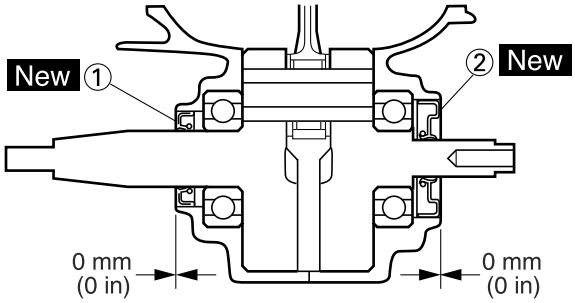

3. Install:
   - O-ring "1" New
     (to the crankcase (right) "2")

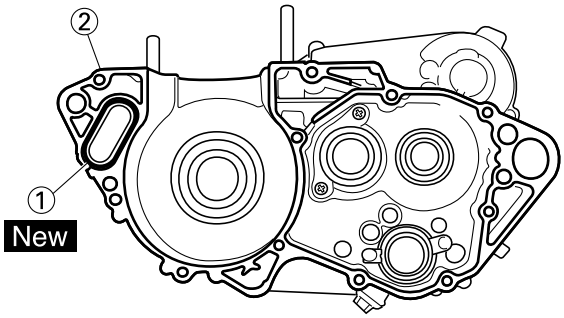

4. Apply:
   - Sealant
     (on the crankcase (right) "1")

	Yamaha bond No. 1215 **90890-85505** **Three bond No. 1215®**

TIP

Clean the contacting surface of crankcase (left/right) before applying the sealant.

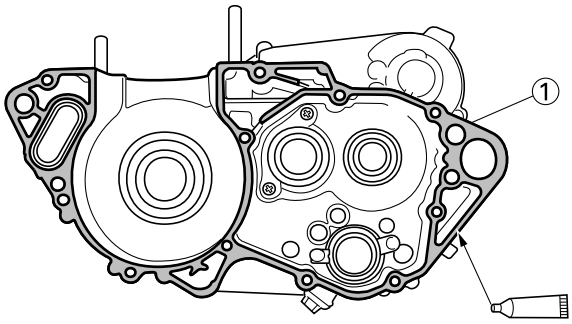

5. Install:
   - Dowel pin "1"
   - Crankcase (right) "2"
     (to the crankcase (left) "3")

TIP

- Fit the crankcase (right) onto the crankcase (left). Tap lightly on the case with soft hammer.
- When installing the crankcase, the connecting rod should be positioned at TDC (top dead center).

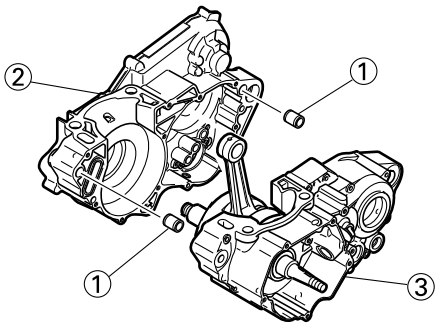

6. Install:
   - Holder "1"
   - Holder bolt "2"

	Holder bolt **10 N·m (1.0 kgf·m, 7.4 lb·ft)** **LOCTITE®**

   - Crankcase bolt

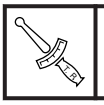	**Crankcase bolt** **14 N·m (1.4 kgf·m, 10 lb·ft)**

TIP

Tighten the crankcase bolts in stage, using a crisscross pattern.

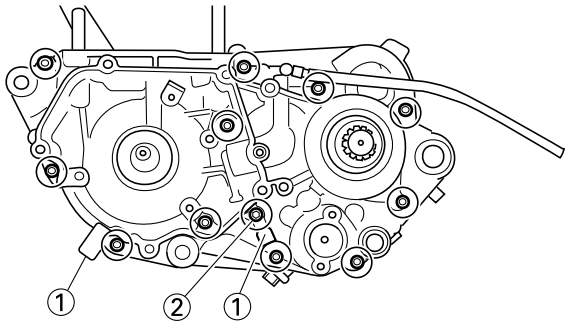

EAM20193

CRANKSHAFT

Removing the crankshaft assembly

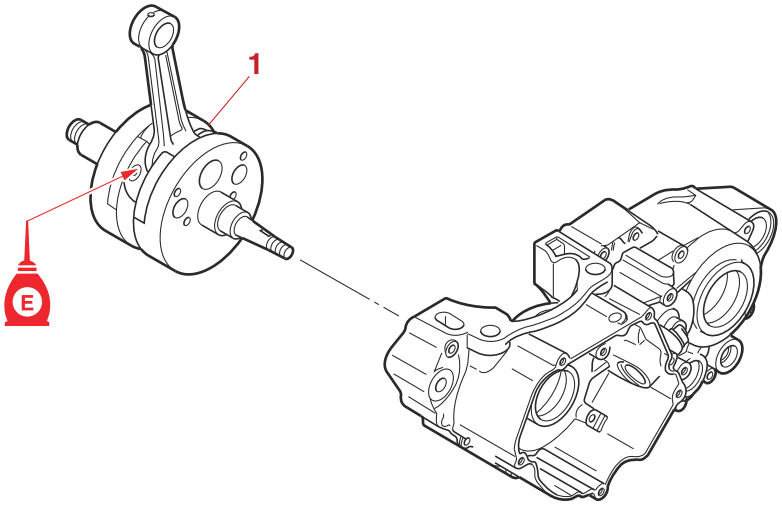

Order	Job/Parts to remove	Q'ty	Remarks
	Crankcase		Separate. Refer to "CRANKCASE" on page 5-37.
	Transmission		Refer to "TRANSMISSION" on page 5-43.
1	Crankshaft assembly	1	

EAM30491

REMOVING THE CRANKSHAFT

1. Remove:
   - Crankshaft “1”
     (with the crankcase separating tool “2”)

	Crankcase separating tool **90890-01135** **Crankcase separator** **YU-01135-B**

TIP

Make appropriate bolts “3” as shown available by yourself and attach the tool with them.

ECA22290

NOTICE

Do not use a hammer to drive out the crankshaft.

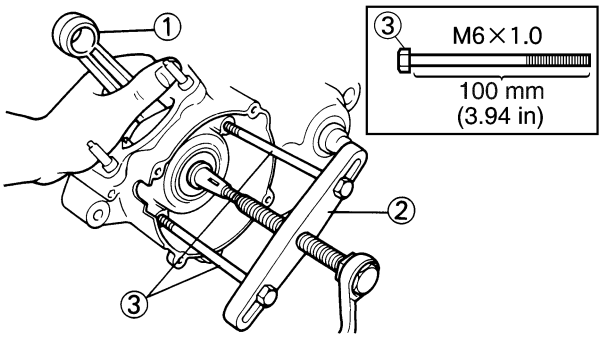

EAM30492

CHECKING THE CRANKSHAFT

1. Measure:
   - Crankshaft runout “a”
     Out of specification → Replace the crankshaft.

TIP

Turn the crankshaft slowly.

	Runout limit **0.050 mm (0.0020 in)**

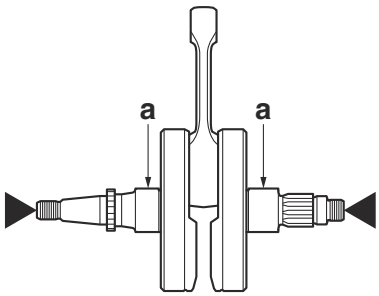

2. Measure:
   - Crank assembly width “a”
     Out of specification → Replace the crankshaft.

	Crank assembly width **59.95–60.00 mm (2.360–2.362 in)**

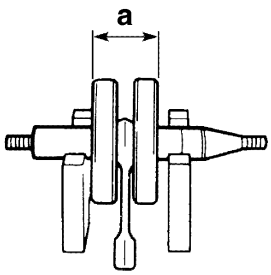

EAM30493

INSTALLING THE CRANKSHAFT

1. Install:
   - Crankshaft assembly

TIP

Install the crankshaft assembly with the crankshaft installer pot “1”, crankshaft installer bolt “2”, and adapter (M12) “3”.

	Crankshaft installer pot **90890-01274** **Installing pot** **YU-90058** **Crankshaft installer bolt** **90890-01275** **Bolt** **YU-90060** **Adapter (M12)** **90890-01278** **Adapter #3** **YU-90063**

TIP

Hold the connecting rod at top dead center (TDC) with one hand while turning the nut of the crankshaft installer bolt with the other. Turn the crankshaft installer bolt until the crankshaft assembly bottoms against the bearing.

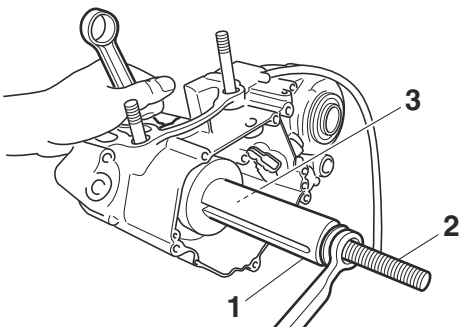

EAM20118

TRANSMISSION

Removing the transmission, shift drum assembly, and shift forks

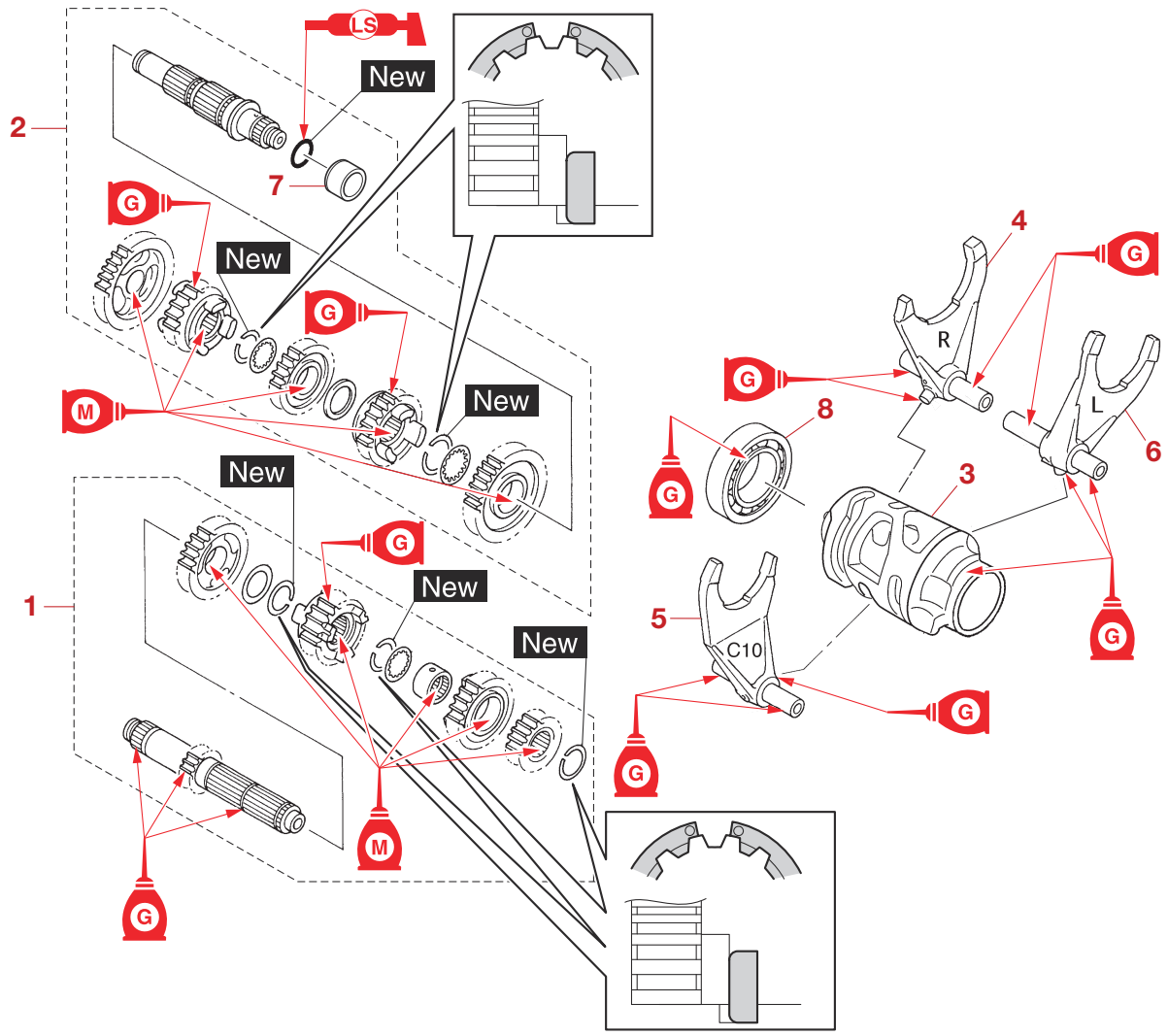

Order	Job/Parts to remove	Q'ty	Remarks
	Engine		Refer to "ENGINE REMOVAL" on page 5-1.
	Crankcase		Refer to "CRANKCASE" on page 5-37.
1	Main axle	1	
2	Drive axle	1	
3	Shift drum	1	
4	Shift fork 3 (R)	1	
5	Shift fork 2 (C10)	1	
6	Shift fork 1 (L)	1	
7	Collar	1	
8	Bearing	1	

EAM30153

REMOVING THE TRANSMISSION

1. Remove:
   - Main axle “1”
   - Drive axle “2”
   - Shift drum
   - Shift fork 3
   - Shift fork 2
   - Shift fork 1

TIP

- Remove assembly carefully. Note the position of each part. Pay particular attention to the location and direction of shift forks.
- Remove the main axle, drive axle, shift drum and shift fork all together by tapping lightly on the transmission drive axle with a soft hammer.

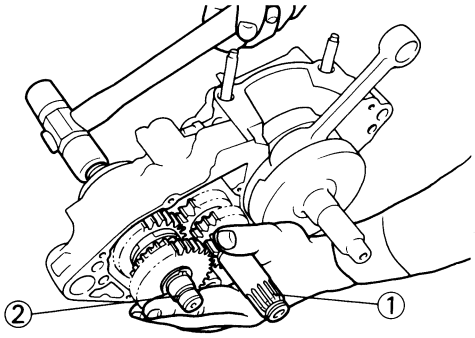

EAM30154

CHECKING THE SHIFT FORKS

1. Check:
   - Shift fork “1”
     Wear/damage/scratches → Replace.

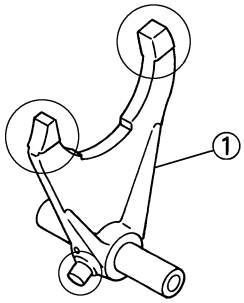

2. Check:
   - Shift fork movement
     Unsmooth operation → Replace shift fork.

TIP

For a malfunctioning shift fork, replace not only the shift fork itself but the two gears each adjacent to the shift fork.

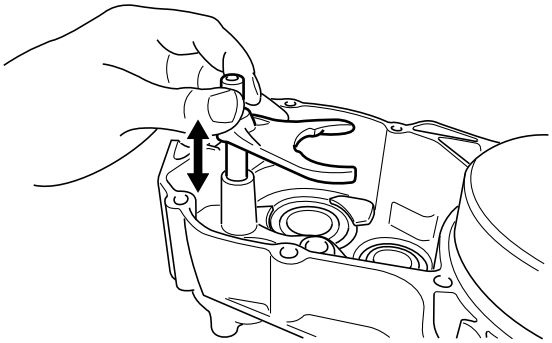

EAM30155

CHECKING THE SHIFT DRUM ASSEMBLY

1. Check:
   - Shift drum groove
     Damage/scratches/wear → Replace the shift drum assembly.
   - Shift drum segment
     Damage/wear → Replace the shift drum assembly.

EAM30156

CHECKING THE TRANSMISSION

1. Measure:
   - Main axle runout
     (with a centering device and dial gauge “1”)
     Out of specification → Replace the main axle.

	Main axle runout limit **0.01 mm (0.0004 in)**

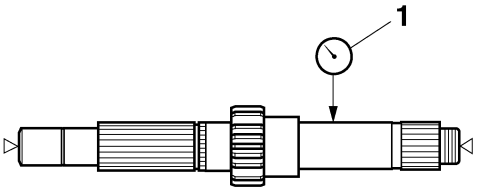

2. Measure:
   - Drive axle runout
     (with a centering device and dial gauge “1”)
     Out of specification → Replace the drive axle.

	Drive axle runout limit **0.01 mm (0.0004 in)**

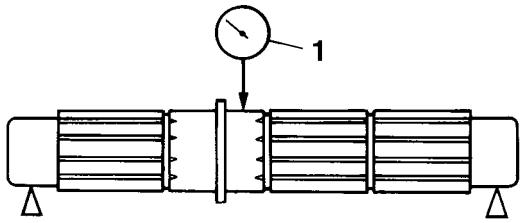

3. Check:
   - Transmission gear
     Blue discoloration/pitting/wear → Replace the defective gear(s).
   - Transmission gear dog
     Cracks/damage/rounded edges → Replace the defective gear(s).
4. Check:
   - Transmission gear movement
     Rough movement → Replace the defective gear(s).

EAM30157

INSTALLING THE TRANSMISSION

1. Install:
   - 5th pinion gear (21T) "1"
   - 3rd pinion gear (18T) "2"
   - Collar "3"
   - 4th pinion gear (22T) "4"
   - 2nd pinion gear (15T) "5"
     (to the main axle "6")

TIP

Apply the molybdenum disulfide oil on the inner and end surface of the idler gear and on the inner surface of the sliding gear, then install.

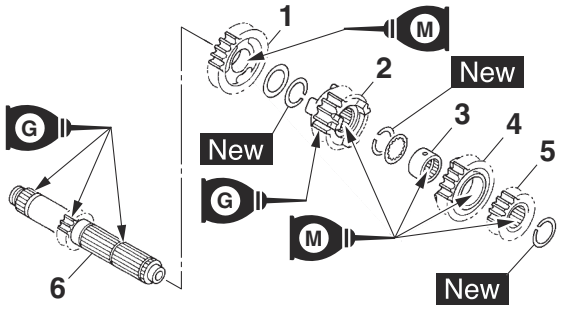

2. Install:
   - 2nd wheel gear (23T) "1"
   - 4th wheel gear (24T) "2"
   - 3rd wheel gear (23T) "3"
   - 5th wheel gear (20T) "4"
   - 1st wheel gear (27T) "5"
   - O-ring "6" New
     (to the drive axle "7")

TIP

- Apply the molybdenum disulfide oil on the inner and end surface of the idler gear and on the inner surface of the sliding gear, then install.
- Apply the lithium-soap-based grease on the O-ring.

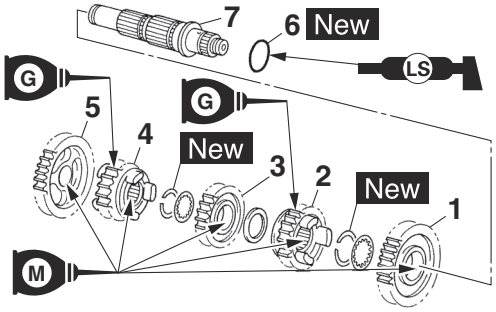

3. Install:
   - Washer "1"
   - Circlip "2" New

TIP

- Be sure the circlip sharp-edged corner "a" is positioned opposite side to the washer and gear "b".
- Be sure the circlip end "c" is positioned at axle spline groove "d".

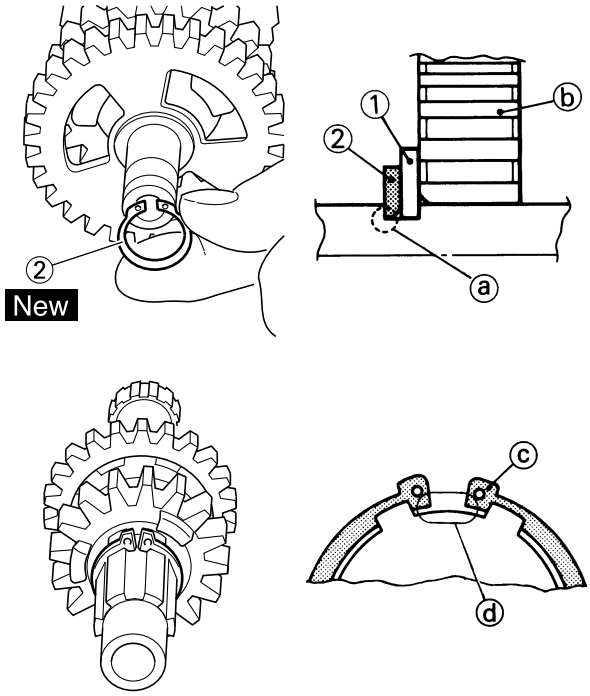

4. Install:
   - Collar "1"

TIP

- Apply the lithium-soap-based grease on the oil seal lip.
- When installing the collar into the crankcase,

pay careful attention to the crankcase oil seal lip.
- Install the spacer with its chamfered side “a” facing the crankcase.

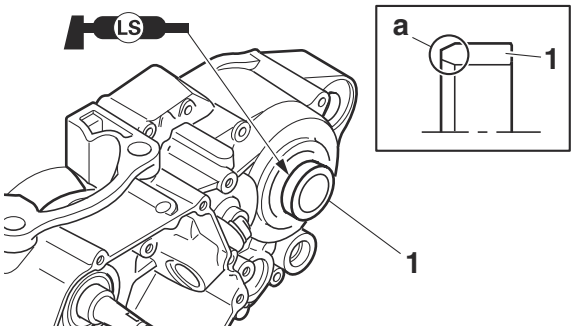

5. Install:
   - Shift fork 1 (L) “1”
   - Shift fork 2 (C10) “2”
   - Shift fork 3 (R) “3”
   - Shift drum “4”
     (to the main axle and drive axle)

TIP
- Apply the molybdenum disulfide oil on the shift fork grooves.
- Mesh the shift fork 1 (L) with the 4th wheel gear “5” and the shift fork 3 (R) with the 5th wheel gear “6” on the drive axle.
- Mesh the shift fork 2 (C10) with the 3rd pinion gear “7” on the main axle.

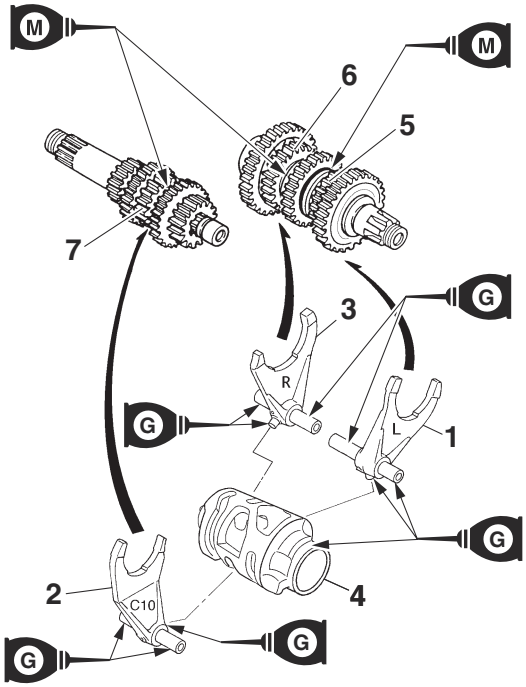

6. Install:
   - Transmission assembly “1”
     (to the crankcase (left) “2”)

TIP
Apply the transmission oil on the bearings and guide bars.

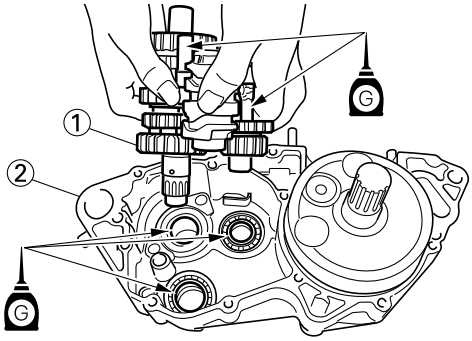

7. Check:
   - Shifter operation
   - Transmission operation
     Unsmooth operation → Repair.

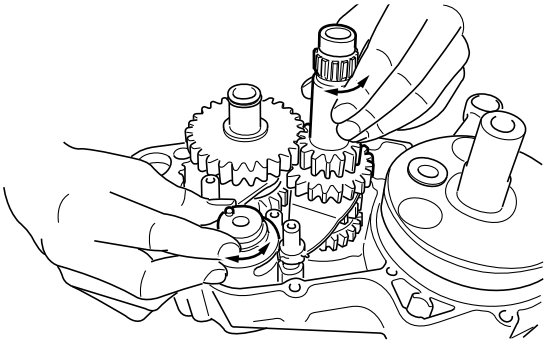

COOLING SYSTEM

COOLING SYSTEM DIAGRAMS.....6-1

RADIATOR..... 6-3
CHECKING THE RADIATOR..... 6-4
INSTALLING THE RADIATOR.....6-4

WATER PUMP.....6-6
DISASSEMBLING THE WATER PUMP..... 6-7
CHECKING THE WATER PUMP.....6-7
ASSEMBLING THE WATER PUMP..... 6-7

EAM20186

COOLING SYSTEM DIAGRAMS

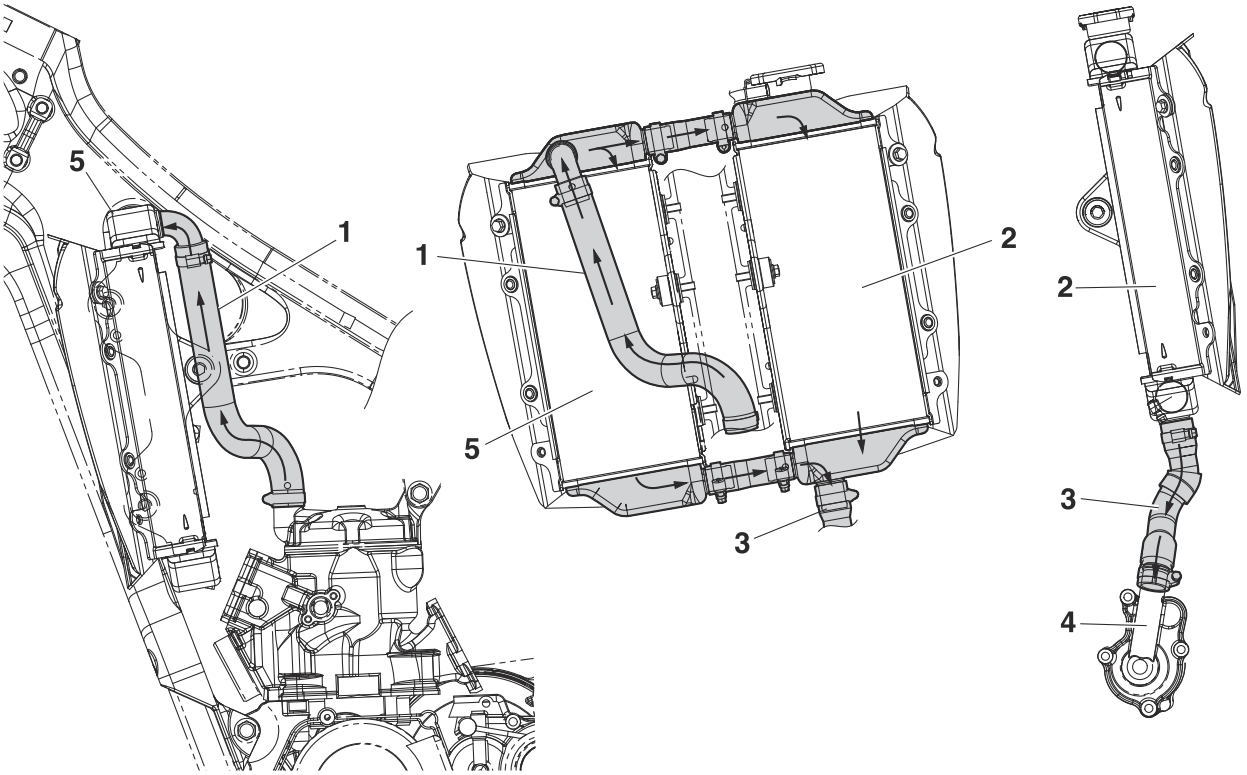

1. Radiator hose 1
2. Radiator (right)
3. Radiator hose 4
4. Water pump
5. Radiator (left)

EAM20138

RADIATOR

Removing the radiator

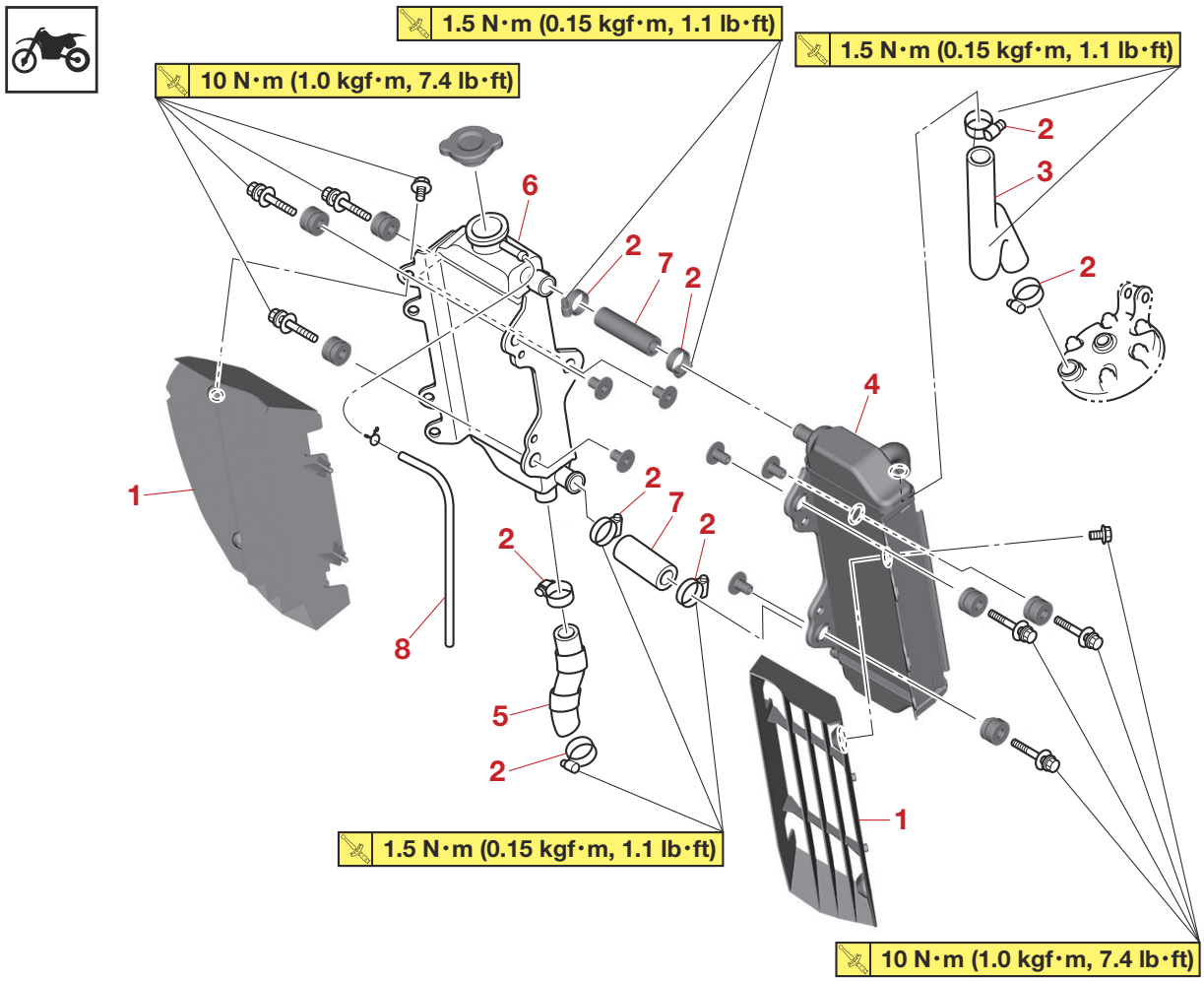

Order	Job/Parts to remove	Q'ty	Remarks
	Coolant		Drain. Refer to "CHANGING THE COOLANT" on page 3-12.
	Seat		Refer to "GENERAL CHASSIS" on page 4-1.
	Fuel tank		Refer to "FUEL TANK" on page 7-1.
1	Radiator guard	2	
2	Radiator hose clamp	8	Loosen.
3	Radiator hose 1	1	
4	Radiator (left)	1	
5	Radiator hose 4	1	
6	Radiator (right)	1	
7	Radiator hose 2	2	
8	Radiator breather hose	1	

EAM30341

CHECKING THE RADIATOR

EWA13030

WARNING

A hot radiator is under pressure. Therefore, do not remove the radiator cap when the engine is hot. Scalding hot fluid and steam may be blown out, which could cause serious injury. When the engine has cooled, open the radiator cap as follows:
Place a thick rag or a towel over the radiator cap and slowly turn the radiator cap counterclockwise toward the detent to allow any residual pressure to escape. When the hissing sound has stopped, press down on the radiator cap and turn it counterclockwise to remove.

1. Check:
   - Radiator fin
     Obstructions → Clean.
     Apply compressed air to the rear of the radiator.
     Damage → Repair or replace.

TIP

Correct any flattened fins with a thin, flat-head screwdriver.

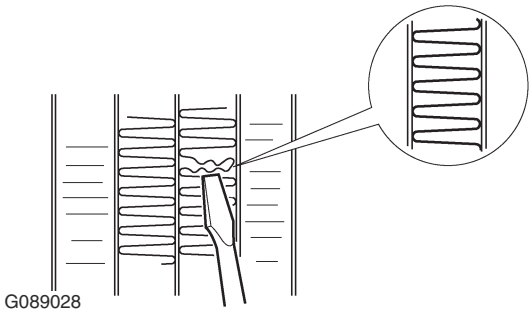

G089028

2. Check:
   - Radiator hose
   - Radiator pipe
     Crack/damage → Replace.
3. Check:
   - Radiator cap valve opening pressure
     a. Install the radiator cap tester adapter "2" and the radiator cap tester "1" to the radiator cap "3", and activate the tester to check whether it can stay for 5 to 10 seconds within standard pressure values.

TIP

Before attaching the cap to the tester, apply water to its sealing surface.

Radiator cap valve opening pressure
107.9–137.3 kPa (1.08–1.37 kgf/cm², 15.6–19.9 psi)

No stay → Replace.

Radiator cap tester
90890-01325
Mityvac cooling system tester kit
YU-24460-A
Radiator cap tester adapter
90890-01352
Pressure tester adapter
YU-33984

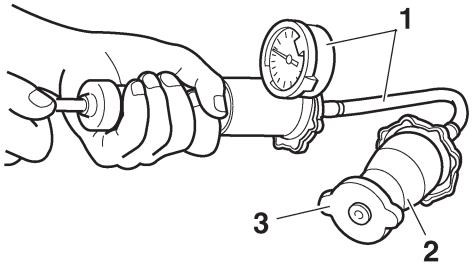

G089029

EAM30506

INSTALLING THE RADIATOR

1. Fill:
   - Cooling system
     (with the specified amount of the recommended coolant)
     Refer to "CHANGING THE COOLANT" on page 3-12.
2. Check:
   - Cooling system
     Leaks → Repair or replace any faulty part.
3. Install:
   - Radiator cap tester "1"
   - Radiator cap tester adapter "2"

Radiator cap tester
90890-01325
Mityvac cooling system tester kit
YU-24460-A
Radiator cap tester adapter
90890-01352
Pressure tester adapter
YU-33984

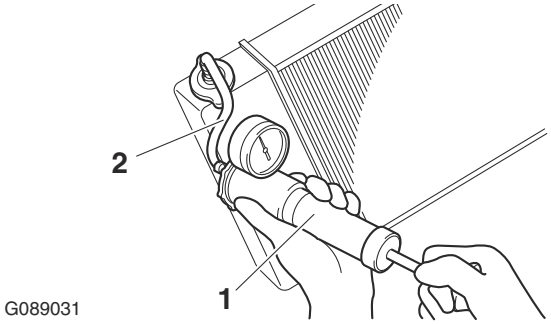

4. Activate the tester to apply the test pressure.

	Test pressure value **137.3 kPa (1.37 kgf/cm^2, 19.9 psi)**

ECA24270

NOTICE

- **Do not apply such a high pressure as exceeds the test pressure.**
- **Make sure that a checkup after the cylinder head gasket is replaced is made after 3 minutes of warm-up.**
- **Make sure that coolant is filled up to the upper level beforehand.**

5. Check:
   - Pressure value
     No stay for 5 to 10 seconds at the test pressure value → Correct.
   - Radiator
   - Radiator hose connections
     Coolant leaks → Correct or replace.
   - Radiator hose
     Bulges → Replace.

EWA19090

WARNING

When the radiator cap tester is removed, coolant will spout; therefore, cover it with a cloth beforehand.

EAM20139

WATER PUMP

Removing the water pump

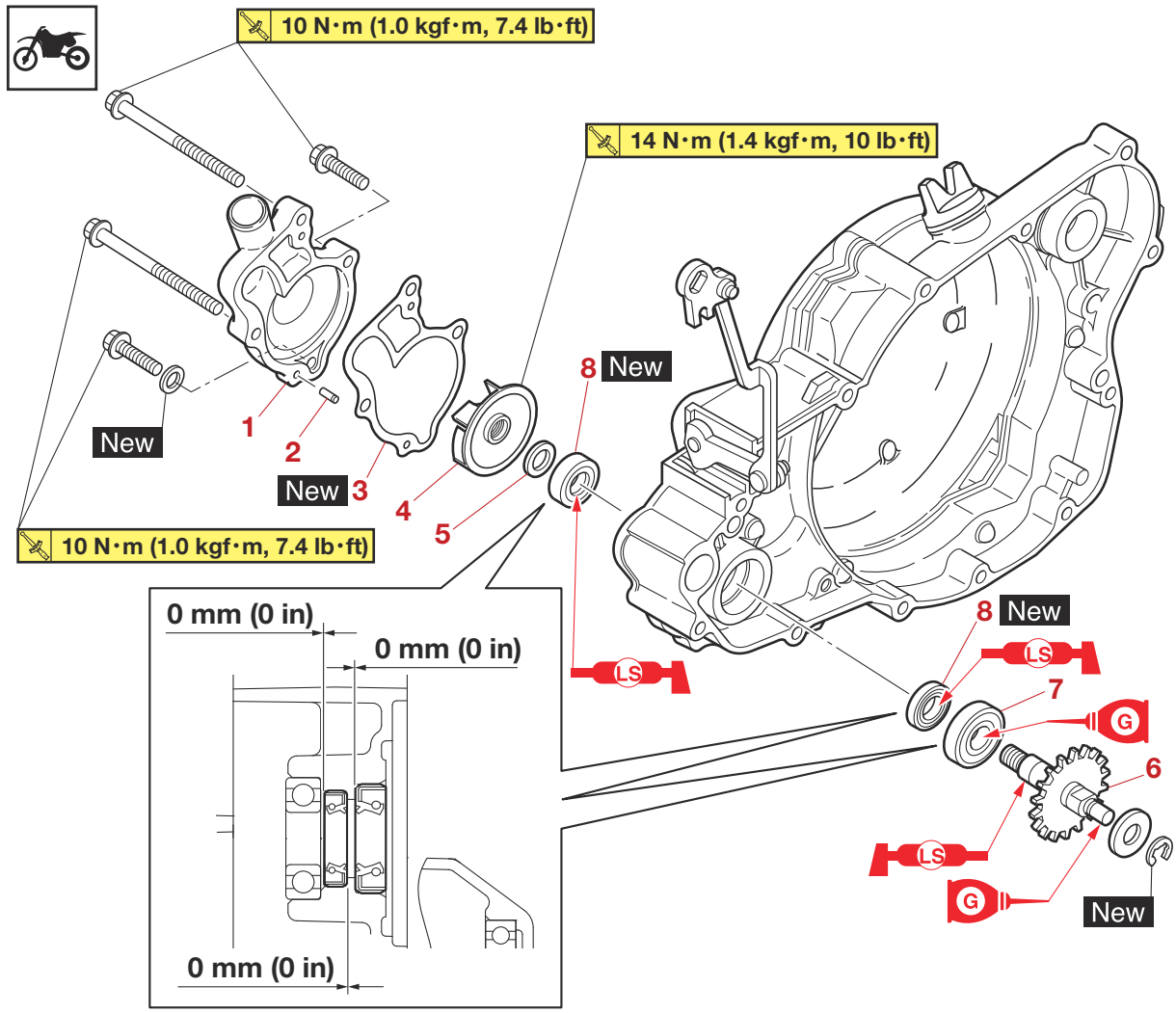

Order	Job/Parts to remove	Q'ty	Remarks
	Crankcase cover (right)		Refer to "KICKSTARTER" on page 5-18.
1	Water pump housing	1	
2	Dowel pin	2	
3	Gasket	1	
4	Impeller	1	
5	Washer	1	
6	Impeller shaft assembly	1	
7	Bearing	1	
8	Oil seal	2	

EAM30494

DISASSEMBLING THE WATER PUMP

TIP

- Remove the oil seal when the coolant level changes frequently more than usual, coolant has discolored, or engine oil has become milky.
- Do not use the removed oil seal.

1. Remove:
   - Oil seal "1"

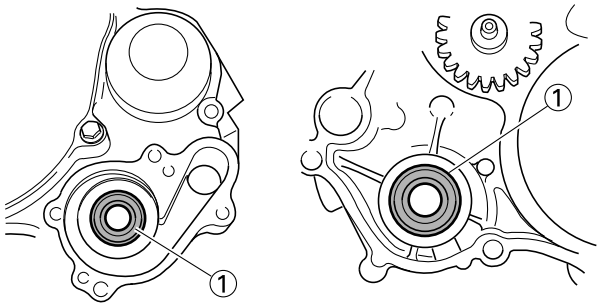

EAM30259

CHECKING THE WATER PUMP

1. Check:
   - Water pump housing cover
   - Impeller shaft
   - Impeller
     Cracks/damage/wear → Replace.
2. Check:
   - Bearing "1"
     Rotate the inner race with your finger.
     Rough spot/seizure → Replace.

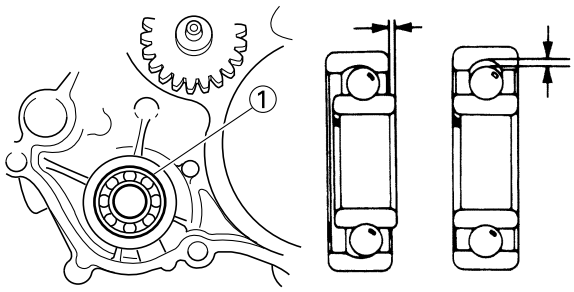

EAM30262

ASSEMBLING THE WATER PUMP

1. Install:
   - Oil seal "1" New

TIP

- Apply the lithium-soap-based grease on the oil seal lip.
- Install the oil seal with its manufacture's marks or numbers facing the crankcase cover (right).

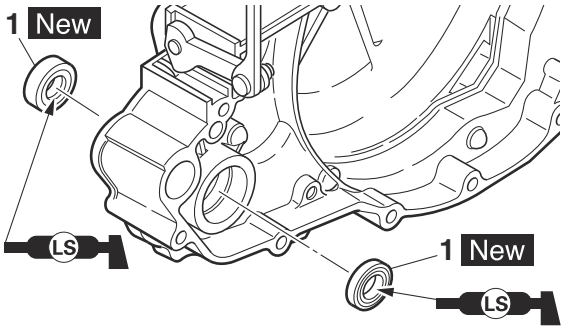

2. Install:
   - Bearing "1"

TIP

Install the bearing by pressing its outer race parallel.

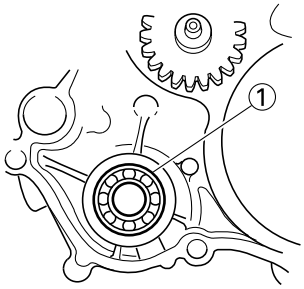

3. Install:
   - Impeller shaft assembly "1"
   - Washer "2"
   - Circlip New
   - Impeller "3"

	Impeller **14 N·m (1.4 kgf·m, 10 lb·ft)**

TIP

- Take care so that the oil seal lip is not damaged or the spring does not slip off its position.
- When installing the impeller shaft, apply the lithium-soap-based grease on the oil seal lip and impeller shaft. And install the shaft while turning it.
- Hold the impeller shaft on its width across the flats "a" with spanners, etc. and install the impeller.

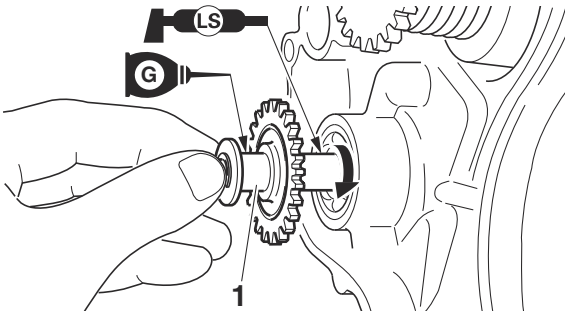

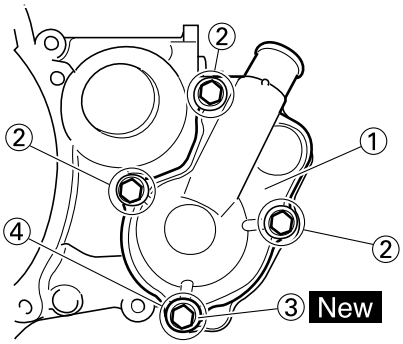

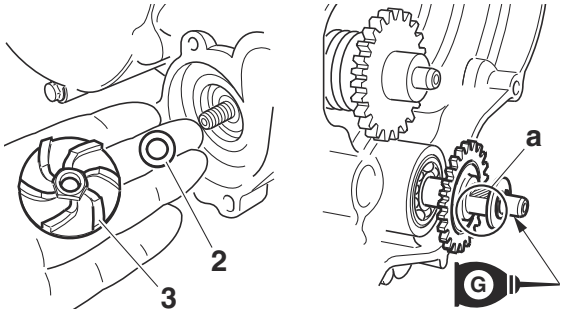

4. Install:
   - Dowel pin “1”
   - Gasket “2” New

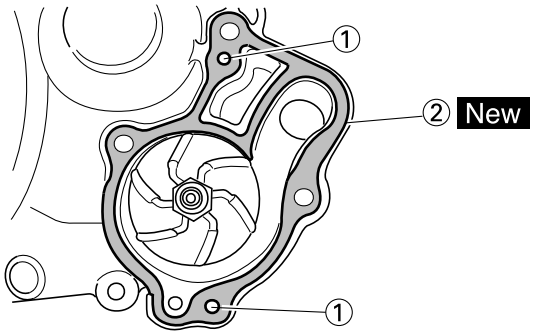

5. Install:
   - Water pump housing “1”
   - Water pump housing cover bolt “2”

	Water pump housing cover bolt **10 N·m (1.0 kgf·m, 7.4 lb·ft)**

- Washer “3” New
- Coolant drain bolt “4”

	Coolant drain bolt **10 N·m (1.0 kgf·m, 7.4 lb·ft)**

FUEL SYSTEM

FUEL TANK..... 7-1

AIR FILTER..... 7-2

CARBURETOR..... 7-3
HANDLING NOTE..... 7-6
CHECKING THE CARBURETOR..... 7-6
CHECKING THE REED VALVE..... 7-7
INSTALLING THE REED VALVE..... 7-7
ASSEMBLING THE CARBURETOR..... 7-8
INSTALLING THE CARBURETOR..... 7-10
MEASURING AND ADJUSTING THE FUEL LEVEL..... 7-11

EAM20140

FUEL TANK

Removing the fuel tank

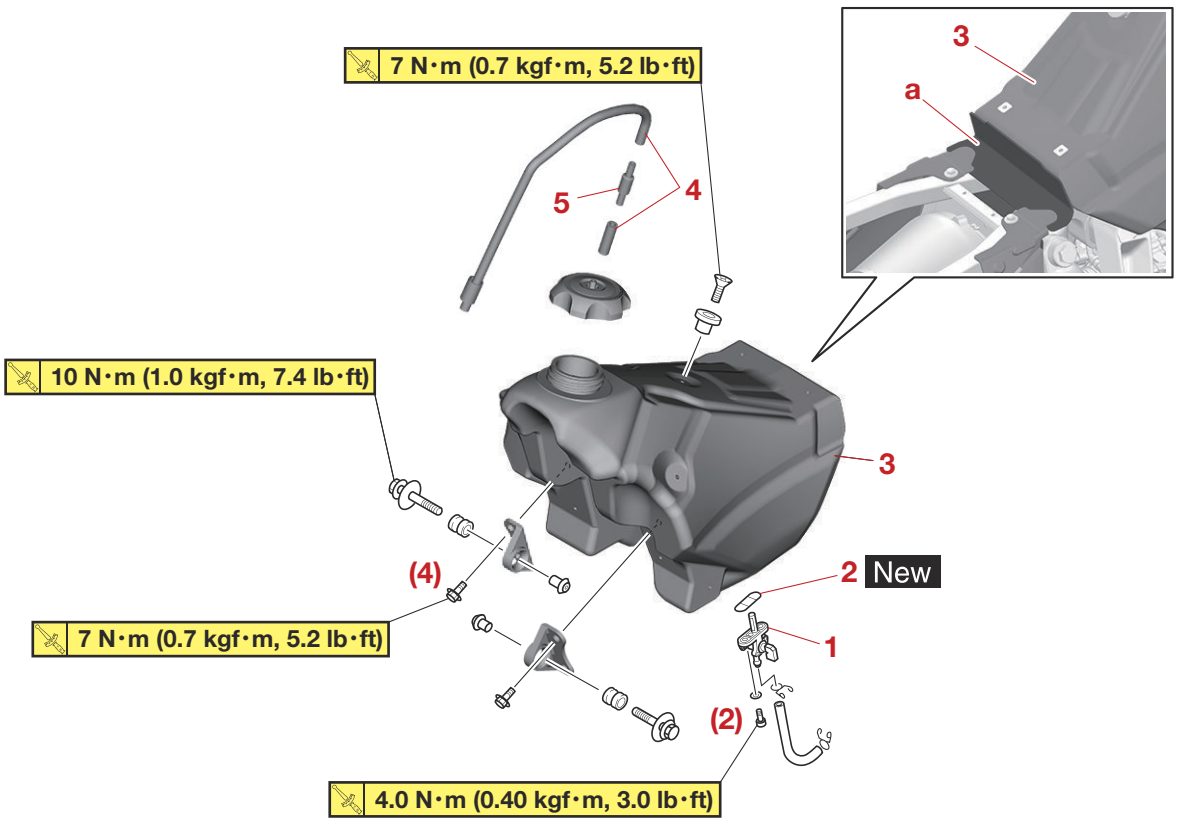

Order	Job/Parts to remove	Q'ty	Remarks
	Seat		Refer to "GENERAL CHASSIS" on page 4-1.
	Side cover (left/right)		
	Air scoop (left/right)		
1	Fuel cock assembly	1	
2	O-ring	1	
3	Fuel tank	1	Install the fuel tank "3" so that the rubber cover "a" is placed behind the fuel tank "3" along the vehicle.
4	Fuel tank breather hose	2	
5	Power valve joint	1	

EAM20201

AIR FILTER

Removing the air filter element

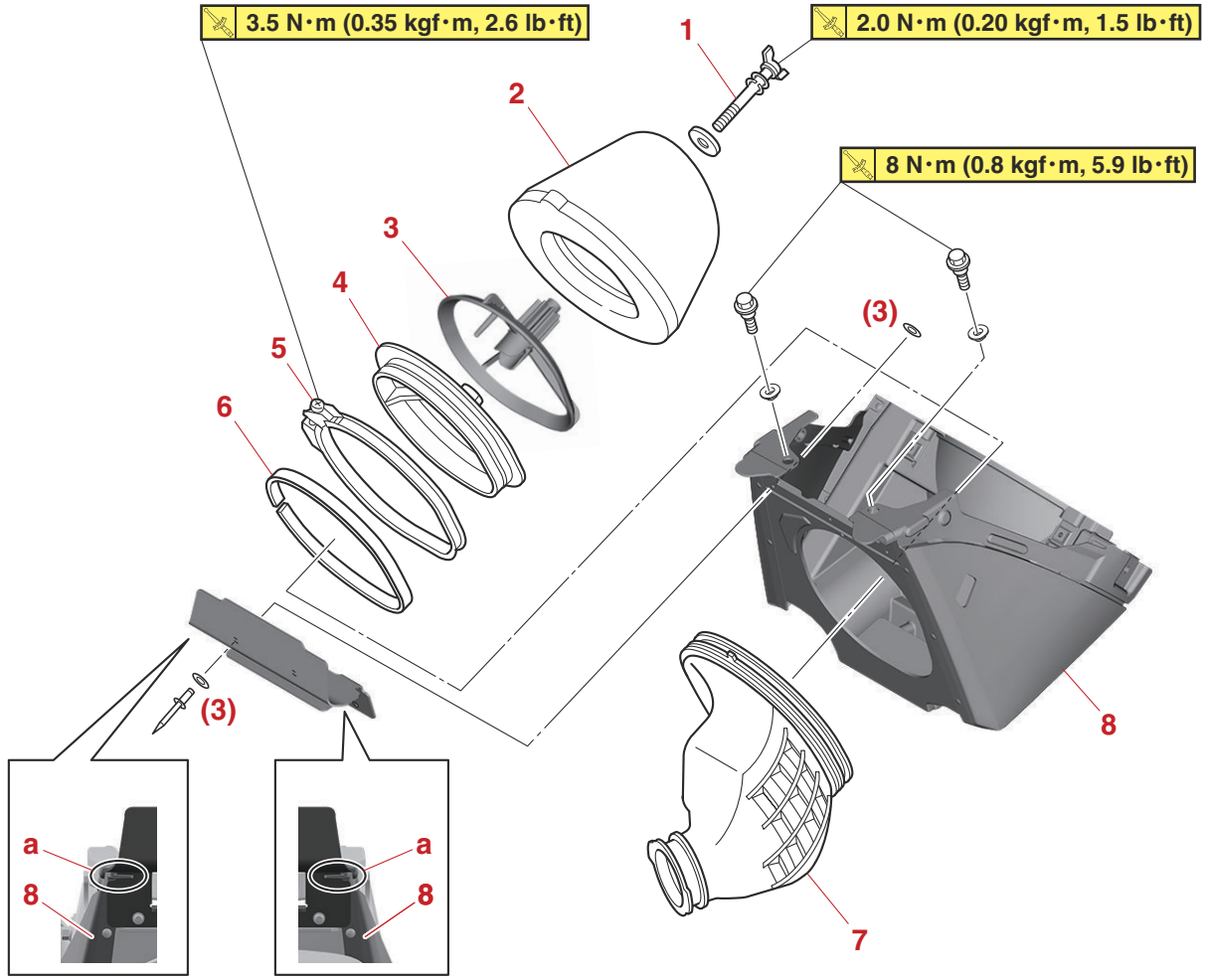

Order	Job/Parts to remove	Q'ty	Remarks
	Seat		Refer to "GENERAL CHASSIS" on page 4-1.
	Rear frame		Refer to "REAR SHOCK ABSORBER ASSEMBLY" on page 4-61.
1	Fitting bolt	1	
2	Air filter element	1	
3	Air filter guide	1	
4	Guide holder	1	
5	Band	1	
6	Spacer	1	
7	Air filter joint	1	
8	Air filter case	1	Place the rubber cover into the guide of the air filter case "8" as shown "a".

EAM20194

CARBURETOR

Removing the carburetor and reed valve

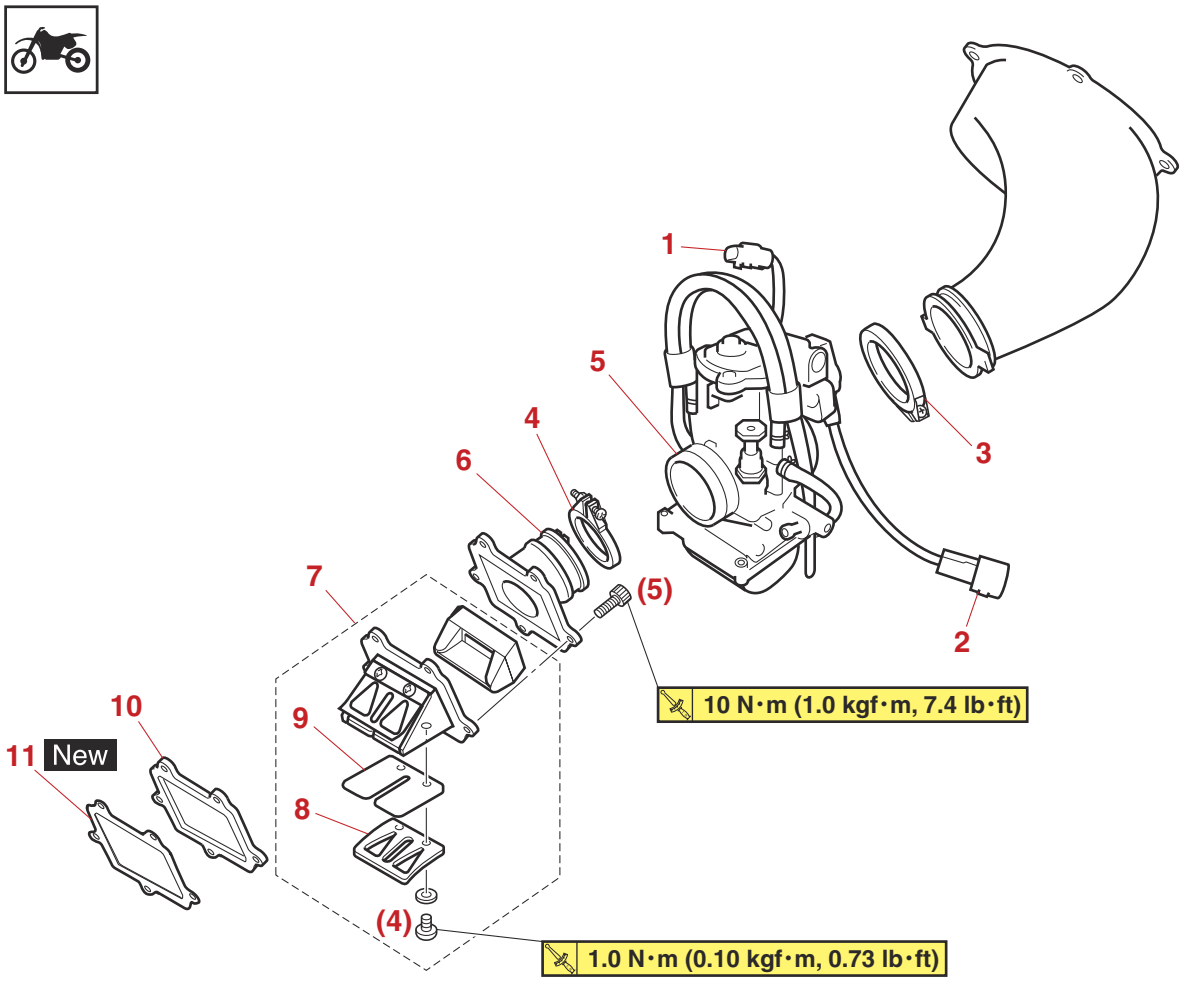

Order	Job/Parts to remove	Q'ty	Remarks
	Fuel tank		Refer to "FUEL TANK" on page 7-1.
1	Solenoid valve lead	1	Disconnect.
2	Throttle position sensor lead	1	Disconnect.
3	Air filter clamp	1	
4	Carburetor joint clamp	1	
5	Carburetor assembly	1	
6	Carburetor joint	1	
7	Reed valve assembly	1	
8	Reed valve stopper	2	
9	Reed valve	2	
10	Reed valve plate	1	
11	Gasket	1	

Disassembling the carburetor

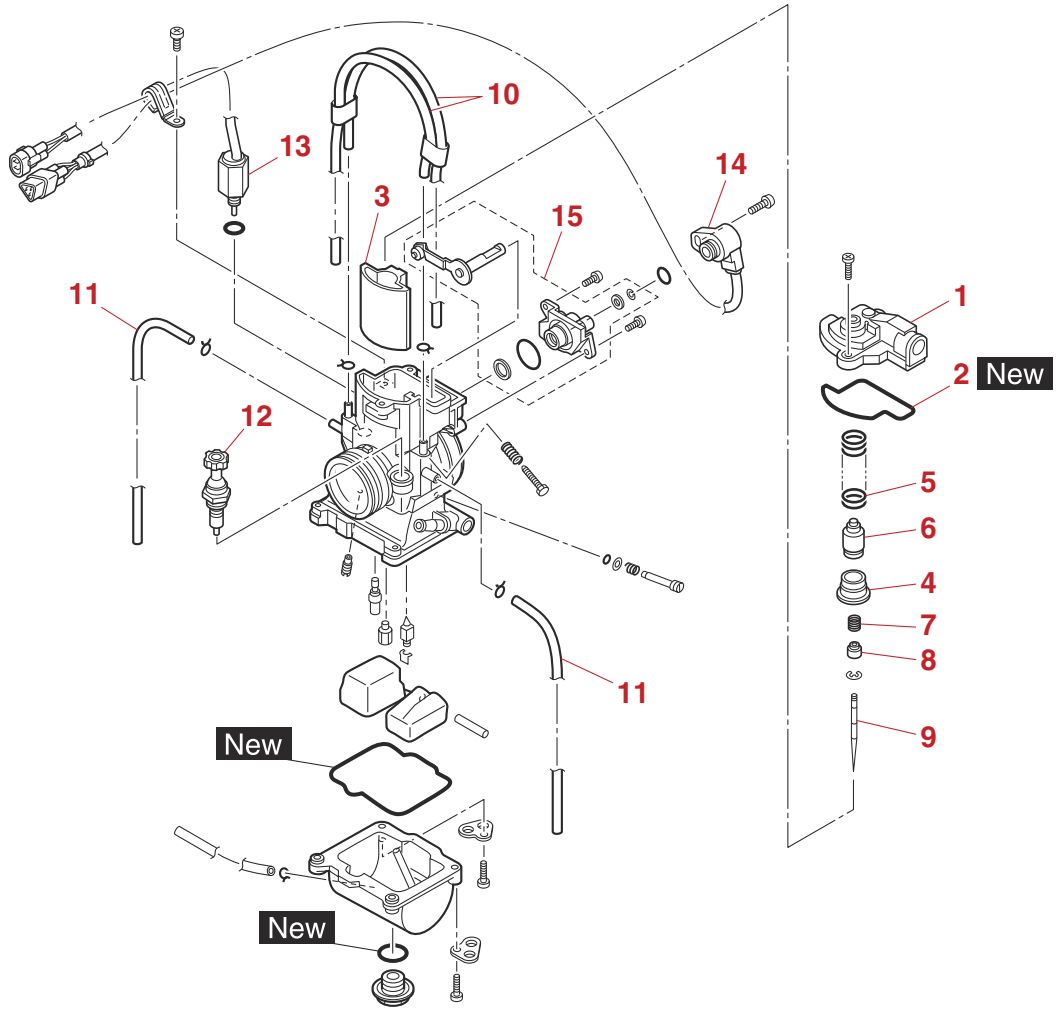

Order	Job/Parts to remove	Q'ty	Remarks
1	Mixing chamber top	1	
2	Gasket	1	
3	Throttle valve	1	
4	Ring	1	
5	Throttle valve spring	1	
6	Jet needle holder	1	
7	Spring	1	
8	Collar	1	
9	Jet needle	1	
10	Carburetor breather hose	2	
11	Overflow hose	2	
12	Starter plunger	1	
13	Fuel cut solenoid valve	1	
14	Throttle position sensor	1	
15	Lever comp	1	

Disassembling the carburetor

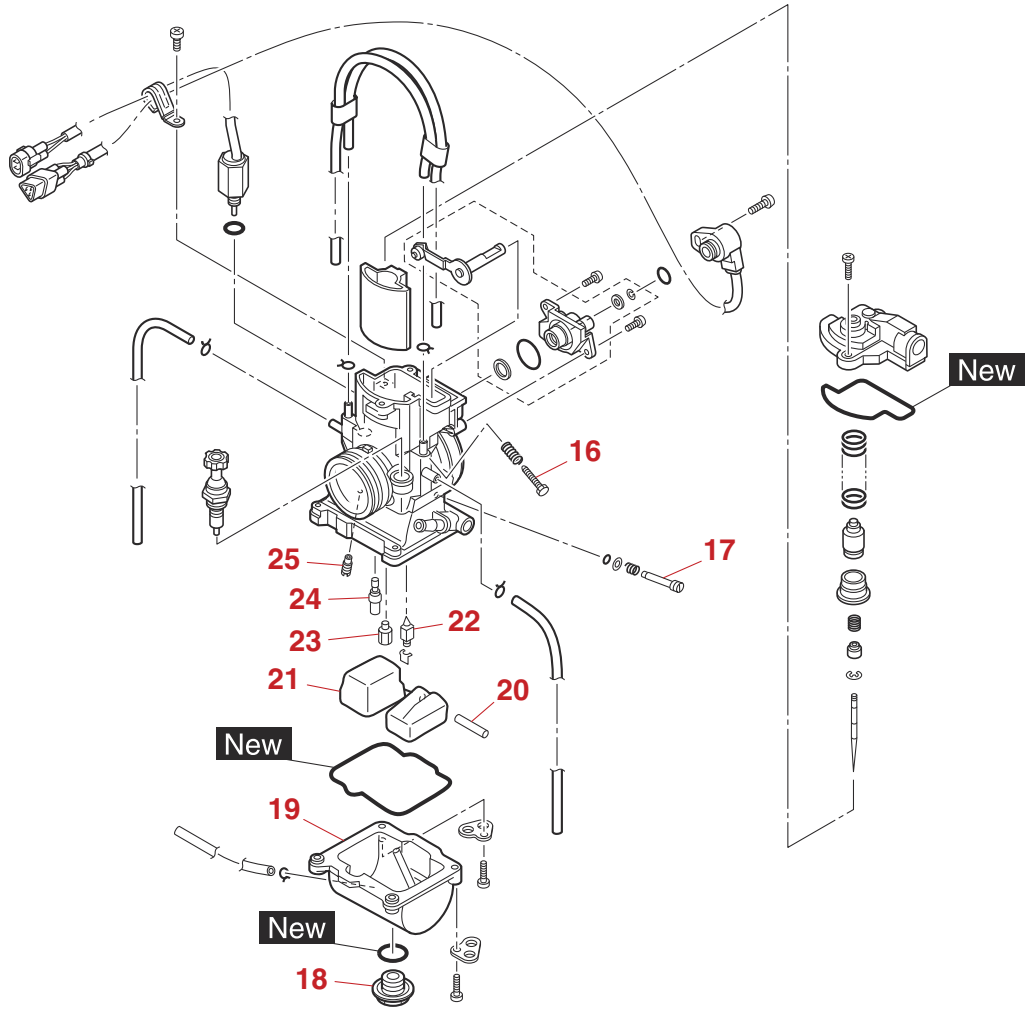

Order	Job/Parts to remove	Q'ty	Remarks
16	Throttle stop screw	1	
17	Pilot air screw	1	
18	Plug	1	
19	Float chamber	1	
20	Float pin	1	
21	Float	1	
22	Needle valve	1	
23	Main jet	1	
24	Pilot jet	1	
25	Power jet	1	

EAM30580

HANDLING NOTE

ECA27120

NOTICE

Do not loosen the screw (throttle position sensor) "1" except when changing the throttle position sensor due to failure because it will cause a drop in engine performance.

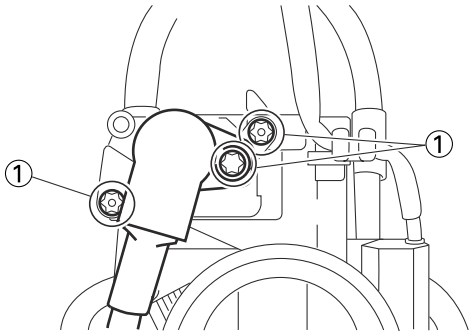

EAM30573

CHECKING THE CARBURETOR

1. Check:
   - Carburetor body
   - Float chamber
   - Jet housing
     Cracks/damage → Replace.
2. Check:
   - Fuel passages
     Obstruction → Clean.
     a. Wash the carburetor in a petroleum-based solvent. Do not use any caustic carburetor cleaning solution.
     b. Blow out all of the passages and jets with compressed air.

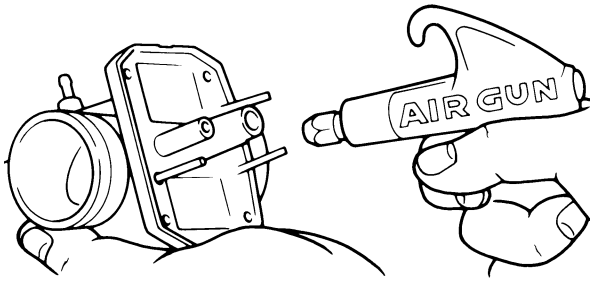

3. Check:
   - Float chamber body
     Dirt → Clean.
4. Check:
   - Float chamber rubber gasket
     Cracks/damage/wear → Replace.
5. Check:
   - Float
     Damage → Replace.

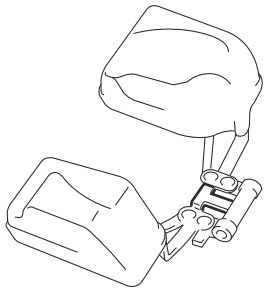

6. Check:
   - Needle valve "1"
   - Needle valve seat "2"
     Damage/wear "a" → Replace.
     Obstruction "b" → Clean.

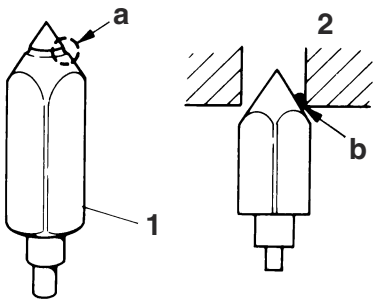

7. Check:
   - Jet needle "1"
   - Main jet "2"
   - Pilot jet "3"
   - Power jet "4"
   - Starter plunger
     Bends/damage/wear → Replace.
     Obstruction → Clean.
     Blow out the jets with compressed air.

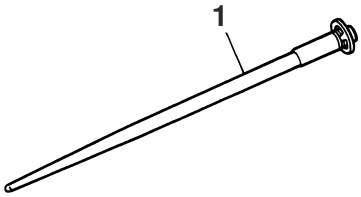

8. Check:
   - Free movement
     Stick → Repair or replace.

TIP

Insert the throttle valve "2" into the carburetor body while pulling up the lever "1", and check for free movement.

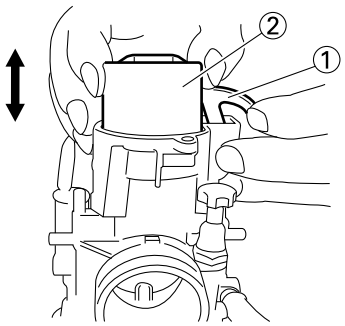

9. Check:
   - Hose joint
     Cracks/damage → Replace.
10. Check:
   - Carburetor breather hose
   - Fuel hose
     Cracks/damage/wear → Replace.
     Obstruction → Clean.
     Blow out the hoses with compressed air.

EAM30574

CHECKING THE REED VALVE

1. Measure:
   - Reed valve bending "a"
     Out of limit → Replace.

	Valve bending limit **0.2 mm (0.01 in)**

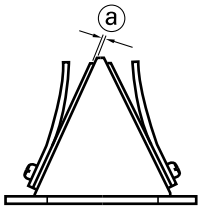

   - Valve stopper height "b"
     Out of specification → Replace.

	Valve stopper height **10.3–10.7 mm (0.41–0.42 in)**

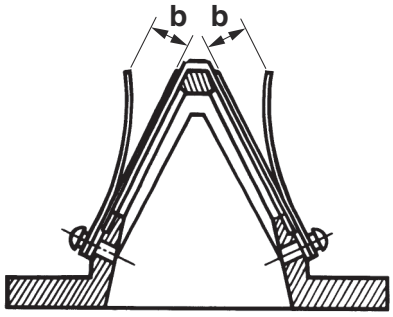

EAM30577

INSTALLING THE REED VALVE

1. Install:
   - Reed valve "1"
   - Reed valve stopper "2"
   - Reed valve screw "3"

	Reed valve screw **1.0 N·m (0.10 kgf·m, 0.73 lb·ft)**

TIP

- Install the reed valve with the reed valve bending as shown.
- Note the cut "a" in the lower corner of the reed valve and stopper.
- Tighten each screw gradually to avoid warping.

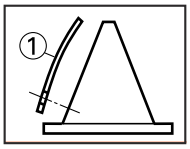

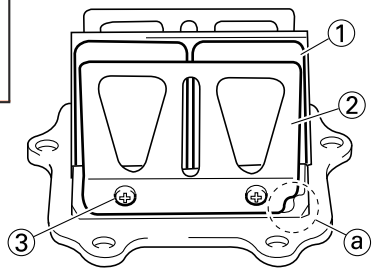

2. Install:
   - Gasket (reed valve) “1” New
   - Reed valve plate “2”
   - Reed valve assembly “3”
   - Reed valve spacer “4”

TIP

Install the reed valve spacer with its chamfered side “a” to the right.

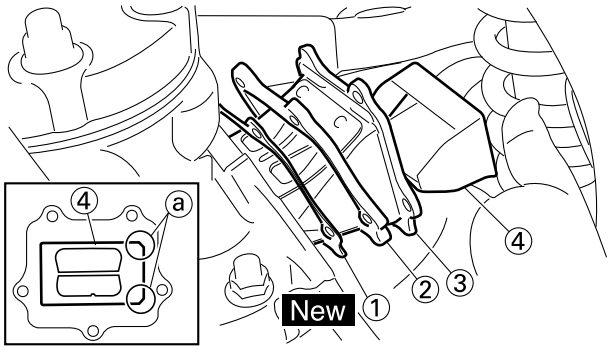

3. Install:
   - Carburetor joint “1”
   - Carburetor joint bolt “2”

	Carburetor joint bolt **10 N·m (1.0 kgf·m, 7.4 lb·ft)**

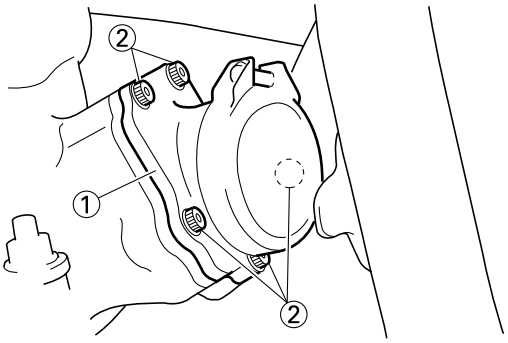

EAM30576

ASSEMBLING THE CARBURETOR

1. Install:
   - Power jet “1”
     (to the carburetor “2”)

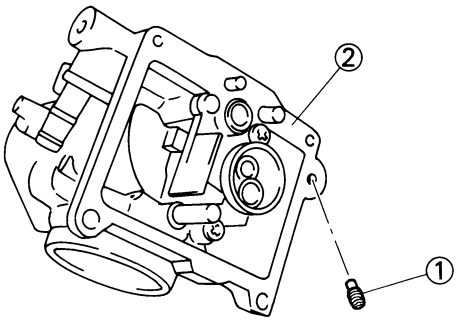

2. Install:
   - O-ring “1”
   - Solenoid valve “2”
     (to the carburetor)

ECA27130

NOTICE

Before installing the solenoid valve, blow air on the solenoid valve and its installing location on the carburetor in order to remove any foreign particles such as chips etc.

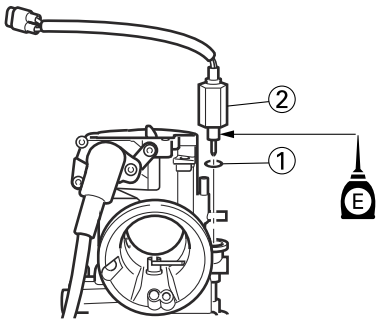

3. Install:
   - Pilot air screw “1”
   - Throttle stop screw “2”
     a. Turn in the pilot air screw until it is lightly seated.
     b. Turn out the pilot air screw by the number of turns recorded before removing.

	Air screw turns out **1-1/4**

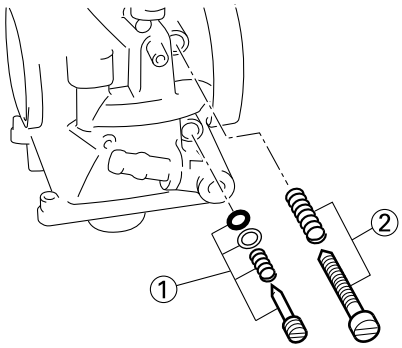

4. Install:
   - Starter plunger “1”

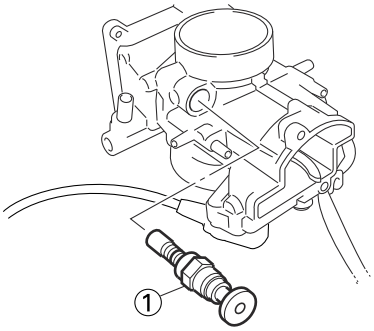

5. Install:
   - Pilot jet “1”
   - Main jet “2”

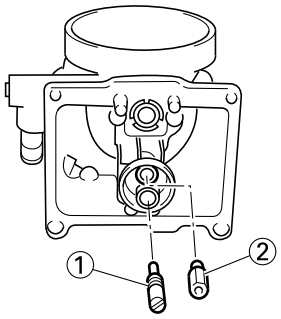

6. Install:
   - Needle valve “1”
   - Float “2”
   - Float pin “3”

TIP
- After installing the needle valve to the float, install them to the carburetor.
- Check the float for smooth movement.

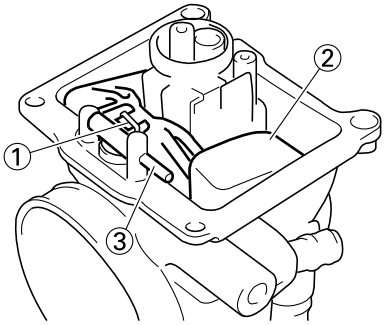

7. Install:
   - Float chamber “1”
   - Plate “2”
   - Screw (float chamber) “3”

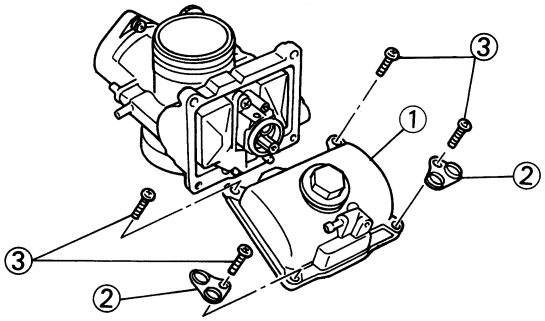

8. Install:
   - Air vent hose [L = 580 mm (22.8 in)] “1”
   - Air vent hose [L = 400 mm (15.7 in)] “2”
   - Overflow hose [L = 280 mm (11.0 in)] “3”
   - Clamp “4”

   Refer to “CABLE ROUTING DIAGRAM” on page 2-15.

TIP
Install the air vent hoses and overflow hose to the carburetor with their ends not having the cuts “a” toward the carburetor.

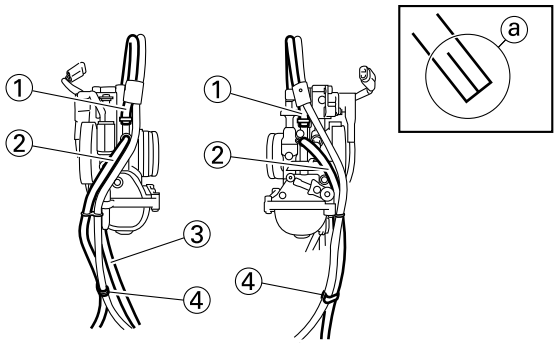

9. Install:
   - Jet needle “1”
   - Collar “2”
   - Spring “3”
   - Jet needle holder “4”
     (to the throttle valve “5”)

TIP
Install the spring with its smaller dia. “a” facing the collar.

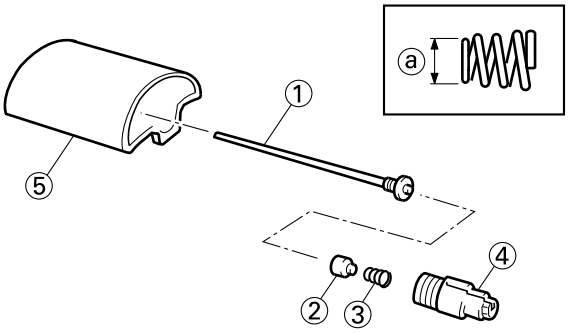

10. Install:
    - Throttle cable “1”
    - Locknut “2”

	Locknut (throttle cable carburetor side) **4.0 N·m (0.40 kgf·m, 3.0 lb·ft)**

- Mixing chamber top “3”
- Spring (throttle valve) “4”
- Ring “5”
- Throttle valve “6”

TIP
- While compressing the spring, connect the throttle cable.
- Align the projection “a” on the ring with the groove “b” in the jet needle holder “7”.

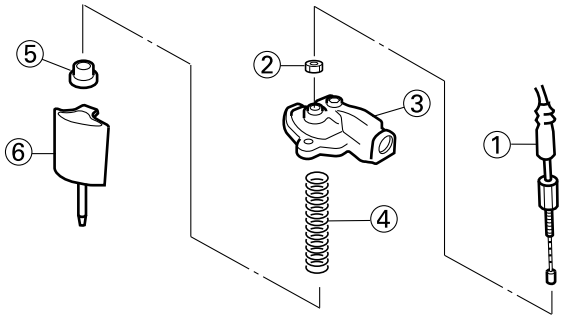

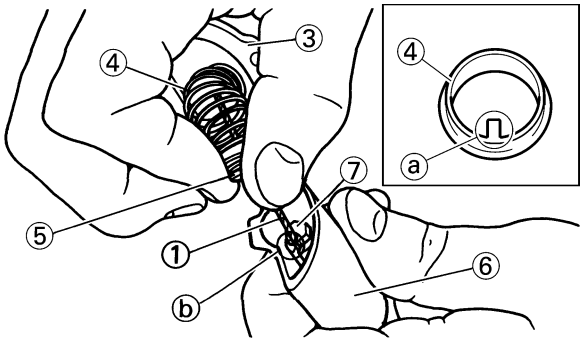

11. Install:
   - Mixing chamber top "1"
   - Screw (mixing chamber top) "2" (to the carburetor "3")

TIP

- Insert the throttle valve into the carburetor body while pulling up the lever "4".
- After installing, check the throttle valve for smooth movement.

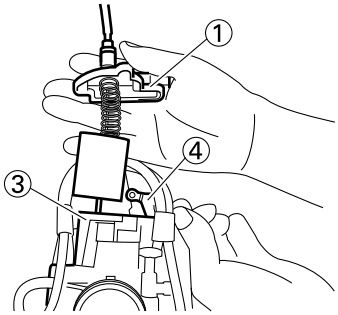

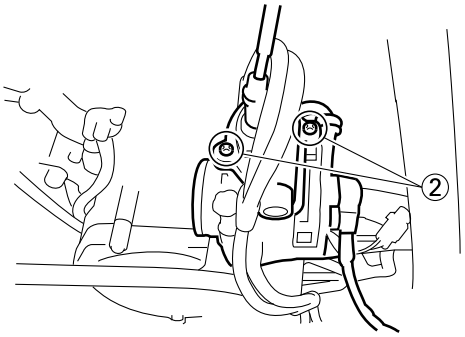

EAM30578

INSTALLING THE CARBURETOR

1. Install:
   - Carburetor "1"

TIP

Install the projection between the carburetor joint slots.

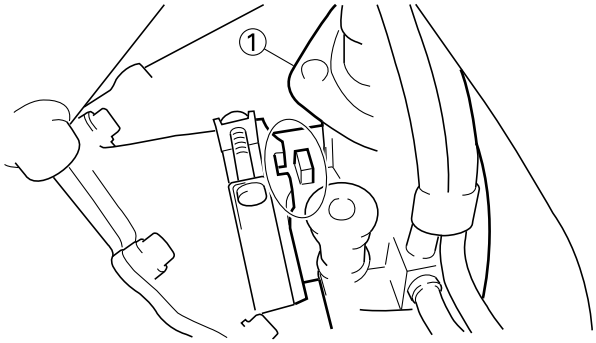

2. Tighten:
   - Screw (carburetor joint) "1"

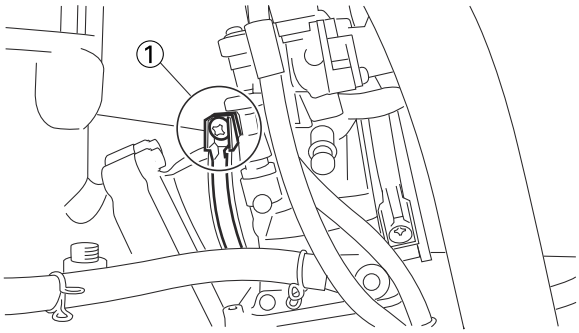

3. Tighten:
   - Screw (air cleaner joint) "1"

TIP

Place the screw head "a" with its top as shown and secure the clamp in alignment with the horizontal line "b" that passes the center of the carburetor.

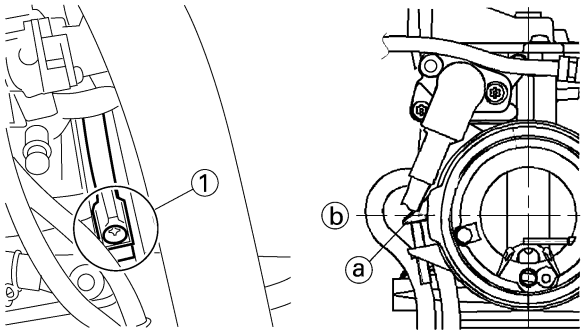

4. Connect:
   - Throttle position sensor lead "1"
   - Solenoid valve lead "2"
     Refer to "CABLE ROUTING DIAGRAM" on page 2-15.

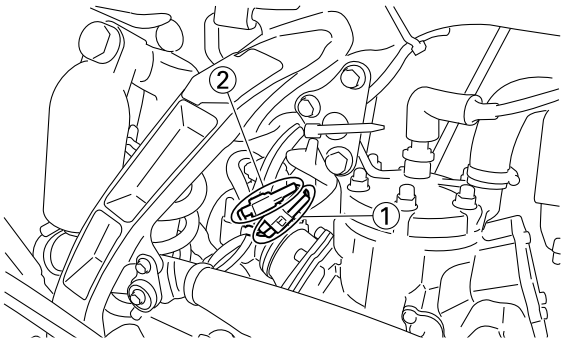

5. Adjust:
   - Idle speed
     Refer to "CHECKING THE ENGINE IDLING SPEED" on page 3-6.

EAM30579

MEASURING AND ADJUSTING THE FUEL LEVEL

1. Measure:
   - Float height "a"
     Out of specification → Adjust.

	Float height **6.5 mm (0.26 in)**

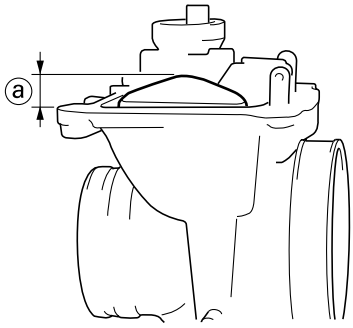

a. Hold the carburetor in an upside down position.
b. Measure the distance between the mating surface of the float chamber and top of the float using a vernier calipers.

TIP

The float arm should be resting on the needle valve, but not compressing the needle valve.

2. Adjust:
   - Fuel level
     a. Check the needle valve seat and needle valve.
     b. If either is worn, replace them as a set.
     c. If both are fine, adjust the float level by slightly bending the float tang "1".

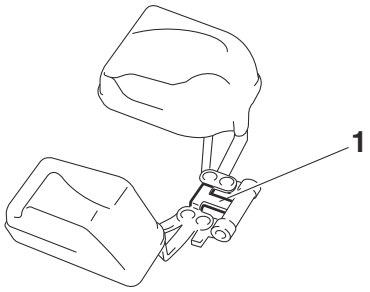

d. Measure the fuel height again.
e. Repeat steps (c) to (d) until the fuel level is within specification.

ELECTRICAL SYSTEM

WIRING DIAGRAM..... 8-1
COLOR CODE..... 8-2

IGNITION SYSTEM..... 8-3
TROUBLESHOOTING..... 8-3

SOLENOID VALVE SYSTEM..... 8-4
TROUBLESHOOTING..... 8-4

THROTTLE POSITION SENSOR SYSTEM..... 8-5
TROUBLESHOOTING..... 8-5

ELECTRICAL COMPONENTS..... 8-7
CHECKING THE SWITCHES..... 8-9
CHECKING THE IGNITION SPARK GAP..... 8-11
CHECKING THE SPARK PLUG CAP..... 8-11
CHECKING THE IGNITION COIL..... 8-11
CHECKING THE PICKUP COIL..... 8-12
CHECKING THE SOURCE COIL..... 8-12
CHECKING THE SOLENOID VALVE OPERATION..... 8-13
CHECKING THE SOLENOID VALVE COIL..... 8-13
HANDLING NOTE..... 8-13
CHECKING THE THROTTLE POSITION SENSOR COIL..... 8-14
CHANGING AND ADJUSTING THE THROTTLE POSITION SENSOR..... 8-14
CHECKING THE THROTTLE POSITION SENSOR INPUT VOLTAGE..... 8-16

EAM20195

WIRING DIAGRAM

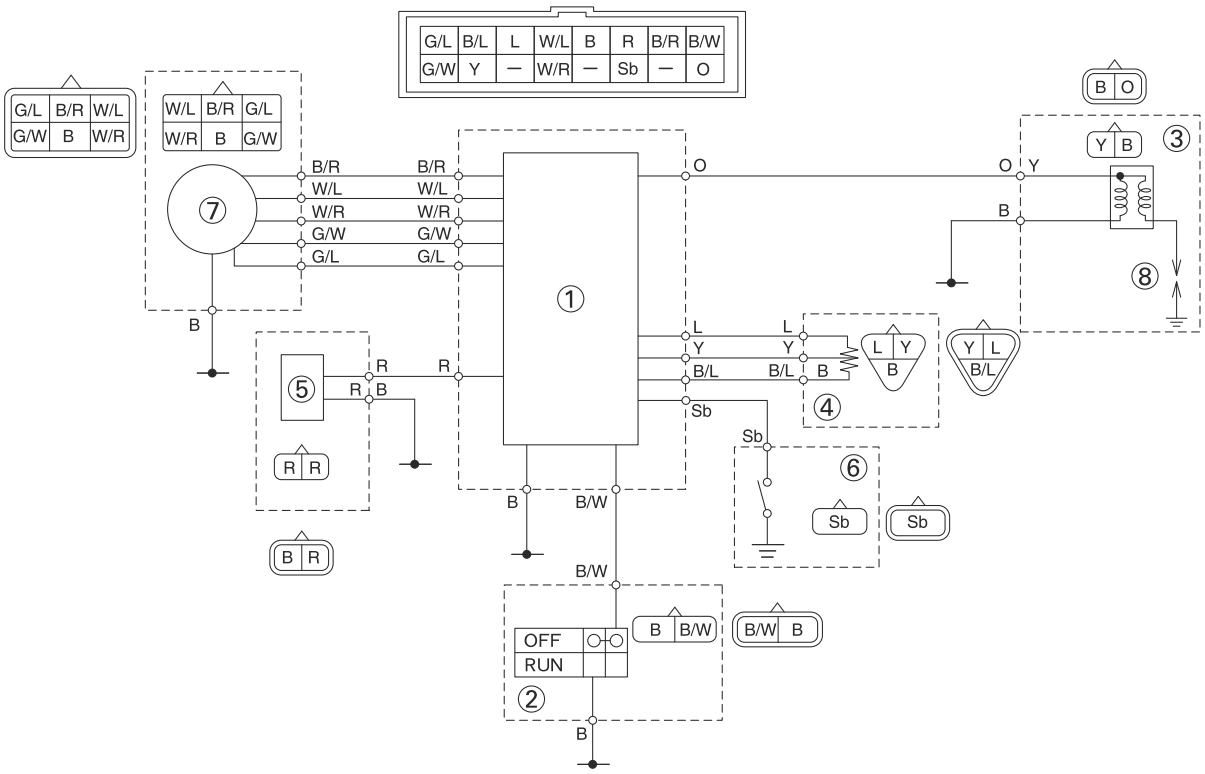

1. CDI unit
2. Engine stop switch
3. Ignition coil
4. Throttle position sensor
5. Solenoid valve
6. Neutral switch
7. CDI magneto
8. Spark plug

EAM30608

COLOR CODE

B	Black
L	Blue
O	Orange
R	Red
Sb	Sky blue
Y	Yellow
B/L	Black/Blue
B/R	Black/Red
B/W	Black/White
G/L	Green/Blue
G/W	Green/White
W/L	White/Blue
W/R	White/Red

EAM20142

IGNITION SYSTEM

EAM30660

TROUBLESHOOTING

The ignition system fails to operate (no spark or intermittent spark).

TIP

Before troubleshooting, remove the following part(s):

1. Seat
2. Fuel tank

1. Check the spark plug. Refer to "CHECKING THE SPARK PLUG" on page 3-6.	NG→	Re-gap or replace the spark plug.
OK↓		
2. Check the ignition spark gap. Refer to "CHECKING THE IGNITION SPARK GAP" on page 8-11.	OK→	Ignition system is OK.
NG↓		
3. Check the spark plug cap. Refer to "CHECKING THE SPARK PLUG CAP" on page 8-11.	NG→	Replace the spark plug cap.
OK↓		
4. Check the ignition coil. Refer to "CHECKING THE IGNITION COIL" on page 8-11.	NG→	Replace the ignition coil.
OK↓		
5. Check the engine stop switch. Refer to "CHECKING THE SWITCHES" on page 8-9.	NG→	Replace the engine stop switch.
OK↓		
6. Check the pickup coil. Refer to "CHECKING THE PICKUP COIL" on page 8-12.	NG→	Replace the pickup coil.
OK↓		
7. Check the source coil. Refer to "CHECKING THE SOURCE COIL" on page 8-12.	NG→	Replace the CDI magneto.
OK↓		
8. Check the entire ignition system wiring. Refer to "WIRING DIAGRAM" on page 8-1.	NG→	Properly connect or replace the wiring harness.
OK↓		
Replace the CDI unit.		

EAM20196

SOLENOID VALVE SYSTEM

EAM30581

TROUBLESHOOTING

If the solenoid valve will not operate, use the following inspection steps.

TIP

Before troubleshooting, remove the following part(s):

1. Seat
2. Fuel tank

Use 12 V battery in this inspection.

1. Check each couplers and wire connection.	NG→	Reconnect.
OK↓		
2. Check solenoid valve. (Check solenoid valve operation. Solenoid valve coil) Refer to “CHECKING THE SOLENOID VALVE OPERATION” on page 8-13 and “CHECKING THE SOLENOID VALVE COIL” on page 8-13.	NG→	Replace the solenoid valve.
OK↓		
3. Check CDI magneto. (Source coil) Refer to “CHECKING THE SOURCE COIL” on page 8-12.	NG→	Replace the source coil.
OK↓		
Replace the CDI unit.		

EAM20197

THROTTLE POSITION SENSOR SYSTEM

EAM30582

TROUBLESHOOTING

If the throttle position sensor will not operate, use the following inspection steps.

TIP

Before troubleshooting, remove the following part(s):

1. Seat
2. Fuel tank

1. Check entire ignition system for connection.	NG→	Reconnect.
OK↓		
2. Check throttle position sensor. (Throttle position sensor coil) Refer to “CHECKING THE THROTTLE POSITION SENSOR COIL” on page 8-14 and “CHANGING AND ADJUSTING THE THROTTLE POSITION SENSOR” on page 8-14.	NG→	Replace the throttle position sensor.
OK↓		
3. Check CDI magneto. (Source coil) Refer to “CHECKING THE SOURCE COIL” on page 8-12.	NG→	Replace the source coil.
OK↓		
4. Check CDI unit. (Throttle position sensor input voltage) Refer to “CHECKING THE THROTTLE POSITION SENSOR INPUT VOLTAGE” on page 8-16.	NG→	Replace the CDI unit.

EAM20147

ELECTRICAL COMPONENTS

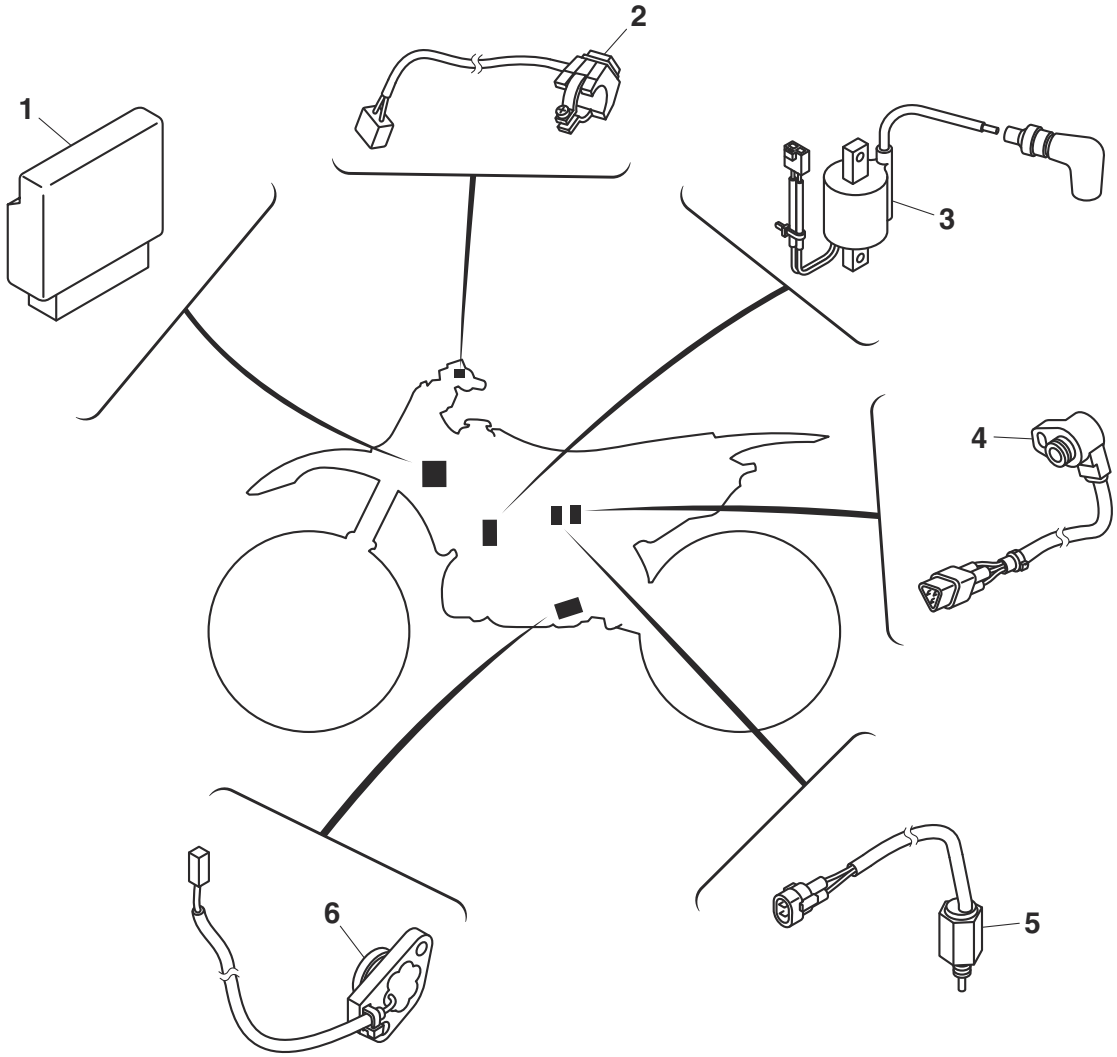

1. CDI unit
2. Engine stop switch
3. Ignition coil
4. Throttle position sensor
5. Solenoid valve
6. Neutral switch

EAM30289

CHECKING THE SWITCHES

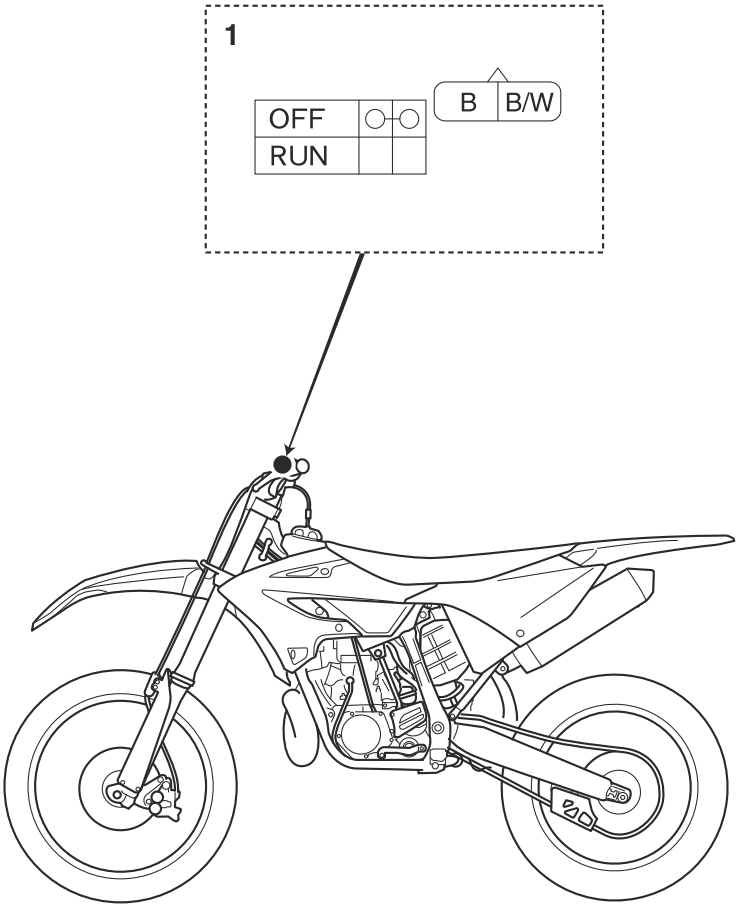

1. Engine stop switch

Check each switch for continuity with the digital circuit tester. If the continuity reading is incorrect, check the wiring connections and if necessary, replace the switch.

ECA14371

NOTICE

Never insert the tester probes into the coupler terminal slots. Always insert the probes from the opposite end "a" of the coupler, taking care not to loosen or damage the leads.

Digital circuit tester (CD732)
90890-03243
Model 88 Multimeter with tachometer
YU-A1927

TIP

When checking for continuity, switch back and forth between the switch positions a few times.

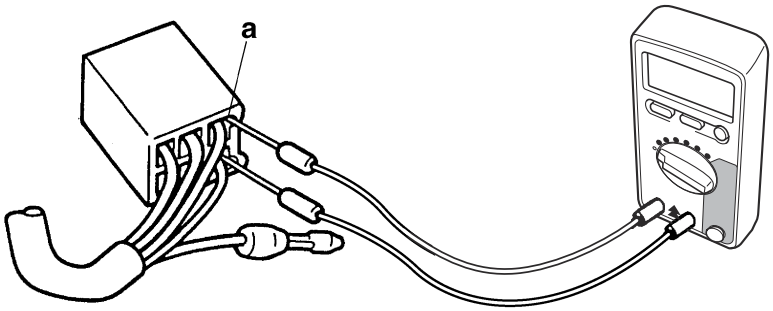

Terminal connections of the switch are shown in the terminal connection diagram below.
The switch positions “a” are shown in the far left column and the switch lead colors are shown in the top row in the switch illustration.

TIP

“ ○——○ ” indicates continuity between switch terminals (i.e., a closed circuit at each switch position).

The example illustration below shows that:
There is continuity between red and brown when the switch is “ON”.

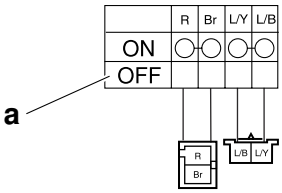

EAM30294

CHECKING THE IGNITION SPARK GAP

1. Check:
   - Ignition spark gap
     Out of specification → Perform the ignition system troubleshooting, starting with step (3).
     Refer to "TROUBLESHOOTING" on page 8-3.

	Minimum ignition spark gap **6.0 mm (0.24 in)**

TIP

If the ignition spark gap is within specification, the ignition system circuit is operating normally.

a. Disconnect the spark plug cap from the spark plug.
b. Connect the ignition checker "1" as shown.

	Ignition checker **90890-06754** **Oppama pet–4000 spark checker** **YM-34487**

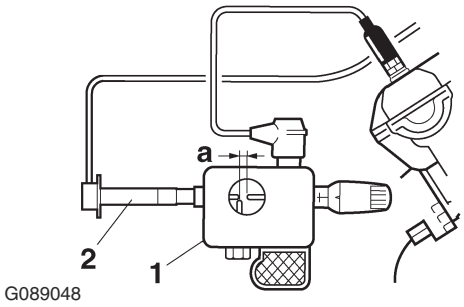

2. Spark plug cap

c. Kick the kickstarter crank.
d. Measure the ignition spark gap "a".
e. Crank the engine and gradually increase the spark gap until a misfire occurs.

EAM30295

CHECKING THE SPARK PLUG CAP

1. Remove:
   - Spark plug cap
     (from the high tension cord)
2. Check:
   - Spark plug cap resistance
     Out of specification → Replace.

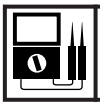	**Resistance** **5.00 kΩ**

a. Connect the digital circuit tester (Ω) to the spark plug cap.

	Digital circuit tester (CD732) **90890-03243** **Model 88 Multimeter with tachometer** **YU-A1927**

- Positive tester probe →
  High tension cord terminal "1"
- Negative tester probe →
  High tension cord terminal "2"

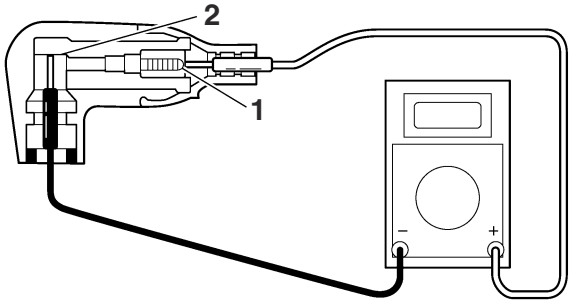

b. Measure the spark plug cap resistance.

EAM30296

CHECKING THE IGNITION COIL

1. Check:
   - Primary coil
     a. Disconnect the ignition coil connectors from the ignition coil terminals.
     b. Connect the digital circuit tester (Ω) to the ignition coil as shown.

	Digital circuit tester (CD732) **90890-03243** **Model 88 Multimeter with tachometer** **YU-A1927**

- Positive tester probe →
  Yellow "1"
- Negative tester probe →
  Black "2"

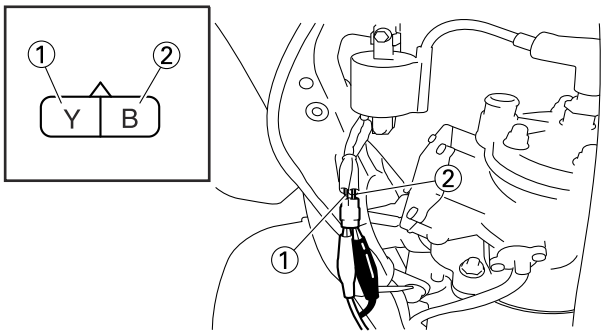

c. Check the primary coil continuity.
d. If there is no continuity, replace the

ignition coil.

2. Check:
   - Secondary coil resistance
     Out of specification → Replace.

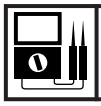

Secondary coil resistance
9.52–14.28 kΩ

a. Connect the digital circuit tester (Ω) to the ignition coil as shown.

Digital circuit tester (CD732)
90890-03243
Model 88 Multimeter with tachometer
YU-A1927

- Positive tester probe →
  High tension cord "1"
- Negative tester probe →
  Yellow "2"

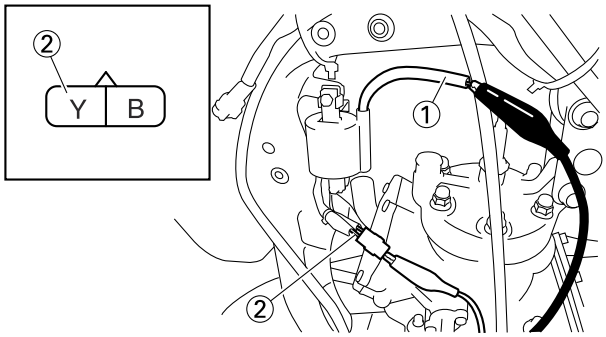

b. Measure the secondary coil resistance.

EAM30583

CHECKING THE PICKUP COIL

1. Disconnect:
   - Pickup coil coupler
     (from the wire harness)
2. Check:
   - Pickup coil resistance
     Out of specification → Replace.

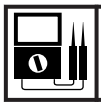

Pickup coil resistance
248.0–372.0 Ω

a. Connect the digital circuit tester (Ω) to the pickup coil coupler as shown.

Digital circuit tester (CD732)
90890-03243
Model 88 Multimeter with tachometer
YU-A1927

- Positive tester probe →
  White/Red "1"
- Negative tester probe →
  White/Blue "2"

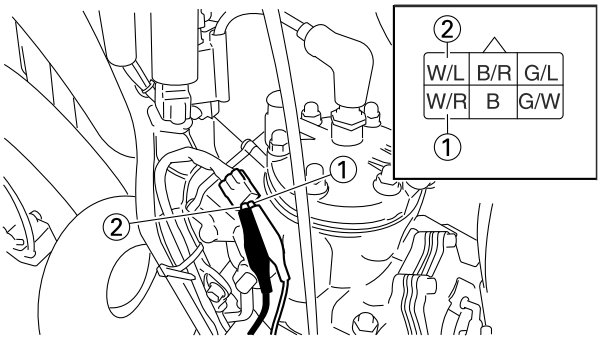

b. Measure the pickup coil resistance.

EAM30584

CHECKING THE SOURCE COIL

1. Disconnect:
   - CDI magneto coupler
     (from the wire harness)
2. Check:
   - Charging coil 1 resistance
     (B/R–B)
     Out of specification → Replace the CDI magneto.

Charging coil 1 resistance
720.0–1080.0 Ω

a. Connect the digital circuit tester (Ω) to the CDI magneto coupler as shown.

Digital circuit tester (CD732)
90890-03243
Model 88 Multimeter with tachometer
YU-A1927

- Positive tester probe →
  Black/Red "1"
- Negative tester probe →
  Black "2"

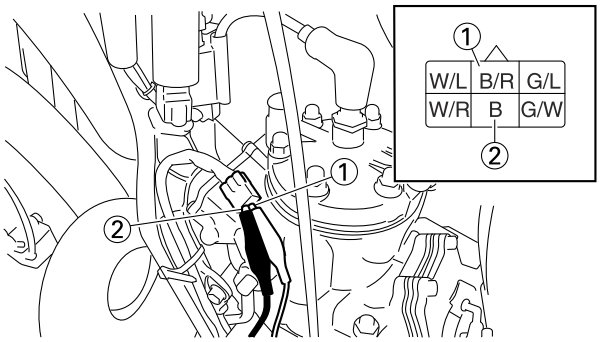

b. Measure the source coil resistance (B/R–

B).

3. Check:
   - Charging coil 2 resistance (G/L–G/W)
     Out of specification → Replace the CDI magneto.

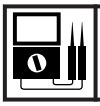	**Charging coil 2 resistance** **44.0–66.0 Ω**

a. Connect the digital circuit tester (Ω) to the CDI magneto coupler as shown.

	Digital circuit tester (CD732) **90890-03243** **Model 88 Multimeter with tachometer** **YU-A1927**

- Positive tester probe → Green/Blue "1"
- Negative tester probe → Green/White "2"

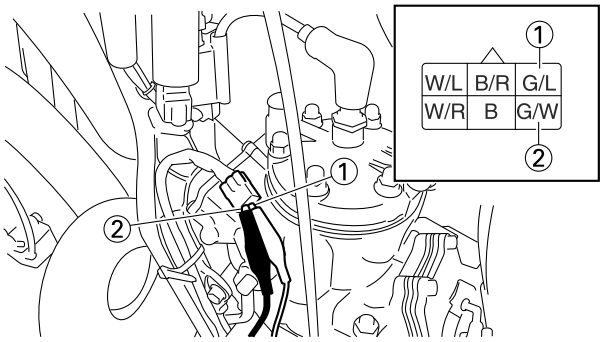

b. Measure the source coil resistance (G/L–G/W).

EAM30585

CHECKING THE SOLENOID VALVE OPERATION

1. Disconnect:
   - Solenoid valve coupler
2. Connect:
   - Battery (12 V)
     (to the solenoid valve coupler)

- Positive battery lead → Red "1"
- Negative battery lead → Red "2"

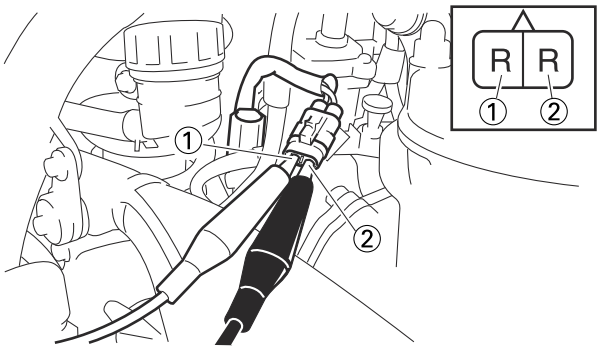

3. Check:
   - Solenoid valve "1"
     No click when connecting the battery → Replace.

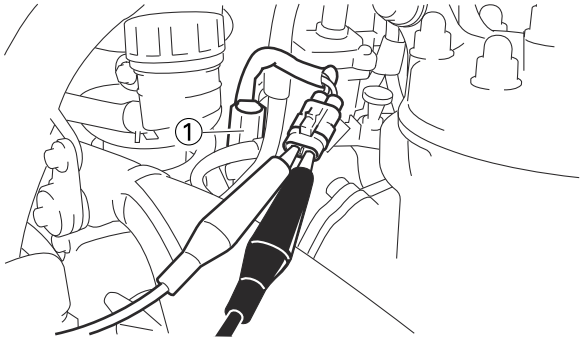

EAM30586

CHECKING THE SOLENOID VALVE COIL

1. Check:
   - Solenoid valve coil resistance
     Out of specification → Replace.

- Positive tester probe → Red "1"
- Negative tester probe → Red "2"

	Solenoid resistance **22.8–27.8 Ω**

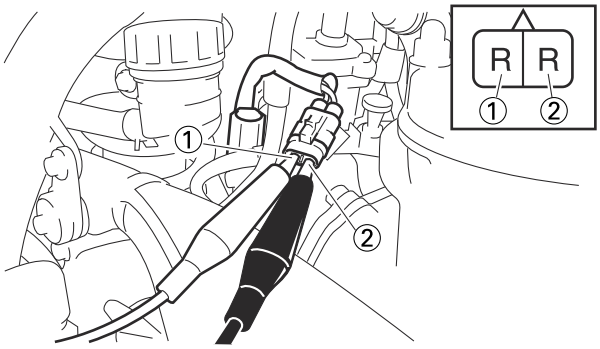

EAM30587

HANDLING NOTE

ECA27120

NOTICE

Do not loosen the screw (throttle position

sensor) "1" except when changing the throttle position sensor due to failure because it will cause a drop in engine performance.

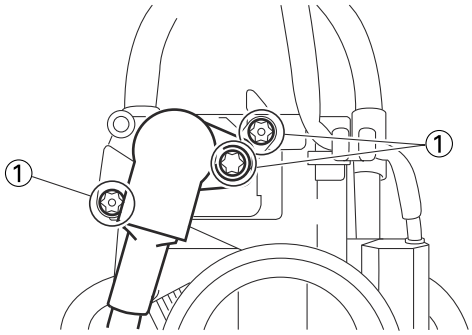

EAM30588

CHECKING THE THROTTLE POSITION SENSOR COIL

1. Remove:
   - Carburetor
   - Mixing chamber top
     Refer to "CARBURETOR" on page 7-3.
2. Check:
   - Throttle position sensor coil resistance
     Out of specification → Replace.

- Positive tester probe →
  Yellow "2"
- Negative tester probe →
  Black "3"

Throttle position sensor coil variable resistance
Full closed
0–2 kΩ
Full opened
4–6 kΩ

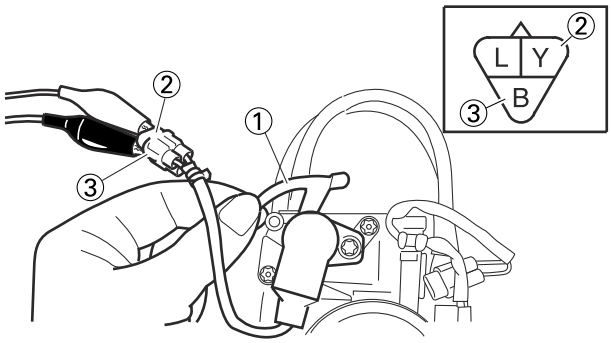

EAM30589

CHANGING AND ADJUSTING THE THROTTLE POSITION SENSOR

1. Remove:
   - Carburetor
   - Mixing chamber top
     Refer to "CARBURETOR" on page 7-3.
2. Remove:
   - Screw (throttle position sensor) "1"
   - Throttle position sensor "2"

TIP

Loosen the screw (throttle position sensor) using the T25 bit.

Throttle position sensor coil resistance
4–6 kΩ

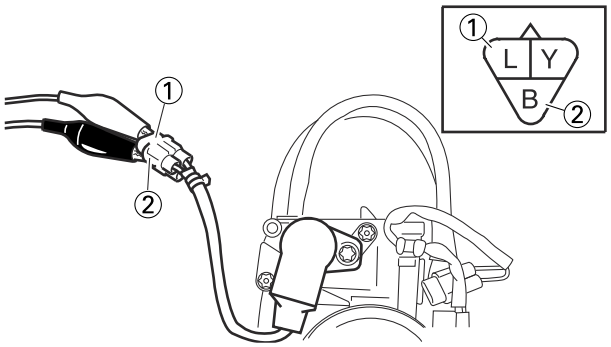

3. Check:
   - Throttle position sensor coil variable resistance
     Check that the resistance in increased as the lever "1" is moved from the full close position to the full open position.
     Out of specification → Replace.

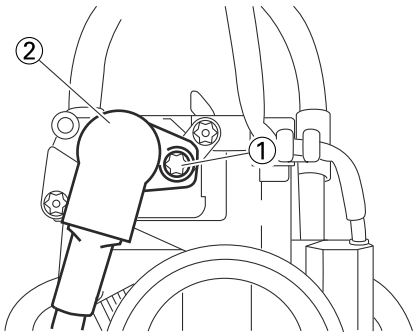

3. Replace:
   - Throttle position sensor
4. Install:
   - Throttle position sensor "1"
   - Screw (throttle position sensor) "2"

TIP

- Align the slot "a" in the throttle position sensor

with the projection “b” on the carburetor while the lever “3” is held down.
- Temporarily tighten the screw (throttle position sensor).

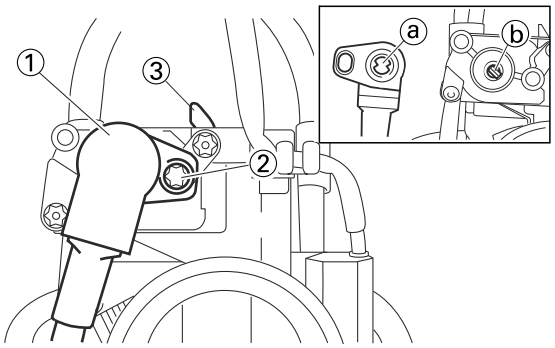

5. Install:
   - Mixing chamber top
   - Carburetor
     Refer to “CARBURETOR” on page 7-3.
6. Adjust:
   - Standard adjustment of engine idling speed for throttle position sensor
     a. Set the digital tachometer to the high tension cord.
     b. Turn the throttle stop screw “1” until the specified idle speed.
     Refer to “CHECKING THE ENGINE IDLING SPEED” on page 3-6.

	Standard adjustment of engine idling speed **1700–1900 r/min**

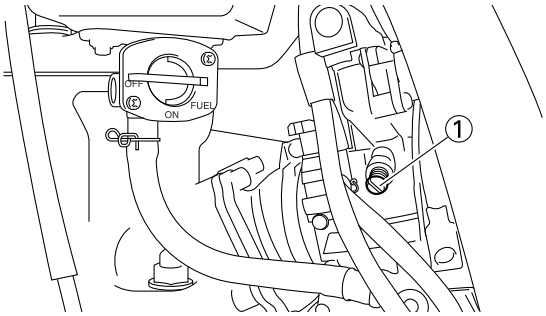

7. Insert the thin electric conductors “2” (lead wire) into the throttle position sensor coupler “1”, as shown, and connect the tester to them.

• Positive tester probe → Yellow “3” • Negative tester probe → Black “4”

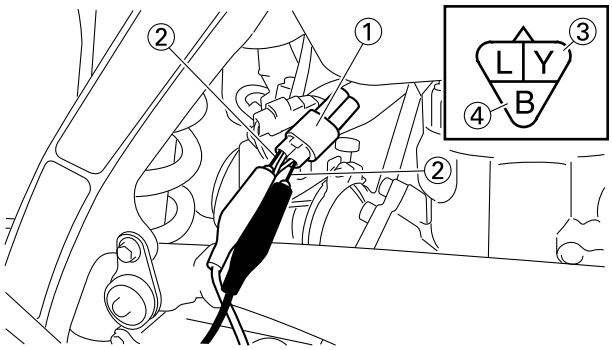

8. Start the engine.
9. Adjust:
   - Throttle position sensor output voltage
     a. Adjust the installation angle of the throttle position sensor “1” to obtain the specified output voltage.

	Throttle position sensor output voltage **0.4–0.6 V**

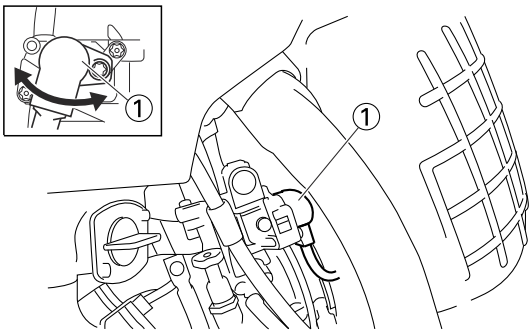

10. Put the aligning marks “a” on the throttle position sensor and carburetor.

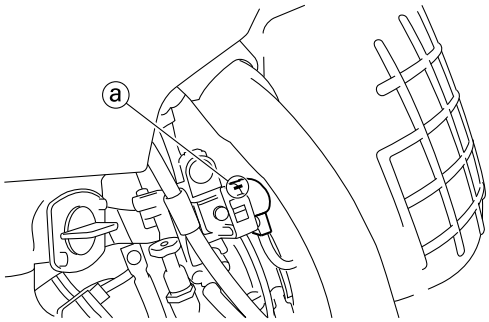

11. Stop the engine.
12. Remove:
    - Carburetor
      Refer to “CARBURETOR” on page 7-3.
13. Tighten:
    - Screw (throttle position sensor) “1”

TIP

Tighten the screws (throttle position sensor) using the T20 bit (tamper resistant fastener type) by aligning the marks “a” that were put before

removal.

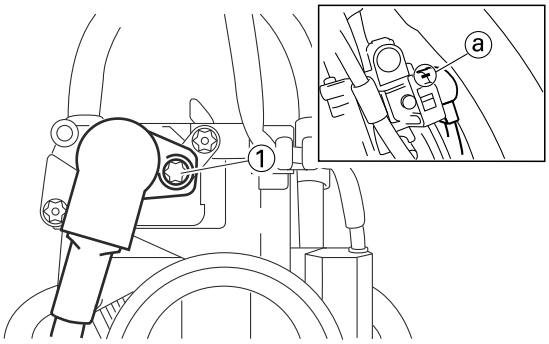

14. Install:
   - Carburetor
     Refer to “CARBURETOR” on page 7-3.

EAM30305

CHECKING THE THROTTLE POSITION SENSOR INPUT VOLTAGE

1. Disconnect:
   - Throttle position sensor coupler
2. Start the engine.
3. Check:
   - Throttle position sensor input voltage
     Out of specification → Replace the CDI unit.

- Positive tester probe →
  Blue “1”
- Negative tester probe →
  Black/Blue “2”

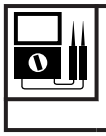

Throttle position sensor input voltage
4–6 V

TROUBLESHOOTING

TROUBLESHOOTING..... 9-1
GENERAL INFORMATION.....9-1
TROUBLESHOOTING OF ENGINE..... 9-1
TROUBLESHOOTING OF CLUTCH..... 9-6
TROUBLESHOOTING OF TRANSMISSION.....9-7
TROUBLESHOOTING OF COOLING SYSTEM.....9-8
TROUBLESHOOTING OF BRAKE.....9-9
TROUBLESHOOTING OF SUSPENSION..... 9-9
TROUBLESHOOTING OF STEERING/HANDLING..... 9-11

EAM20148

TROUBLESHOOTING

EAM30309

GENERAL INFORMATION

TIP

Troubleshooting information provided here does not cover all the trouble symptoms, possible causes, and remedial actions. Some items may not apply depending on the model. Use this information as a guide and quick reference matrix when performing basic troubleshooting. Refer to the each chapter for detailed information on checking, adjustment, and replacement.

EAM30612

TROUBLESHOOTING OF ENGINE

Engine will not start or is difficult to start, but it cranks.

Symptom	Possible cause	Actions
Spark plug does not produce a spark	Refer to “TROUBLESHOOTING” under “IGNITION SYSTEM” on page 8-3.	
Fuel not supplied	Empty fuel tank	Fill the fuel tank with fuel.
	Clogged fuel tank cap breather hole	Clean the fuel tank cap.
	Clogged or damaged fuel hose	Clean, repair, or replace the fuel hose.
	Fuel leakage	Check the fuel passage. Repair or replace as necessary.
	Clogged fuel cock strainer	Clean or replace the fuel cock strainer.
	Clogged fuel cock	Clean or replace the fuel cock.
	Cracked, damaged or worn fuel cock	Replace the fuel cock.
	Clogged carburetor fuel passage	Clean the carburetor.
	Clogged needle valve or needle valve seat	Clean the needle valve or needle valve seat.
	Damaged float	Replace the float.
	Clogged pilot jet	Clean the pilot jet.
	Clogged starter jet	Clean the starter jet.
	Bent or damaged starter plunger	Replace the starter plunger.
	Incorrectly adjusted starter cable	Adjust the starter cable.
—	Water or foreign material in fuel, degraded fuel	Change fuel.

Symptom	Possible cause	Actions
Compression pressure is low	—	Measure the compression pressure.
	Loose spark plug	Tighten the spark plugs to the specified torque.
	Loose cylinder head or cylinder	Tighten bolts or nuts on cylinder head and cylinder to the specified torque.
	Damaged cylinder head gasket	Replace the cylinder head gasket.
	Worn, damaged, or stuck piston ring	Replace the piston and piston rings as a set.
	Seized or damaged piston	Replace the piston and piston rings as a set.
	Worn or damaged cylinder bore	Replace the cylinder, piston, and piston rings as a set.

Incorrect idling speed or mid-to-high speed

Symptom	Possible cause	Actions
Spark plug does not produce a spark	Incorrect spark plug gap	Adjust the spark plug gap.
	Worn or damaged spark plug	Replace the spark plug.
	Defective spark plug cap	Replace the spark plug cap.
	Defective ignition coil	Replace the ignition coil.
	CDI unit failure	Replace the CDI unit.
Fuel not supplied	Fuel leakage	Check the fuel passage. Repair or replace as necessary.
	Clogged carburetor fuel passage	Clean the carburetor.
	Clogged needle valve or needle valve seat	Clean the needle valve or needle valve seat.
	Damaged float	Replace the float.
—	Water or foreign material in fuel, degraded fuel	Change fuel.
	Clogged carburetor air passage	Clean the carburetor.
	Incorrectly adjusted throttle cable	Adjust the throttle grip free play.
	Incorrectly adjusted idling speed (throttle stop screw)	Adjust the throttle stop screw.
	Incorrectly adjusted pilot screw	Adjust the pilot screw.
	Incorrectly adjusted pilot air screw	Adjust the pilot air screw.
	Clogged pilot jet	Clean the pilot jet.
	Loose pilot jet	Tighten the pilot jet to the specified torque.
	Damaged or worn needle valve seat	Replace the needle valve seat.
	Loose needle valve seat	Tighten the needle valve seat to the specified torque.

Symptom	Possible cause	Actions
—	Damaged or worn needle valve	Replace the needle valve.
	Incorrect fuel level	Adjust the fuel level to the proper level.
	Bent, worn, or damaged starter plunger	Replace the starter plunger.
	Incorrectly adjusted starter cable	Adjust the starter cable.
	Clogged or damaged carburetor breather hose	Clean, repair, or replace the carburetor breather hose.
	Incorrect throttle position sensor angle	Adjust the throttle position sensor angle.
	Failed air induction system	Check the air induction system. Repair or replace faulty parts.
	Clogged vacuum hose	Clean the vacuum hose.
	Cracks and damage in vacuum hose	Replace the vacuum hose.
	Damaged carburetor joint	Replace the carburetor joint.
	Loose carburetor joint	Tighten the carburetor joint bolts to the specified torque.
	Clogged air filter element	Clean or replace the air filter element.

Incorrect mid-high speed

Symptom	Possible cause	Actions
Spark plug does not produce a spark	Incorrect spark plug gap	Adjust the spark plug gap.
	Worn or damaged spark plug	Replace the spark plug.
	Defective spark plug cap	Replace the spark plug cap.
	Defective ignition coil	Replace the ignition coil.
	CDI unit failure	Replace the CDI unit.
Fuel not supplied	Fuel leakage	Check the fuel passage. Repair or replace as necessary.
	Clogged carburetor fuel passage	Clean the carburetor.
	Clogged needle valve or needle valve seat	Clean the needle valve or needle valve seat.
	Damaged float	Replace the float.

Symptom	Possible cause	Actions
—	Water or foreign material in fuel, degraded fuel	Change fuel.
	Clogged carburetor air passage	Clean the carburetor.
	Incorrectly adjusted throttle cable	Adjust the throttle grip free play.
	Improperly synchronized carburetors	Adjust synchronization of carburetors.
	Incorrectly adjusted pilot screw	Adjust the pilot screw.
	Incorrectly adjusted pilot air screw	Adjust the pilot air screw.
	Clogged pilot jet	Clean the pilot jet.
	Loose pilot jet	Tighten the pilot jet to the specified torque.
	Clogged main nozzle	Clean the main nozzle.
	Loose main nozzle	Tighten the main nozzle to the specified torque.
	Clogged main jet	Clean the main jet.
	Loose main jet	Tighten the main jet to the specified torque.
	Bent, damaged, or worn jet needle	Replace the jet needle.
	Cracks or damage in the piston valve diaphragm	Replace the piston valve diaphragm.
	Problem with piston valve movement (movement is not smooth)	Replace the piston valve.
	Damaged or worn needle valve seat	Replace the needle valve seat.
	Loose needle valve seat	Tighten the needle valve seat to the specified torque.
	Damaged or worn needle valve	Replace the needle valve.
	Incorrect fuel level	Adjust the fuel level to the proper level.
	Bent, worn, or damaged starter plunger	Replace the starter plunger.
	Incorrectly adjusted starter cable	Adjust the starter cable.
	Clogged or damaged carburetor breather hose	Clean, repair, or replace the carburetor breather hose.
	Incorrect throttle position sensor angle	Adjust the throttle position sensor angle.

Symptom	Possible cause	Actions
—	Failed air induction system	Check the air induction system. Repair or replace faulty parts.
	Clogged vacuum hose	Clean the vacuum hose.
	Cracks and damage in vacuum hose	Replace the vacuum hose.
	Damaged carburetor joint	Replace the carburetor joint.
	Loose carburetor joint	Tighten the carburetor joint bolts to the specified torque.
	Clogged air filter element	Clean or replace the air filter element.

Excessive noise from engine

Symptom	Possible cause	Actions
Noise heard from around piston	Worn or damaged piston ring	Replace the piston and piston rings as a set.
	Worn or damaged piston	Replace the piston and piston rings as a set.
	Worn piston (piston pin hole)	Replace the piston and piston pin as a set.
	Worn or damaged piston pin	Replace the piston pin.
	Worn or damaged cylinder bore	Replace the cylinder, piston, and piston rings as a set.
	Carbon buildup in piston head and combustion chamber	Clean the piston head and combustion chamber.
Noise heard from around crankshaft	Worn or damaged crankshaft journal or crank pin	Replace the crankshaft.
	Worn or damaged big end bearing	Replace the big end bearing.
	Worn or damaged crankshaft journal bearing	Replace the crankshaft journal bearing.
	Worn or damaged balancer shaft journal bearing	Replace the balancer shaft journal bearing.

EAM30510

TROUBLESHOOTING OF CLUTCH

Manual clutch

Symptom	Possible cause	Actions
Clutch slippage	Improperly assembled clutch	Reassemble the clutch.
	Improperly adjusted clutch cable	Adjust the clutch lever free play.
	Loose clutch spring	Tighten the clutch spring bolts to the specified torque.
	Fatigued clutch spring	Replace the clutch springs as a set.
	Warped pressure plate	Replace the pressure plate.
	Worn friction plate	Replace the friction plates as a set.
	Warped or worn clutch plate	Replace the clutch plates as a set.
	Incorrect oil level	Adjust the engine oil level to the specified level.
	Incorrect oil viscosity (low)	Change to recommended engine oil.
	Deteriorated oil	Change to recommended engine oil.
Clutch drags	Faulty clutch spring	Replace the clutch springs as a set.
	Warped pressure plate	Replace the pressure plate.
	Swollen friction plate	Replace the friction plates as a set.
	Warped clutch plate	Replace the clutch plates as a set.
	Bent pull rod (outer pull type)	Replace the pull rod.
	Worn pull rod tooth (outer pull type)	Replace the pull rod and pull lever shaft as a set.
	Bent push rod (inner push type)	Replace the push rod.
	Damaged or worn clutch boss	Replace the clutch boss.
	Seized clutch housing bushing	Replace the clutch housing.
	Improperly installed pull lever	Align the match mark on the pull lever before installation.
	Incorrect oil level	Adjust the engine oil level to the specified level.
	Incorrect oil viscosity (high)	Change to recommended engine oil.
	Deteriorated oil	Change to recommended engine oil.

Symptom	Possible cause	Actions
Clutch noise	Damaged or worn primary driven gear	Replace the primary drive gear or crankshaft, and the clutch housing as a set.
	Loose clutch boss nut	Tighten the clutch boss nut to the specified torque.
	Fatigued clutch damper	Replace the clutch housing.
	Worn clutch housing bearing	Replace the clutch housing bearing.
	Worn pressure plate bearing	Replace the pressure plate bearing.

EAM30511

TROUBLESHOOTING OF TRANSMISSION

Symptom	Possible cause	Actions
Difficult or impossible to shift transmission gear	Clutch drags	Refer to “Clutch drags”.
	Improperly adjusted shift rod	Adjust the shift rod installation length.
	Bent shift shaft	Replace the shift shaft.
	Foreign object in a shift drum groove	Remove foreign object from shift drum groove.
	Damaged shift drum	Replace the shift drum.
	Seized shift fork	Replace the shift fork and shift fork guide bar as a set.
	Bent shift fork guide bar	Replace the shift fork guide bar.
	Foreign object between transmission gears	Remove foreign object from transmission gears.
	Seized transmission gear	Replace the seized gear and the axle as a set.
	Improperly assembled transmission	Reassemble the transmission axle assembly.
Jumps out of gear	Incorrect shift pedal position	Adjust the shift pedal position.
	Improperly returned stopper lever	Replace the stopper lever spring.
	Bent or worn shift fork	Replace the shift fork.
	Shift drum incorrect axial play	Replace the shift drum.
	Worn shift drum groove	Replace the shift drum.
	Worn transmission gear dog	Replace the transmission gear.
Transmission noise	Damaged or worn transmission gear	Replace the transmission gear.
	Worn main axle spline	Replace the main axle.
	Worn drive axle spline	Replace the drive axle.
	Worn bearing	Replace the bearing.

EAM30512

TROUBLESHOOTING OF COOLING SYSTEM

Symptom	Possible cause	Actions
Overheating	Carbon buildup in piston head and combustion chamber	Clean the piston head and combustion chamber.
	Clogged engine cooling water passages	Check and clean the engine cooling water passages.
	Damaged or leaking radiator	Replace the radiator.
	Faulty radiator cap	Replace the radiator cap.
	Clogged radiator fin	Clean the radiator fin.
	Bent or damaged radiator fin	Repair the radiator fin or replace the radiator.
	Damaged or faulty water pump	Replace the water pump.
	Damaged hoses or pipes	Replace the hose or pipe.
	Improperly connected hoses or pipes	Connect the hoses and pipes properly.
	Clogged air filter element	Clean or replace the air filter element.
	Brake drags	Check the brake system and repair or replace faulty parts as necessary.
	Incorrect spark plug gap	Adjust to the specified spark plug gap.
	Incorrect spark plug heat range	Replace the spark plug with the one of the specified type.
Noise from water pump	Contact between the water pump housing cover and impeller	Disassemble the water pump and replace faulty parts.
	Worn water pump housing bearing	Replace the water pump housing bearing.

EAM30513

TROUBLESHOOTING OF BRAKE

Symptom	Possible cause	Actions
Poor performance of disc brake	Worn brake pad	Replace the brake pads as a set.
	Worn or deflected brake disc	Replace the brake disc.
	Air in hydraulic brake system	Bleed the hydraulic brake system.
	Brake fluid leakage	Check the hydraulic brake system and repair or replace faulty parts as necessary.
	Incorrect brake fluid level (low)	Add brake fluid to the specified level.
	Stuck brake caliper piston	Replace the caliper piston seal.
	Stuck brake caliper and slide pin	Lubricate the caliper slide pin.
	Loose union bolt	Tighten the union bolt to the specified torque.
	Damaged brake hose and brake pipe	Replace the brake hose and brake pipe.
	Oil or grease on the brake disc or brake pad	Clean the brake disc or brake pad.
	Insufficient lubrication of brake lever or brake pedal pivot	Lubricate the brake lever or brake pedal pivot.

EAM30514

TROUBLESHOOTING OF SUSPENSION

Symptom	Possible cause	Actions
Front fork is hard	Bent or damaged inner tube	Replace the inner tube.
	Bent or damaged outer tube	Replace the outer tube.
	Damaged or worn slide metal	Replace the slide metal.
	Bent or damaged damper rod	Replace the damper rod.
	Bent wheel axle	Replace the wheel axle.
	Incorrect oil viscosity (high)	Change to recommended fork oil.
	Incorrect oil level (high)	Adjust to the specified oil level.
	Improperly adjusted spring preload (hard)	Adjust the spring preload.
	Improperly adjusted rebound damping (hard)	Adjust the rebound damping.
	Improperly adjusted compression damping (hard)	Adjust the compression damping.

Symptom	Possible cause	Actions
Front fork is soft	Fatigued or broken fork spring	Replace the fork spring.
	Incorrect oil viscosity (low)	Change to recommended fork oil.
	Incorrect oil level (low)	Adjust to the specified oil level.
	Improperly adjusted spring preload (soft)	Adjust the spring preload.
	Improperly adjusted rebound damping (soft)	Adjust the rebound damping.
	Improperly adjusted compression damping (soft)	Adjust the compression damping.
Leaking oil from front fork	Bent, damaged, or corroded inner tube	Replace the inner tube.
	Cracked or damaged outer tube	Replace the outer tube.
	Improperly installed oil seal	Replace the oil seal.
	Damaged oil seal lip	Replace the oil seal.
	Incorrect oil level (high)	Adjust to the specified oil level.
	Loose damper rod assembly bolt	Tighten the damper rod assembly bolt to the specified torque.
	Damaged damper rod assembly bolt copper washer	Replace the damper rod assembly bolt copper washer.
	Cracked or damaged cap bolt O-ring	Replace the cap bolt O-ring.
Rear suspension is hard	Bent or damaged rear shock absorber rod	Replace the rear shock absorber.
	Bent swingarm pivot shaft	Replace the swingarm pivot shaft.
	Damaged or worn swingarm bearing or bushing	Replace the swingarm bearing or bushing.
	Damaged or worn relay arm bearing	Replace the relay arm bearing.
	Damaged or worn connecting arm bearing	Replace the connecting arm bearing.
	Improperly adjusted rear shock absorber spring preload (hard)	Adjust the spring preload.
	Improperly adjusted rear shock absorber rebound damping (hard)	Adjust the rebound damping.
	Improperly adjusted rear shock absorber compression damping (hard)	Adjust the compression damping.

Symptom	Possible cause	Actions
Rear suspension is soft	Oil leaking from rear shock absorber	Replace the rear shock absorber.
	Gas leaking from rear shock absorber	Replace the rear shock absorber.
	Fatigued or damaged rear shock absorber spring	Replace the rear shock absorber.
	Improperly adjusted rear shock absorber spring preload (soft)	Adjust the spring preload.
	Improperly adjusted rear shock absorber rebound damping (soft)	Adjust the rebound damping.
	Improperly adjusted rear shock absorber compression damping (soft)	Adjust the compression damping.
Oil leaking from rear shock absorber	Bent, damaged, or corroded rear shock absorber rod	Replace the rear shock absorber.
	Damaged oil seal lip	Replace the rear shock absorber.

EAM30515

TROUBLESHOOTING OF STEERING/HANDLING

Symptom	Possible cause	Actions
Handlebar wobble	Loose steering ring nut	Tighten the steering ring nut to the specified torque.
	Worn bearing or bearing race	Replace the bearing and bearing race as a set.
	Warped front fork	Repair or replace the front fork.
	Bent front wheel axle	Replace the front wheel axle.
	Incorrect tire pressure	Adjust to the specified tire pressure.
	Worn, deformed, or incorrect tire	Replace the tire.
Heavy steering	Steering ring nut is tightened too tight.	Tighten the steering ring nut to the specified torque.
	Bent lower bracket	Replace the lower bracket.
	Broken bearing or bearing race	Replace the bearing and bearing race as a set.
	Incorrect tire pressure	Adjust to the specified tire pressure.
Front wheel vibration	Loose spoke	Tighten the spoke and adjust the runout.
	Damaged or worn wheel bearing	Replace the wheel bearing.
	Worn, deformed, or incorrect tire	Replace the tire.
	Loose wheel axle or wheel axle nut	Tighten the wheel axle or wheel axle nut to the specified torque.
	Loose wheel axle pinch bolt	Tighten the wheel axle pinch bolt to the specified torque.
	Incorrect front fork oil level	Adjust to the specified front fork oil level.

Symptom	Possible cause	Actions
Rear wheel vibration	Loose spoke	Tighten the spoke and adjust the runout.
	Damaged or worn wheel bearing	Replace the wheel bearing.
	Worn, deformed, or incorrect tire	Replace the tire.
	Loose wheel axle nut	Tighten the wheel axle nut to the specified torque.
	Loose swingarm pivot shaft	Tighten the swingarm pivot shaft to the specified torque.
	Bent or damaged swingarm	Replace the swingarm bearing.
	Damaged or worn swingarm bearing or bushing	Replace the swingarm bearing or bushing.

TUNING

ENGINE..... 10-1
CARBURETOR SETTING..... 10-1
ATMOSPHERIC CONDITIONS AND CARBURETOR SETTINGS..... 10-1
TEST RUN..... 10-1
EFFECTS OF THE SETTING PARTS ON THE THROTTLE VALVE OPENING..... 10-2
MAIN JET ADJUSTMENT..... 10-2
ADJUSTING THE POWER JET..... 10-2
PILOT AIR SCREW ADJUSTMENT..... 10-2
PILOT JET ADJUSTMENT..... 10-3
JET NEEDLE ADJUSTMENT..... 10-3
JET NEEDLE GROOVE POSITION ADJUSTMENT..... 10-4
RELATIONSHIP WITH THROTTLE OPENING..... 10-4
CARBURETOR SETTING PARTS..... 10-4
ROAD CONDITION AND EXAMPLES OF CARBURETOR SETTING..... 10-6
EXAMPLES OF CARBURETOR SETTING DEPENDING ON SYMPTOM..... 10-7
CHANGE OF THE HEAT RANGE OF SPARK PLUGS..... 10-9

CHASSIS..... 10-10
SELECTION OF THE SECONDARY REDUCTION RATIO (SPROCKET)..... 10-10
DRIVE AND REAR WHEEL SPROCKETS SETTING PARTS..... 10-10
TIRE PRESSURE..... 10-10
FRONT FORK SETTING..... 10-11
CHANGE IN AMOUNT AND CHARACTERISTICS OF FORK OIL..... 10-11
SETTING OF SPRING AFTER REPLACEMENT..... 10-11
FRONT FORK SETTING PARTS..... 10-12
REAR SUSPENSION SETTING..... 10-12
CHOOSING SET LENGTH..... 10-12
SETTING OF SPRING AFTER REPLACEMENT..... 10-13
REAR SHOCK ABSORBER SETTING PARTS..... 10-13
SUSPENSION SETTING (FRONT FORK)..... 10-15
SUSPENSION SETTING (REAR SHOCK ABSORBER)..... 10-16

EAM20198
ENGINE

EAM30590
CARBURETOR SETTING

- The role of fuel is to cool the engine, and in the case of a 2-stroke engine, to lubricate the engine in addition to power generation. Accordingly, if a mixture of air and fuel is too lean, abnormal combustion will occur, and engine seizure may result. If the mixture is too rich, spark plugs will get wet with oil, thus making it impossible to bring the engine into full play or if the worst comes to the worst, the engine may stall.
- The richness of the air-fuel mixture required for the engine will vary with atmospheric conditions of the day and therefore, the settings of the carburetor must be properly suited to the atmospheric conditions (air pressure, humidity and temperature).
- Finally, the rider himself must make a test run and check his vehicle for conditions (pick-up of engine speed, road surface conditions) and for the discoloration of the spark plug(s).
  After taking these into consideration, he must select the best possible carburetor settings.

TIP

It is advisable to make a note of settings, atmospheric conditions, road surface condition, laptime, etc. so that the memorandum can be used as a reference useful for future.

EAM30591
ATMOSPHERIC CONDITIONS AND CARBURETOR SETTINGS

Air temp.	Humidity	Air pressure (altitude)	Mixture	Setting
High	High	Low (high)	Richer	Leaner
Low	Low	High (low)	Leaner	Richer

The air density (i.e., concentration of oxygen in the air) determines the richness or leanness of the air/fuel mixture. Therefore, refer to the above table for mixture settings.
That is:

- Higher temperature expands the air with its resultant reduced density.
- Higher humidity reduces the amount of oxygen in the air by so much of the water vapor in the same air.
- Lower atmospheric pressure (at a high altitude) reduces the density of the air.

EAM30592
TEST RUN

After warming up the engine equipped with the standard type carburetor(s) and spark plug(s), run two or three laps of the circuit and check the smooth operation of the engine and discoloration of spark plug(s).

Discoloration	Condition of spark plug
Normal	Insulator is dry and burnt brown.
Over burned (too lean)	Insulator is whitish.
Oil fouled (too rich)	Insulator is sooty and wet.

A. Normal
B. Over burned (too lean)
C. Oil fouled (too rich)

EAM30593

EFFECTS OF THE SETTING PARTS ON THE THROTTLE VALVE OPENING

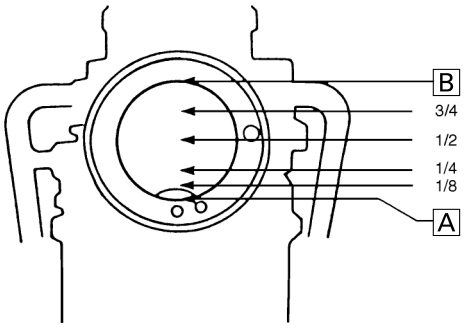

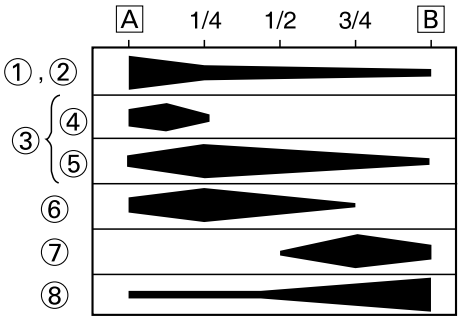

A. Closed
B. Full-open

1. Pilot jet
2. Pilot air screw
3. Jet needle
4. Diameter of straight portion
5. Clip position
6. Throttle valve
7. Power jet
8. Main jet

TIP

The power jet closes at 8500 r/min of the engine, after which only the main jet dominates.

EAM30594

MAIN JET ADJUSTMENT

The richness of air-fuel mixture with 3/4–4/4 throttle can be set by changing the main jet “1”.

Standard main jet	#178

1. Spark plug is too hot.
   Select a main jet having higher calibrating No. than standard. (To be enriched)
2. Spark plug is wet.
   Select a main jet having lower calibrating No. than standard. (To be leaned out)

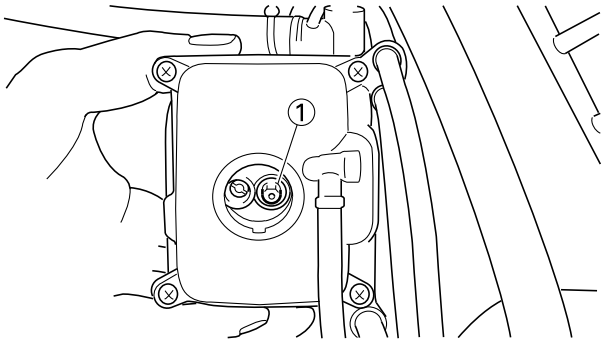

EAM30604

ADJUSTING THE POWER JET

The richness of air-fuel mixture under 8500 r/min to the extent of 1/2 to full opened throttle can be set by changing the power jet “1”. A larger size jet results in a richer mixture, and a smaller size in a leaner mixture.

Standard power jet	#50

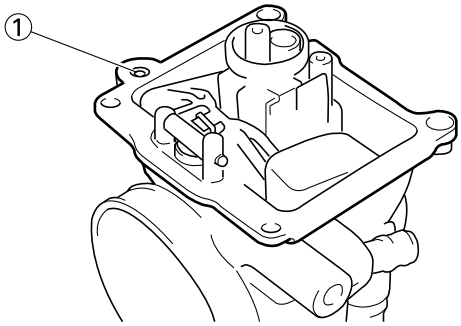

EAM30595

PILOT AIR SCREW ADJUSTMENT

The richness of the air-fuel mixture with the throttle fully closed to 1/8 open can be set by turning the pilot air screw “1”.
Turning in the pilot air screw will make the mixture enrich at low speeds, and turning it out will lean it.

Standard pilot air screw position	1-1/4 turns out

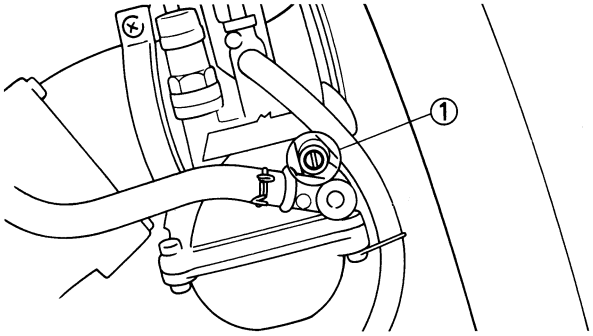

EAM30596

PILOT JET ADJUSTMENT

The richness of air-fuel mixture with the throttle fully closed to 1/2 open can be set by turning the pilot jet "1". It is changed when adjustment cannot be made by the pilot air screw alone.
A larger size jet results in a richer mixture at low speeds, and a smaller size in a leaner mixture.

Standard pilot jet	#50

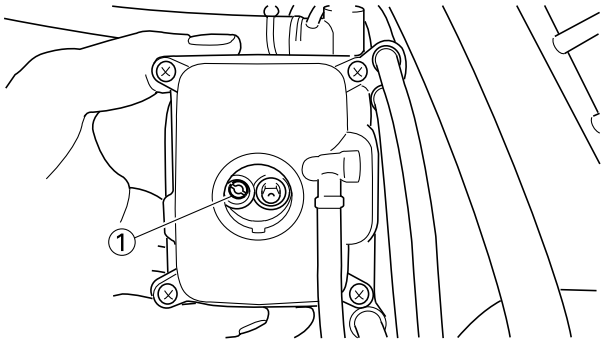

EAM30597

JET NEEDLE ADJUSTMENT

On the carburetors used in the YZ250, the main nozzle is press-fitted, so it can not be replaced. Therefore, carburetor setting requires the change of the jet needle.

1. The jet needle setting parts, having the same taper angle, are available in different straight portion diameters and in different taper starting positions.

Standard jet needle	N3EW

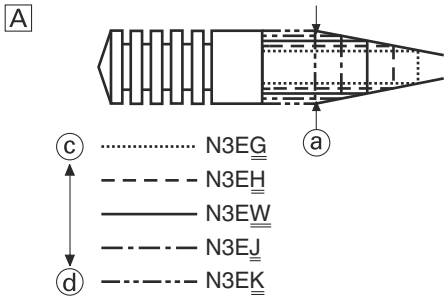

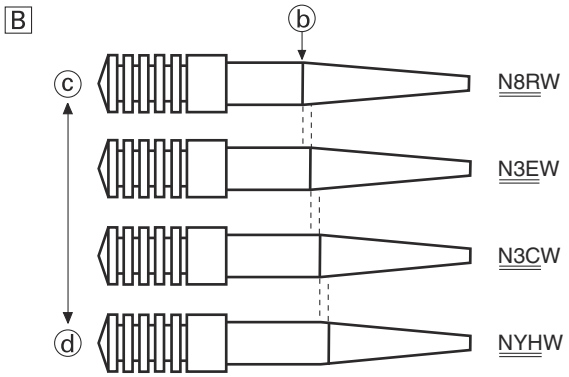

A. Difference in straight portion diameter
B. Difference in taper starting position

a. Diameter of the straight portion
b. Taper starting position
c. Rich
d. Lean

2. Effects of changing the jet needle (reference)
   - Diameter of straight portion
     Changing the diameter of the straight portion adjusts the air-fuel mixture when the throttle is 1/8 to 1/4 open.
   - Taper starting position
     Changing the taper starting position produces the same effect as changing the clip position by 0.5 groove.
     Example:
     In case of being 0.5 groove leaner in relation to N3EW-3rd groove, choose N3CW-3rd groove.

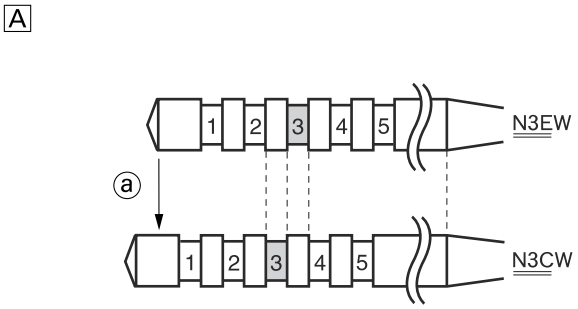

A. In case of being 0.5 groove leaner in relation to N3EW-3rd groove.

a. Difference of 0.5 groove

EAM30598

JET NEEDLE GROOVE POSITION ADJUSTMENT

Should the engine be hard to run smoothly at intermediate speeds, the jet needle "1" must be adjusted. If the mixture is too rich or too lean at intermediate speed operation, irregular engine operation and poor acceleration will result.
Whether or not the richness of the mixture is proper is hard to be determined by means of the spark plug and therefore, it should be judged from your feeling of actual engine operation.

Standard clip position	No. 2 groove

1. Too rich at intermediate speeds
   Rough engine operation is felt and the engine will not pick up speed smoothly.
   In this case, step up the jet needle clip by one groove and move down the needle to lean out the mixture.
2. Too lean at intermediate speeds
   The engine breathes hard and will not pick up speed quickly.
   In this case, step down the jet needle clip by one groove and move up the needle to enrich the mixture.

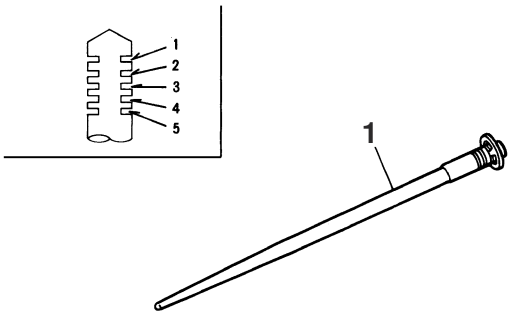

EAM30605

RELATIONSHIP WITH THROTTLE OPENING

The flow of the fuel through the carburetor main system is controlled by the main jet and then, it is further regulated by the area between the main nozzle and the jet needle. On the relationship between the fuel flow and the throttle opening, the fuel flow relates to the jet needle straight portion diameter around 1/8 to 1/4 throttle opening, whereas around 1/4 to 1/1 throttle opening it relates to the taper starting position and to the clip position.
Therefore, the fuel flow is balanced at each stage of throttle opening by the combination of the jet needle straight portion diameter, taper starting position and clip position.

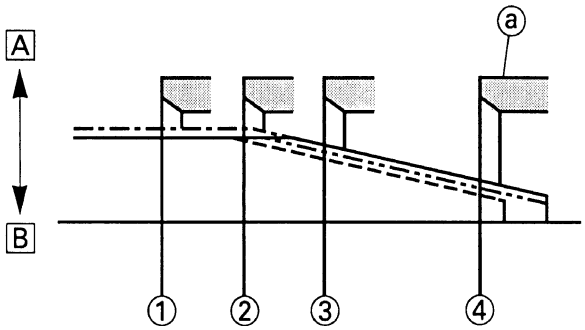

Example:

——— N3EW-3	—·—·— N3EJ-3
- - - - - - - - N3EW-4	—··—··— N8RW-3

A. Lean (larger diameter)
B. Rich (smaller diameter)

1. 1/8 throttle
2. 1/4 throttle
3. 1/2 throttle
4. 1/1 throttle

a. Main nozzle

EAM30599

CARBURETOR SETTING PARTS

Part name		Size	Part number
Main jet "1"	Rich	#190	4MX-14943-45
		#188	4MX-14943-95
		#185	4MX-14943-44
		#182	4MX-14943-94
		#180	4MX-14943-43
	(STD)	#178	4MX-14943-93
		#175	4MX-14943-42
		#172	4MX-14943-92
		#170	4MX-14943-41
		#168	4MX-14943-91
		#165	4MX-14943-40
	Lean	#162	4MX-14943-90

Part name		Size	Part number
Pilot jet “2”	Rich	#62	4MX-14948-12
		#60	4MX-14948-11
		#58	4MX-14948-10
		#55	4MX-14948-09
		#52	4MX-14948-08
	(STD)	#50	4MX-14948-07
		#48	4MX-14948-06
		#45	4MX-14948-05
		#42	4MX-14948-04
		#40	4MX-14948-03
	Lean	#38	4MX-14948-02
Jet needle “3”	Rich	N3CG	4SR-14916-CG
		N3EG	4SR-14916-EG
		NYHG	BRY-14916-HG
		N8RH	4SR-14916-RH
		N3EH	4SR-14916-EH
		N3CH	4SR-14916-CH
		NYHH	BRY-14916-HH
		N8RW	4SR-14916-RW
	(STD)	N3EW	4SR-14916-EW
		N3CW	4SR-14916-CW
		NYHW	BRY-14916-HW
		N8RJ	4SR-14916-RJ
		N3EJ	4SR-14916-EJ
		N3CJ	4SR-14916-CJ
		NYHJ	BRY-14916-HJ
		N3EK	4SR-14916-EK
	Lean	N3CK	4SR-14916-CK
Power Jet “4”	Rich	#70	4JT-1494F-15
		#65	4JT-1494F-13
		#60	4JT-1494F-11
		#55	4JT-1494F-09
	(STD)	#50	4JT-1494F-07
	Lean	#40	4JT-1494F-03

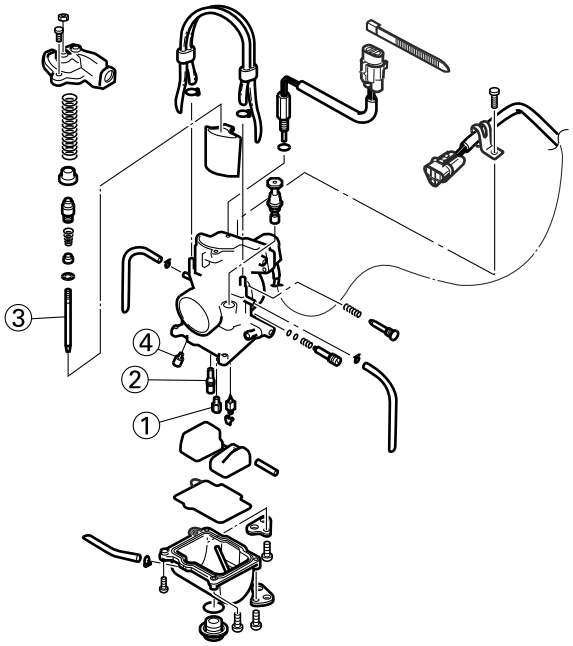

EAM30601

ROAD CONDITION AND EXAMPLES OF CARBURETOR SETTING

	General condition			Sandy condition		
	Under 10 °C (50 °F) (Winter)	15–25 °C (59–77 °F) (Spring, Autumn)	Over 25 °C (77 °F) (Summer)	Under 10 °C (50 °F) (Winter)	15–25 °C (59–77 °F) (Spring, Autumn)	Over 25 °C (77 °F) (Summer)
Main jet	#178	#178	#178	#182	#180	#178
Jet needle	N3CW-3	N3EW-2	N3EJ-2	N3CW-3	N3CW-3	N3CW-3
Pilot jet	#50	#50	#50	#52	#52	#52
Pilot air screw	-1/4	0	0	0	0	+1/4
Power jet	#50	#50	#50	#50	#50	#50

TIP

Optimum pilot air screw setting can be obtained by adding the ex-factory number of the same screw back-out turns to any required value provided in the chart. For example, if the ex-factory number is “1”, add “1” to the value chosen in the chart.

EAM30602

EXAMPLES OF CARBURETOR SETTING DEPENDING ON SYMPTOM

Symptom	Setting	Checking
• At full throttle Stall at high speeds *Hard breathing Shearing noise Whitish spark plug ↓ Lean mixture	Increase main jet calibration no. (Gradually)	• Discoloration of spark plug → If tan color, it is in good condition. • If cannot be corrected: Clogged float valve seat Clogged fuel hose Clogged fuel cock
• At full throttle Speed pick-up stops Slow speed pick-up Slow response Sooty spark plug ↓ Rich mixture	Decrease main jet calibration no. (Gradually) *In case of racing slight enrichment of mixture reduces engine trouble.	• Discoloration of spark plug → If tan color, it is in good condition. • If cannot be corrected: Clogged air filter Fuel overflow from carburetor
Lean mixture	Lower jet needle clip position. (1 groove down)	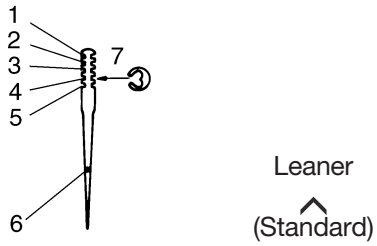 1. Groove 1 2. Groove 2 3. Groove 3 4. Groove 4 5. Groove 5 6. Jet needle 7. Clip The clip position is the jet needle groove on which the clip is installed. The positions are numbered from the top.
Rich mixture	Raise jet needle clip position. (1 groove up)	
• 1/4–3/4 throttle *Hard breathing Lack of speed	Lower jet needle clip position. (1 groove down)	
• 1/4–1/2 throttle Slow speed pick-up White smoke Poor acceleration	Raise jet needle clip position. (1 groove up)	
• Closed to 1/4 throttle *Hard breathing Speed down	Use jet needle having a smaller diameter.	
• Closed to 1/4 throttle Poor acceleration White smoke	Use jet needle with a larger diameter.	
• Unstable at low speeds Pinking noise	Lower jet needle clip position. (1 groove down) Turn in pilot air screw.	
Poor response at extremely low speed	Reduce pilot jet calibration No. Turn out pilot air screw. If not effect, reverse the above procedures.	Dragging brake Overflow from carburetor
Poor response in the low to intermediate speeds	Raise jet needle clip position. If no effect, reverse the above procedures.	

Symptom	Setting	Checking
Poor response when throttle is opened quickly	Check overall settings. Use main jet having lower calibration No. Raise jet needle clip position. (1 groove up) If no effect, reverse the above procedures.	Check air filter for fouling.
Poor engine operation	Turn in pilot air screw.	Check throttle valve operation.

* marked: In case of hard breathing, check the carburetor breather hoses for clogging.

This should be taken simply for an example. It is necessary to set the carburetor while checking the operating conditions of the engine and discoloration of spark plugs.

Normally, carburetor setting is made by means of the main jet, jet needle clip position, pilot jet and pilot air screw.

EAM30603

CHANGE OF THE HEAT RANGE OF SPARK PLUGS

Judging from the discoloration of spark plugs, if they are found improper, it can be corrected by the following two methods; changing carburetor settings and changing the heat range of spark plug.

Standard spark plug	**BR8EG (resistance type)**

- In principle, it is advisable to first use spark plugs of standard heat range, and judging from the discoloration of spark plugs, adjust carburetor settings.
- If the calibration No. of the main jet must be changed by ±15, it is advisable to change the heat range of spark plugs and newly select the proper main jet.

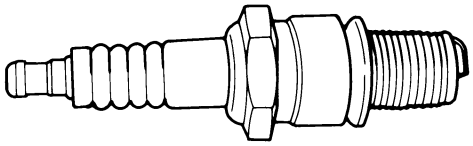

TIP

- When checking the discoloration of spark plugs, be sure to stop the engine immediately after a run and check.
- Avoid racing.
- When changing the heat range of spark plugs, never attempt to change it more than ±1 rank.
- When using a spark plug other than standard, check its heat range against the standard and check that it is a resistance type.
- Note that even if the discoloration seems proper, it may slightly vary with the spark plug maker and oil in use.

EAM20119
CHASSIS

EAM30168
SELECTION OF THE SECONDARY REDUCTION RATIO (SPROCKET)

Secondary reduction ratio = Number of rear wheel sprocket teeth/Number of drive sprocket teeth

Secondary reduction ratio
3.571 (50/14)

<Requirement for selection of secondary gear reduction ratio>

- It is generally said that the secondary gear ratio should be reduced for a longer straight portion of a speed course and should be increased for a course with many corners. Actually, however, as the speed depends on the ground condition of the day of the race, be sure to run through the circuit to set the machine suitable for the entire course.
- In actuality, it is very difficult to achieve settings suitable for the entire course and some settings may be sacrificed. Thus, the settings should be matched to the portion of the course that has the greatest effect on the race result. In such a case, run through the entire course while making notes of lap times to find the best balance; then, determine the secondary reduction ratio.
- If a course has a long straight portion where a machine can run at maximum speed, the machine is generally set such that it can develop its maximum revolutions toward the end of the straight line, with care taken to avoid the engine over-revving.

TIP

Riding technique varies from rider to rider and the performance of a machine also vary from machine to machine. Therefore, do not imitate other rider's settings from the beginning but choose your own setting according to the level of your riding technique.

EAM30169
DRIVE AND REAR WHEEL SPROCKETS SETTING PARTS

Part name		Type	Part number
Drive sprocket "1"		13T	9383E-13216
	(STD)	14T	9383E-14215
Rear wheel sprocket "2"		47T	17D-25447-50
		48T	17D-25448-50
		49T	B2W-25449-00
	(STD)	50T	B2W-25450-00
		51T	B2W-25451-00
		52T	17D-25452-50

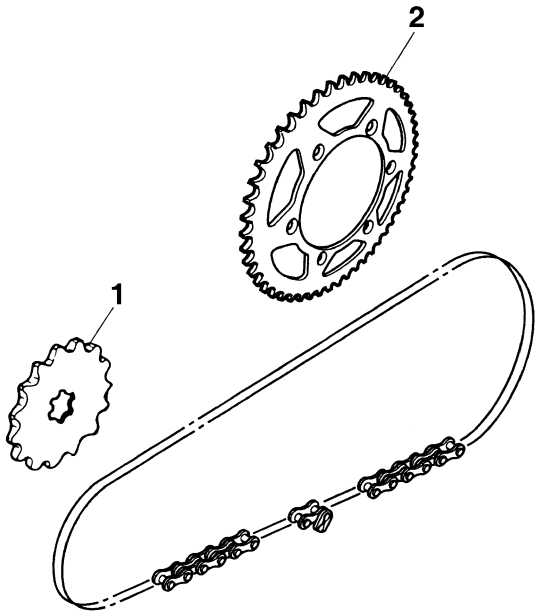

EAM30170
TIRE PRESSURE

Tire pressure should be adjusted to suit the road surface condition of the circuit.

Standard tire pressure
100 kPa (1.00 kgf/cm^2, 15 psi)

- Under a rainy, a muddy, a sandy, or a slippery condition, the tire pressure should be lower for a larger area of contact with the road surface.

Extent of adjustment
60–80 kPa (0.60–0.80 kgf/cm^2, 9–12 psi)

- Under a stony or a hard road condition, the tire

pressure should be higher to prevent a flat tire.

Extent of adjustment
100–120 kPa (1.00–1.20 kgf/cm², 15–18 psi)

EAM30171

FRONT FORK SETTING

The front fork setting should be made depending on the rider's feeling of an actual run and the circuit conditions.
The front fork setting includes the following three factors:

1. Setting of air spring characteristics
   - Change the fork oil amount.
2. Setting of spring preload
   - Change the spring.
3. Setting of damping force
   - Change the compression damping force.
   - Change the rebound damping force.
     The spring acts on the load and the damping force acts on the cushion travel speed.

EAM30172

CHANGE IN AMOUNT AND CHARACTERISTICS OF FORK OIL

Damping characteristic near the final stroke can be changed by changing the fork oil amount.

EWA19190

WARNING

Adjust the oil amount in 5 cm³ (0.2 US oz, 0.2 Imp.oz) increments or decrements. Too small oil amount causes the front fork to produce a noise at full rebound or the rider to feel some pressure on his hands or body. Alternatively, too large oil amount will cause the air spring characteristics to have a tendency to be stiffer with the consequent deteriorated performance and characteristics. Therefore, adjust the front fork within the specified range.

Recommended oil
Yamaha Suspension Oil S1
Standard oil amount
310 cm³ (10.5 US oz, 10.9 Imp.oz)
Extent of adjustment
290–365 cm³ (9.8–12.3 US oz, 10.2–12.9 Imp.oz)

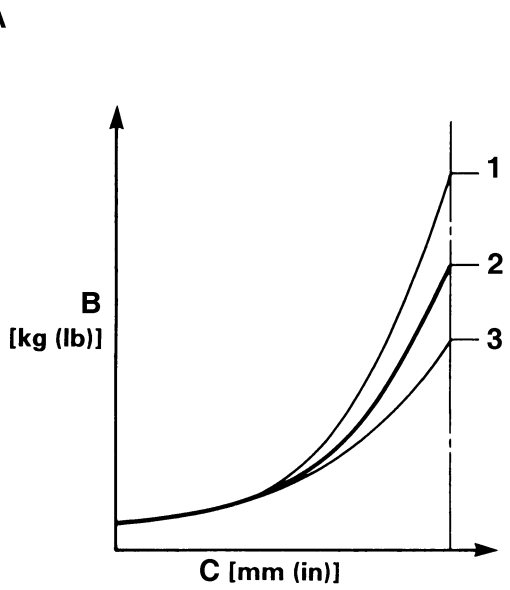

A. Air spring characteristics in relation to oil amount change
B. Load
C. Stroke

1. Max. oil amount
2. Standard oil amount
3. Min. oil amount

EAM30173

SETTING OF SPRING AFTER REPLACEMENT

As the front fork setting can be easily affected by the rear suspension, take care so that the front and the rear are balanced (in position etc.) when setting the front fork.

1. Use of soft spring
   - Change the rebound damping force.
     Turn out one or two clicks.
   - Change the compression damping force.
     Turn in one or two clicks.

TIP

Generally a soft spring gives a soft riding feeling. Rebound damping tends to become stronger and the front fork may sink deeply over a series of gaps.

2. Use of stiff spring
   - Change the rebound damping force.
     Turn in one or two clicks.
   - Change the compression damping force.
     Turn out one or two clicks.

TIP

Generally a stiff spring gives a stiff riding feeling. Rebound damping tends to become weaker, resulting in lack of a sense of contact with the road surface or in a vibrating handlebar.

EAM30174

FRONT FORK SETTING PARTS

- Front fork spring

STD spring rate N/mm	4.4

Type	Spring rate N/mm	Part number	I.D. mark (slits)
SOFT	3.9	BRY-23141-00	I
↑	4.0	BRY-23141-10	II
	4.1	B3J-23141-10	III
	4.2	B3J-23141-20	IIII
	4.3	B3J-23141-30	IIIII
	4.4	B3J-23141-40	I-I
	4.5	BR9-23141-20	I-II
	4.6	BR9-23141-30	I-III
	4.7	BR9-23141-40	I-IIII
	4.8	BR9-23141-50	I-IIIII
	4.9	BR9-23141-60	II-II
↓	5.0	BR9-23141-70	II-III
STIFF	5.1	BR9-23141-80	II-IIII

TIP

The I.D. mark (slits) is proved on the end of the spring.

EAM30175

REAR SUSPENSION SETTING

The rear shock absorber setting should be made depending on the rider's feeling of an actual run and the circuit conditions.

The rear suspension setting includes the following two factors:

1. Setting of spring preload
   - Change the set length of the spring.
   - Change the spring.
2. Setting of damping force
   - Change the rebound damping force.
   - Change the compression damping force.

EAM30176

CHOOSING SET LENGTH

1. Place a stand or a block under the engine to put the rear wheel above the floor, and measure the length "a" between the rear wheel axle center and "△" mark of rear fender.

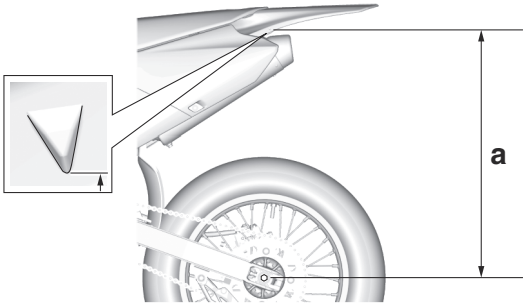

2. Remove the stand or block from the engine and, with a rider astride the seat, measure the sunken length "b" between the rear wheel axle center and "△" mark of rear fender.

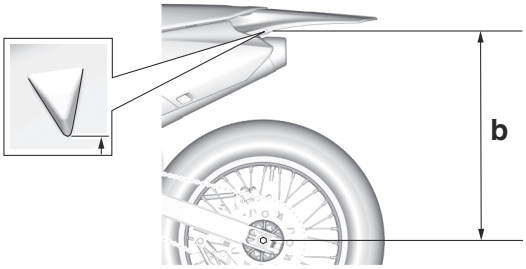

3. Loosen the locknut "1" and make adjustment by turning the adjuster "2" to achieve the standard figure from the subtraction of the length "b" from the length "a".

	Standard figure **90–100 mm (3.5–3.9 in)**

TIP

- If the machine is new and after it is broken in, the same set length of the spring may change because of the initial fatigue, etc. of the spring. Therefore, be sure to make reevaluation.
- If the standard figure cannot be achieved by adjusting the adjuster and changing the set length, replace the spring with an optional one and make readjustment.

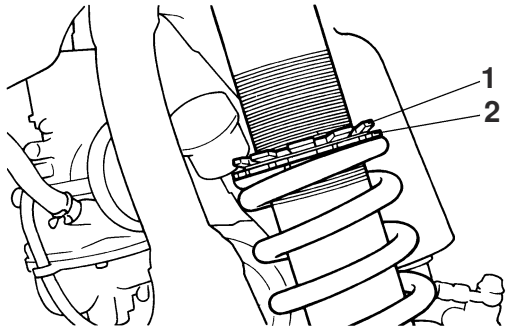

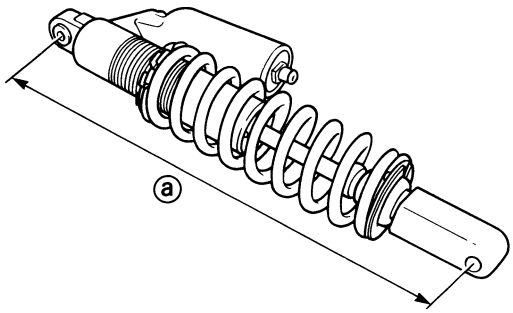

EAM30177

SETTING OF SPRING AFTER REPLACEMENT

After replacement, be sure to adjust the spring to the set length [sunken length 90–100 mm (3.5–3.9 in)] and set it.

1. Use of soft spring
   - Adjust to decrease rebound damping force to compensate for less spring load. Run with the rebound damping force adjuster one or two clicks turned out, and readjust it to suit your preference.
2. Use of stiff spring
   - Adjust to increase rebound damping force to compensate for greater spring load. Run with the rebound damping force adjuster one or two clicks turned in, and readjust it to suit your preference.

TIP

Adjusting the rebound damping force will be followed more or less by a change in the compression damping force. For correction, adjust to decrease compression damping force.

EWA19200

WARNING

When using a rear shock absorber other than currently installed, use the one whose overall length "a" does not exceed the standard as it may result in faulty performance. Never use one whose overall length is greater than standard.

	Length "a" of standard shock 490 mm (19.29 in)

EAM30178

REAR SHOCK ABSORBER SETTING PARTS

- Rear shock spring "1"

[Equal-pitch steel spring]

STD spring rate N/mm	50

Type	Spring rate N/mm	Part number	I.D. mark/ Q'ty
SOFT	42	5UN-22212-00 (Silver)	Brown/1
↑	44	5UN-22212-10 (Silver)	Green/1
	46	5UN-22212-20 (Silver)	Red/1
	48	5UN-22212-30 (Silver)*1	Black/1
		BCR-22212-00 (Blue)*2	
	50	5UN-22212-40 (Silver)*1	Blue/1
		BCR-22212-10 (Blue)*2	Green/1
	52	5UN-22212-50 (Silver)*1	Yellow/1
		5UN-22212-L0 (Blue)*2	
↓	54	5UN-22212-60 (Silver)	Pink/1
STIFF	56	5UN-22212-70 (Silver)	White/1

*1: For D691
*2: For D695

[Unequal-pitch steel spring]

Type	Spring rate N/mm	Part number	I.D. mark/ Q'ty
SOFT	44	5UN-22212-A0 (Silver)	Green/2
↑	46	5UN-22212-B0 (Silver)	Red/2
	48	5UN-22212-C0 (Silver)	Black/2
	50	5UN-22212-D0 (Silver)	Blue/2
	52	5UN-22212-E0 (Silver)	Yellow/2
↓	54	5UN-22212-F0 (Silver)	Pink/2
STIFF	56	5UN-22212-G0 (Silver)	White/2

TIP

- The unequal-pitch spring is softer in initial characteristic than the equal-pitch spring and is difficult to bottom out under full compression.
- The I.D. mark "a" is marked at the end of the spring.
- Spring specification varies according to the color and quantity of I.D. marks.

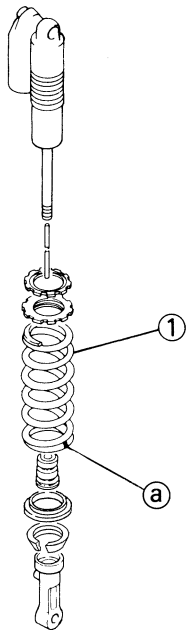

- Spring preload adjusting positions

Spring preload adjusting positions

Minimum

Position in which the spring is turned in 1.5 mm (0.06 in) from its free length.

Standard

Position in which the spring is turned in 7.0 mm (0.28 in) from its free length.

Maximum

Position in which the spring is turned in 20.5 mm (0.81 in) from its free length.

TIP

For the spring preload adjustment, refer to "ADJUSTING THE REAR SHOCK ABSORBER ASSEMBLY" on page 3-21.

EAM30179

SUSPENSION SETTING (FRONT FORK)

TIP

- If any of the following symptoms is experienced with the standard position as the base, make resetting by reference to the adjustment procedure given in the same chart.
- Before any change, set the rear shock absorber sunken length to the standard figure 90–100 mm (3.5–3.9 in).

Symptom	Section				Check	Adjust
	Jump	Large gap	Medium gap	Small gap		
Stiff over entire range	√	√	√		Compression damping force	Turn adjuster counterclockwise (about 2 clicks) to decrease damping.
					Oil amount	Decrease oil amount by about 5–10 cm^3 (0.2–0.3 US oz, 0.2–0.4 Imp.oz).
					Spring	Replace with soft spring.
Unsmooth movement over entire range	√	√	√	√	Outer tube Inner tube	Check for any bends, dents, other noticeable scars, etc. If any, replace affected parts.
					Slide metal	Replace with a new one for extended use.
					Piston metal	Replace with a new one for extended use.
					Lower bracket tightening torque	Retighten to specified torque.
Poor initial movement				√	Rebound damping force	Turn adjuster counterclockwise (about 2 clicks) to decrease damping.
					Oil seals	Apply grease in oil seal wall.
Soft over entire range, bottoming out	√	√			Compression damping force	Turn adjuster clockwise (about 2 clicks) to increase damping.
					Oil amount	Increase oil amount by about 5–10 cm^3 (0.2–0.3 US oz, 0.2–0.4 Imp.oz).
					Spring	Replace with stiff spring.
Stiff toward stroke end	√				Oil amount	Decrease oil amount by about 5 cm^3 (0.2 US oz, 0.2 Imp.oz).
Soft toward stroke end, bottoming out	√				Oil amount	Increase oil amount by about 5 cm^3 (0.2 US oz, 0.2 Imp.oz).
Stiff initial movement	√	√	√	√	Compression damping force	Turn adjuster counterclockwise (about 2 clicks) to decrease damping.

Symptom	Section				Check	Adjust
	Jump	Large gap	Medi-um gap	Small gap		
Low front, tending to lower front posture			√	√	Compression damping force Rebound damping force Balance with rear end Oil amount	Turn adjuster clockwise (about 2 clicks) to increase damping. Turn adjuster counterclockwise (about 2 clicks) to decrease damping. Set sunken length for 95–100 mm (3.7–3.9 in) when one passenger is astride seat (lower rear posture). Increase oil amount by about 5 cm^3 (0.2 US oz, 0.2 Imp.oz).
"Obtrusive" front, tending to upper front posture			√	√	Compression damping force Balance with rear end Spring Oil amount	Turn adjuster counterclockwise (about 2 clicks) to decrease damping. Set sunken length for 90–95 mm (3.5–3.7 in) when one passenger is astride seat (upper rear posture). Replace with soft spring. Decrease oil amount by about 5–10 cm^3 (0.2–0.3 US oz, 0.2–0.4 Imp.oz).

EAM30180

SUSPENSION SETTING (REAR SHOCK ABSORBER)

TIP

- If any of the following symptoms is experienced with the standard position as the base, make resetting by reference to the adjustment procedure given in the same chart.
- Adjust the rebound damping in 2-click increments or decrements.
- Adjust the low compression damping in 1-click increments or decrements.
- Adjust the high compression damping in 1/6 turn increments or decrements.

Symptom	Section				Check	Adjust
	Jump	Large gap	Medi-um gap	Small gap		
Stiff, tending to sink			√	√	Rebound damping force Spring set length	Turn adjuster counterclockwise (about 2 clicks) to decrease damping. Set sunken length for 90–100 mm (3.5–3.9 in) when one passenger is astride seat.
Spongy and unstable			√	√	Rebound damping force Low compression damping Spring	Turn adjuster clockwise (about 2 clicks) to increase damping. Turn adjuster clockwise (about 1 click) to increase damping. Replace with stiff spring.

Symptom	Section				Check	Adjust
	Jump	Large gap	Medi-um gap	Small gap		
Heavy and drag-ging			√	√	Rebound damp-ing force	Turn adjuster counterclockwise (about 2 clicks) to decrease damp-ing.
					Spring	Replace with soft spring.
Poor road grip-ping				√	Rebound damp-ing force	Turn adjuster counterclockwise (about 2 clicks) to decrease damp-ing.
					Low compression damping	Turn adjuster clockwise (about 1 click) to increase damping.
					High compres-sion damping	Turn adjuster clockwise (about 1/6 turn) to increase damping.
					Spring set length	Set sunken length for 90–100 mm (3.5–3.9 in) when one passenger is astride seat.
					Spring	Replace with soft spring.
Bottoming out	√	√			High compres-sion damping	Turn adjuster clockwise (about 1/6 turn) to increase damping.
					Spring set length	Set sunken length for 90–100 mm (3.5–3.9 in) when one passenger is astride seat.
					Spring	Replace with stiff spring.
Bouncing	√	√			Rebound damp-ing force	Turn adjuster clockwise (about 2 clicks) to increase damping.
					Spring	Replace with soft spring.
Stiff travel	√	√			High compres-sion damping	Turn adjuster counterclockwise (about 1/6 turn) to decrease damping.
					Spring set length	Set sunken length for 90–100 mm (3.5–3.9 in) when one passenger is astride seat.
					Spring	Replace with soft spring.

EAM20160

For your best ownership experience, think **Genuine Yamaha!**

Genuine Yamaha Parts – Genuine Yamaha replacement parts are the exact same parts as the ones originally equipped on your vehicle, providing you with the performance and durability you have come to expect. Why settle for aftermarket parts that may not provide full confidence and satisfaction?

Genuine Yamaha Accessories – Yamaha only offers accessories that meet our high standards for quality and performance. Buy with confidence, knowing your Genuine Yamaha Accessories will fit right and perform right – right out of the box.

Yamalube – Take care of your Yamaha with legendary Yamalube oils, lubricants, and care products. They're formulated and approved by the toughest judges we know: the Yamaha engineering teams that know your Yamaha from the inside out.

Genuine Yamaha Service Manuals – Get the same factory manual for your vehicle that the technicians at your authorized Yamaha dealer use. Service manuals are available through your Yamaha dealer or you can order them directly through yamahapubs.com.

Genuine Yamaha products are available only from your Yamaha dealer.

Find out more at yamaha-motor.com

YAMAHA